AMENDED PRELIMINARY - FINAL LAND DEVELOPMENT PLANS

OF

Centennial Apartments

A RESIDENTIAL COMMUNITY IN

SCHWENKSVILLE BOROUGH, MONTGOMERY COUNTY, PA

PREPARED FOR

HOFF PROPERTIES, LLC

362 WINSLOW DRIVE

SOUDERTON, PA 18964

COMPLETE LIST OF PLAN REVISIONS

THIS DRAWING IS NOT TO BE USED FOR CONSTRUCTION UNLESS STAMPED: "ISSUED FOR CONSTRUCTION"

No.	REVISION	DATE
11	REVISED PER BOROUGH EMAIL COMMENTS (10/09/18)	OCTOBER 24, 2018
10	REVISED PER BOROUGH EMAIL COMMENTS (07/06/18) & 07/09/18)	AUGUST 16, 2018
9	REVISED PER BOROUGH LTR. (12/20/17), SEWER AUTH. LTR. (01/31/18)	JUNE 5, 2018
8	REVISED PER MCCD TECHNICAL REVIEW (03/12/18)	MAY 4, 2018
7	REVISED PER MCCD ADMINISTRATIVE INCOMPLETENESS REVIEW (01/09/18)	JANUARY 16, 2018
6	PREPARATION FOR NPDES SUBMISSION	DECEMBER 8, 2017
5	REVISED PER BOROUGH LTR. (11/28/16), SEWER AUTH. LTR. (12/01/16)	NOVEMBER 3, 2017
4	COMBINE UNITS INTO SINGLE BUILDING & REVISE UTILITIES	SEPTEMBER 18, 2017
3	PREPARATION FOR NPDES SUBMISSION	DECEMBER 23, 2016
2	REVISED PER SEWER AUTH. LTR. (08/09/16, TREE LOCATION/OFFSITE SURVEY)	OCTOBER 26, 2016
1	REVISED PER BOROUGH LTR. (07/28/16), SEWER AUTH. LTR. (08/03/16)	AUGUST 8, 2016
	PLAN ORIGINATION DATE	

Sheet Index

Sheet No.	Description
0	COVER SHEET
1	AMENDED PRELIMINARY - FINAL LAND DEVELOPMENT PLAN
2	EXISTING FEATURES PLAN
3	STORM SEWER AND GRADING PLAN
4	SANITARY SEWER AND WATER FACILITIES PLAN
5	LANDSCAPING PLAN
6	LIGHTING PLAN
7	PLAN AND PROFILE FOREST LANE
8	PLAN AND PROFILE PROPOSED DRIVE
9	MISCELLANEOUS PROFILES
10	MISCELLANEOUS PROFILES
11	HANDICAP RAMP DETAILS
12	POST-CONSTRUCTION STORMWATER MANAGEMENT PLAN
13	POST-CONSTRUCTION STORMWATER MANAGEMENT PLAN
14	PCSM NOTES & DETAILS
15	EROSION AND SEDIMENTATION CONTROL PLAN
16	E & S CONTROL DETAILS
17	E & S CONTROL DETAILS
18	SITE IMPROVEMENT DETAILS
19	SITE IMPROVEMENT DETAILS
20	SANITARY SEWER DETAILS
21	PRE-DEVELOPMENT DRAINAGE SHED PLAN
22	POST-CONSTRUCTION DRAINAGE SHED PLAN

Site Location Map 1"=1000'

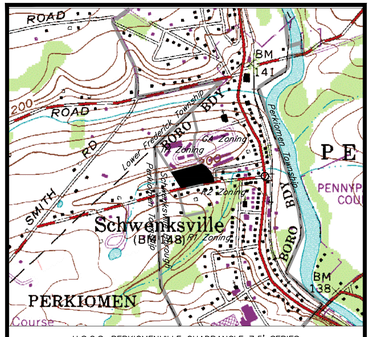

U.S.G.S. PERKIOMENVILLE QUADRANGLE 7.5' SERIES
SCALE: 1"=1000'

Richard C. Mast Associates, P.C.
Consulting Engineers and Surveyors
The Village at Lederach
658 Harleysville Pike, Suite 150
Harleysville, Pennsylvania 19438
Phone: (215) 513-2100
Fax: (215) 513-2101

SITE LOCATION MAP

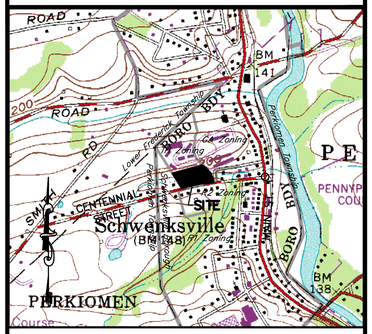

U.S.G.S. PERKIOMENVILLE QUADRANGLE 7.5' SERIES
SCALE: 1"=1000'

GENERAL NOTES

1. TITLE LINE INFORMATION TAKEN FROM A PLAN OF SURVEY PREPARED FOR JEFFREY L. CLEMENS BY URWILER & WALTER, INC. DATED MAY 24, 1993, AND LAST REVISED FEBRUARY 5, 1998. SEE ALSO FOREST LANE RIGHT-OF-WAY NOTES BLOCK HEREON.
2. TOPOGRAPHIC AND ELEVATION INFORMATION TAKEN FROM A LAND DEVELOPMENT PLAN BY STOUT, TACCONELLI & ASSOCIATES, INC. DATED JUNE 2, 1997 AND LAST REVISED NOVEMBER 5, 2001, AND SUPPLEMENTAL FIELD MEASUREMENTS BY RICHARD C. MAST ASSOCIATES, IN AUGUST 2016.
3. NO PART OF THE SUBJECT TRACT IS LOCATED WITHIN A 100-YEAR FLOOD PLAIN BASED ON THE FLOOD INSURANCE RATE MAP (PANEL NO. 42091C0114 G, MAP EFFECTIVE MARCH 2, 2016) PUBLISHED BY THE FEDERAL EMERGENCY MANAGEMENT AGENCY.
4. WATERS OF THE COMMONWEALTH (NOT INCLUDING WETLANDS) SHOWN HEREON WERE DELINEATED BY DEL-VAL SOIL AND ENVIRONMENTAL CONSULTANTS, INC. AUGUST 19, 2014.
5. ALL PROPOSED UNITS WILL BE SERVED WITH POTABLE WATER AND SANITARY SEWER DISPOSAL SERVICES PROVIDED BY THE SCHWENKSVILLE BOROUGH AUTHORITY. ALL PROPOSED FACILITIES ARE TO BE PRIVATELY OWNED AND OPERATED.
6. A CLEAR SIGHT TRIANGLE, ORIGINATING FROM THE INTERSECTION OF THE PROPOSED DRIVEWAY WITH FOREST LANE, SHALL BE MAINTAINED IN ACCORDANCE WITH CHAPTER 147, ARTICLE IV, SECTION 147-27 AND CHAPTER 176, ARTICLE XIX, SECTION 176-137.
7. THE AREA BETWEEN THE TITLE LINES AND ULTIMATE RIGHT-OF-WAY LINES FOR CENTENNIAL STREET AND FOREST LANE ARE HEREBY OFFERED FOR DEDICATION TO SCHWENKSVILLE BOROUGH OR OTHER GOVERNMENTAL BODY HAVING JURISDICTION AT THE TIME OF RECORDING.
8. AN ENCLOSED AND SCREENED CENTRAL TRASH DISPOSAL AREA IS PROPOSED.
9. MAIL DELIVERY FOR ALL UNITS TO BE VIA CLUSTER BOX UNIT (CBU) AND OUTDOOR PARCEL LOCKER MEETING THE SPECIFICATIONS AND STANDARDS OF THE U.S.P.S. (PUBLICATION 265-A, OCT. 2013). SALSBURY INDUSTRIES MODELS #3316 CBU AND #3302 LOCKER, OR APPROVED EQUALS. COLOR AND APPURTENANCES TO BE SELECTED BY OWNER.
10. A COMPREHENSIVE SYSTEM OF ADDRESS IDENTIFICATION SHALL BE PROVIDED FOR THE BUILDING/UNITS AND APPROVED BY THE BOROUGH. UNIT DESIGNATIONS FOR ALL UNITS SHOULD BE CLEARLY DISPLAYED IN PLAIN VIEW FOR BOTH VISITORS AND EMERGENCY SERVICES.
11. NO PLANTINGS OR STRUCTURES SHALL BE LOCATED WITHIN SANITARY SEWER, WATER, OR STORM SEWER EASEMENTS OR WITHIN 10 FEET OF THE SANITARY SEWERS, SEWER LATERALS, WATER MAINS, AND WATER LATERALS.
12. THE PROPOSED 20' WIDE SANITARY SEWER EASEMENT IS HEREBY OFFERED TO THE SCHWENKSVILLE BOROUGH AUTHORITY FOR DEDICATION. UPON COMPLETION OF CONSTRUCTION AND ACCEPTANCE, THE SANITARY MAIN FROM MH 101 TO MH 102 AND BOTH MANHOLES, CONTAINED WITHIN THE EASEMENT, WILL BE OFFERED TO THE SCHWENKSVILLE BOROUGH AUTHORITY FOR DEDICATED. ALL LATERALS AND APPURTENANCES WILL BE PRIVATELY OWNED AND MAINTAINED BY THE PROPERTY OWNER.
13. THE PROPOSED 20' WIDE WATER FACILITIES EASEMENT IS HEREBY OFFERED TO THE SCHWENKSVILLE BOROUGH AUTHORITY FOR DEDICATION. UPON COMPETITION AND ACCEPTANCE, THE WATER MAIN FROM THE PROPOSED TAP TO THE SECOND VALVE AND THE HYDRANT WILL BE OFFERED TO THE SCHWENKSVILLE BOROUGH AUTHORITY FOR DEDICATED. THE REMAINDER OF WATER MAIN BEYOND THE SECOND VALVE (OUTSIDE THE EASEMENT) AND SERVICE LINES WILL BE PRIVATELY OWNED AND MAINTAINED BY THE PROPERTY OWNER
14. ALL UTILITIES SHALL BE PROVIDED BY UNDERGROUND SERVICE.
15. STREET LIGHTS PROPOSED ALONG CENTENNIAL STREET AND AT THE CENTENNIAL STREET/FOREST LANE INTERSECTION SHALL BE INSTALLED BY THE DEVELOPER/OWNER AND OWNED/MAINTAINED/ENERGIZED BY SCHWENKSVILLE BOROUGH.
16. WRITTEN PERMISSION HAS BEEN OBTAINED FROM THE OWNER OF BLOCK 03A / UNIT 45 (HIGH POINTE HOMEOWNERS ASSOCIATION) AND PROVIDED TO SCHWENKSVILLE BOROUGH FOR THE REMOVAL AND RESTORATION OF THE EXISTING FOUNDATION AND RETAINING WALLS CROSSING THE COMMON PROPERTY LINE.
17. AFTER CONSTRUCTION, IT IS THE RESPONSIBILITY OF THE DEVELOPER TO SUPPLY RECORD DRAWINGS TO THE SCHWENKSVILLE BOROUGH AUTHORITY'S ENGINEER FOR REVIEW AND APPROVAL.

STEEP SLOPES CALCULATIONS

Slope Range	Area of On-site Resource * (s.f.)	Permitted Disturbance (%)	Proposed Disturbance (s.f.)	Proposed Disturbance (%)
20%-30%	10,479	25%	4,080	38.9%
30% and greater	9,801	10%	802	8.2%

* MAN-MADE SLOPES HAVE BEEN EXCLUDED FROM CALCULATIONS AS PER ZO. 176-95.2.A(3)
STEEP SLOPE RANGES AND DISTURBANCE VALUES AS PER ZO. 176-95.2.A & B
NOTE: PROPOSED STEEP SLOPE DISTURBANCE GREATER THAN THE PERMITTED LIMITS, BUT LESS THAN 40%, MAY BE CONSIDERED AS A CONDITIONAL USE.

ZONING DATA

REQUIRED INFORMATION OBTAINED FROM THE SCHWENKSVILLE ZONING ORDINANCE OF 1993, AS AMENDED, CHAPTER 176, ARTICLE V.
ZONING DISTRICT: **GA GARDEN APARTMENT DISTRICT**
EXISTING USE: VACANT
PROPOSED USE: APARTMENT HOUSES

	REQUIRED	PROPOSED
MIN. LOT AREA:	2.0 Ac.	2.4539 Ac.
MIN. LOT WIDTH @ BUILDING LINE:	500 ft./Bldg.	241.3 Ft. *
MIN. LOT AREA PER DWELLING UNIT:	4,000 S.F.	3,817 S.F. *
MAX. BUILDING COVERAGE:		
1 STORY	45%	N/A
2 STORY	35%	N/A
3 STORY	25%	11.2%
MIN. SETBACK FROM STREETS:	60 Ft.	68.6 Ft.
MIN. SETBACK FROM PROPERTY LINES:	40 Ft.	81.1 Ft.
MIN. DISTANCE BETWEEN BUILDINGS:		
1 1/2 THE HEIGHT OF THE TALLER BUILDING:	N/A	N/A
MAX. BUILDING HEIGHT:	35 Ft.	< 35 Ft.
MIN. PARKING AREA SETBACK FROM PROP. LINES AND R/W:	20 Ft.	25.4 Ft.

*VARIANCE GRANTED

LOT AREA CALCULATION

FEATURE	AREA (AC.)
TRACT AREA (TO TITLE LINE)	2.6763
LESS LEGAL R/W	(0.1072)
LESS PROP. ULT. R/W (CENTENNIAL ST.)	(0.0636)
LESS PROP. ULT. R/W (FOREST LN.)	(0.0516)
EQUALS LOT AREA=	2.4539

NOTE: ULTIMATE R/Ws ARE PROPOSED AT 50 FT FROM ESTABLISHED EXISTING R/WS (25'+/- FROM CL).

IMPERVIOUS COVERAGE

IMPERVIOUS SURFACE	AREA (S.F.)
EXISTING (TO REMAIN)	0
PROPOSED BUILDING(S)	12,000
PROPOSED DRIVEWAY/PARKING	19,270
PROPOSED WALKWAYS	2,440
PROPOSED PAVILLION	288
TOTAL IMPERVIOUS SURFACE COVERAGE=	33,998

NOTE: AREAS CALCULATED TO ULT/ R/W

GRANTED ZONING RELIEF

AT A PUBLIC HEARING HELD JUNE 23, 2014, THE SCHWENKSVILLE BOROUGH ZONING HEARING BOARD GRANTED VARIANCES FROM SECTION 176-24.A, 176-24.E, AND 176-95.4 OF THE ZONING ORDINANCE TO ALLOW THE DEVELOPMENT AND CONSTRUCTION OF 2, 3 STORY GARDEN APARTMENT BUILDINGS CONTAINING 14 APARTMENT UNITS EACH. RELIEF WAS GRANTED WITH THE FOLLOWING CONDITIONS:

1. *APPLICANT SHALL COMPLY WITH STATE, COUNTY AND LOCAL CODES REGARDING THE CONSTRUCTION OF THE 2 GARDEN APARTMENT BUILDINGS.*
2. *APPLICANT SHALL OBTAIN PERMITS AND APPROVALS FROM THE BOROUGH OF SCHWENKSVILLE AND THE STATE PRIOR TO CONSTRUCTION OR ANY DEVELOPMENT OF THE SITE.*
3. *APPLICANT SHALL INSTALL SIDEWALKS ALONG FOREST LANE.*
4. *APPLICANT SHALL INSTALL A FIRE HYDRANT IN A LOCATION ACCEPTABLE TO THE BOROUGH FIRE MARSHALL.*
5. *APPLICANT SHALL TAKE RESPONSIBILITY FOR THE MAINTENANCE OF THE FOREST LANE CULVERT.*
6. *APPLICANT SHALL MEET ALL OTHER RULES, REGULATIONS, CODES AND ORDINANCES FOR THE CONSTRUCTION, MAINTENANCE AND OPERATION OF A PRIVATE SEWAGE HOLDING TANK SYSTEM (IF APPLICABLE).*

GRANTED CONDITIONAL USE

38.9% OF STEEP SLOPES 20% TO 30% ARE PROPOSED TO BE DISTURBED, WHEREAS 25% IS PERMITTED.

AT A PUBLIC HEARING HELD JANUARY 12, 2017, THE SCHWENKSVILLE BOROUGH COUNCIL GRANTED A CONDITIONAL USE PURSUANT TO SECTION 176-95.2.B(1)(b) OF THE ZONING ORDINANCE TO PERMIT THE DISTURBANCE OF STEEP SLOPES GREATER THAN THE PERMITTED LIMITS, BUT LESS THAN FORTY PERCENT. RELIEF WAS GRANTED WITH THE FOLLOWING CONDITIONS:

1. *APPLICANT SHALL OBTAIN ALL PERMITS REQUIRED FROM SCHWENKSVILLE BOROUGH.*
5. *APPLICANT SHALL COMPLY WITH ALL BOROUGH ORDINANCES AND REGULATIONS, INCLUDING THOSE GOVERNING SIGNAGE AND LIGHTING, AS WELL AS ALL APPLICABLE COUNTY AND STATE REGULATIONS; AND.*
6. *APPLICANT SHALL STRICTLY COMPLY WITH THE TESTIMONY AND EVIDENCE PRESENTED AT THE CONDITIONAL USE HEARING.*

FOREST LANE R/W NOTES

1. THE FOREST LANE RIGHT-OF-WAY WAS DEDICATED TO SCHWENKSVILLE BOROUGH BY DEED OF DEDICATION EXECUTED JANUARY 15, 2010, RECORDED ON MAY 21, 2010, BY INSTRUMENT 2010041774, IN DEED BOOK 5767 PAGES 1958 TO 1967.1. THE FOREST LANE RIGHT-OF-WAY AREA WAS ESTABLISHED FROM THE FOLLOWING LEGAL DESCRIPTION AND EXHIBIT PLAN:

   "ROADWAY EASEMENT ACROSS APN 20-00-00059-099" LEGAL DESCRIPTION, PREPARED BY CARROLL ENGINEERING CORPORATION, DATED OCTOBER 19, 2009, AND LAST REVISED DECEMBER 9, 2009.

   "ROADWAY EASEMENT EXHIBIT", PREPARED BY CARROLL ENGINEERING CORPORATION, DATED OCTOBER 15, 2009, AND LAST REVISED DECEMBER 9, 2009.
2. A DEED OF CORRECTION WAS PREPARED FOR THE DEDICATED FOREST LANE RIGHT-OF-WAY AREA AND RECORDED ON JULY 6, 2018 IN DEED BOOK 6097 PAGE 01015. THE REVISED RIGHT-OF-WAY AREA FOR FOREST LANE WAS ESTABLISHED FROM THE FOLLOWING LEGAL DESCRIPTION:

   "ROADWAY EASEMENT ACROSS APN 20-00-00059-099" LEGAL DESCRIPTION, PREPARED BY RICHARD C. MAST ASSOCIATES, P.C., DATED OCTOBER 19, 2009, AND LAST REVISED JUNE 7, 2018.

   "ROADWAY EASEMENT EXHIBIT", PREPARED BY RICHARD C. MAST ASSOCIATES, P.C., DATED OCTOBER 15, 2009, AND LAST REVISED JUNE 7, 2018.
3. REFERENCE IS MADE TO A "PLAN OF SUBDIVISION" FOR DANIEL PELLECHIO, PREPARED BY URWILER & WALTER, INC., DATED JUNE 13, 1985.

RECORDING ACKNOWLEDGMENTS

I, **KYLE K. HOFF**, ACKNOWLEDGE MYSELF TO BE A **MEMBER** OF **HOFF PROPERTIES, LLC**, A PENNSYLVANIA LIMITED LIABILITY COMPANY, AND THAT I, AS MEMBER, BEING AUTHORIZED TO DO SO, DEPOSE AND SAY THAT **HOFF PROPERTIES, LLC** IS THE OWNER OF THE PROPERTY SHOWN ON THIS PLAN, THAT THE PLAN WAS MADE AT ITS DIRECTION, THAT IT ACKNOWLEDGES THE SAME TO BE ITS ACT AND PLAN, AND DESIRES THE SAME TO BE RECORDED, AS SUCH ACCORDING TO LAW.

HOFF PROPERTIES, LLC

_____ _____

KYLE K. HOFF, MEMBER

COMMONWEALTH OF PENNSYLVANIA)
SS:
COUNTY OF _____)

ON THIS _____ DAY OF _____, 20___, BEFORE ME, THE UNDERSIGNED OFFICER, PERSONALLY APPEARED KYLE K. HOFF, WHO ACKNOWLEDGED HIMSELF TO BE A MEMBER OF HOFF PROPERTIES, LLC, A PENNSYLVANIA LIMITED LIABILITY COMPANY, AND THAT HE AS SUCH MEMBER, BEING AUTHORIZED TO DO SO, EXECUTED THE WITHIN INSTRUMENT FOR THE PURPOSE THEREIN CONTAINED BY SIGNING THE NAME OF THE COMPANY BY HIMSELF AS MEMBER.

IN WITNESS WHEREOF, I HEREUNTO SET MY HAND AND OFFICIAL SEAL.

_____
NOTARY PUBLIC

_____
COMMISSION EXPIRATION DATE

APPROVED BY THE **SCHWENKSVILLE BOROUGH COUNCIL**, MONTGOMERY COUNTY, PENNSYLVANIA, ON THE ____ DAY OF _____, 20___.

_____ _____
PRESIDENT SECRETARY

MCPC No. **116-0148-001**
PROCESSED and REVIEWED. A report has been prepared by the Montgomery County Planning Commission in accordance with the Municipalities Planning Code.
Certified this date _____
_____
For the Director
Montgomery County Planning Commission

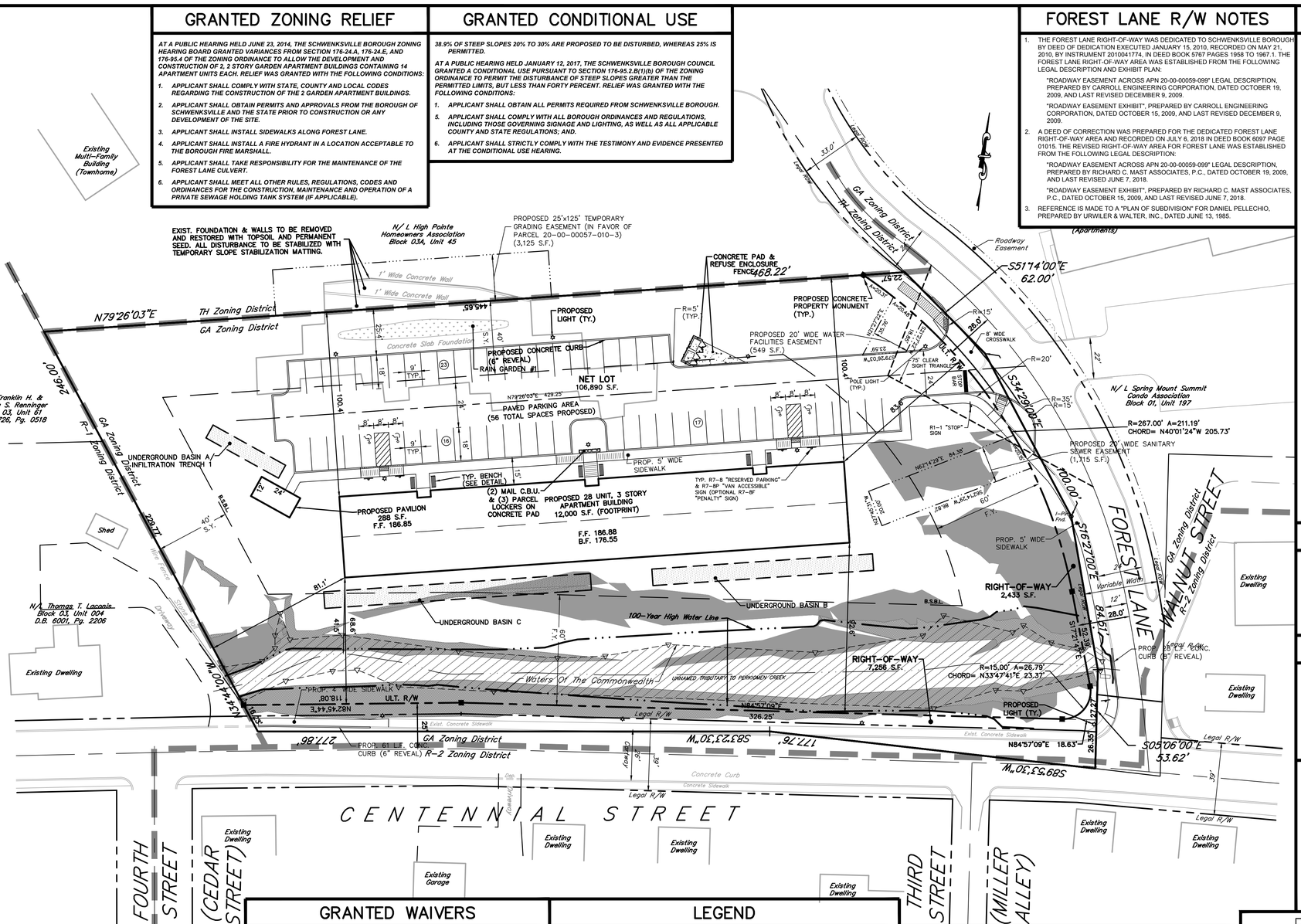

GRANTED WAIVERS

The following Waivers from the Schwenksville Borough Subdivision and Land Development Ordinance were granted in conjunction with PRELIMINARY approval of the Land Development Application at the January 12, 2017 Borough Council public meeting. (see Resolution No. 2017-05)

§147-22.B Street Classifications and Requirements
A waiver from the requirement to install road improvements along Centennial Street and Forest Lane to a 30 feet wide cartway. Centennial Street is currently 26 feet wide. Forest Lane is currently 24 feet wide.

§147-31.B(4) Parking and Driveways
A waiver from the requirement to provide a minimum 20 feet separation between buildings and adjacent spaces. A separation of 15 feet is provided.

§147-31.C(3) Parking and Driveways AND §147-39.E(2) Parking Lot Landscaping
A partial waiver from the requirement to provide a raised planting island for every 20 cars within a residential parking lot (every 15 cars for 147-39.E(2)).

§147-32.B Driveways within Sites
A waiver from the requirement to provide a 30 foot wide access drive. A 24 foot wide access drive is proposed.

§147-39.B(4) Tree Replacement Requirements
A waiver from the installation of proposed replacement trees due to insufficient room on the site.

§147-39.C(3) Street Trees
A partial waiver to permit the 12 proposed street trees along Centennial Street and 3 of the proposed street trees along Forest Lane to be planted within 5 feet of the proposed ultimate R/W.

§147-39.D(2) Buffering Plantings
A partial waiver to permit existing trees and vegetation, as well as proposed trees and shrubs to satisfy "other landscaping" requirements and to satisfy the 15 feet wide site perimeter planting buffer requirements.

GRANTED WAIVERS

The following Waivers from the Schwenksville Borough Subdivision and Land Development Ordinance were granted in conjunction with AMENDED PRELIMINARY - FINAL approval of the Land Development Application at the February 8, 2018 Borough Council public meeting. (see Resolution No. 2018-05)

§147-30 Sidewalks, Curbs, and Storm Sewers
A partial waiver from the requirement to install sidewalks along the northerly parking spaces. A connection from new internal sidewalks to Centennial Street is proposed.

§147-39.E(3) Parking Lot Landscaping
A partial waiver from installing the total number of plants required for parking lot screening (filtering buffer). 29 evergreen trees are associated with this waiver.

§147-39.F(2) AND §147-39.F(3) Additional Plantings
A waiver from the requirement to install canopy trees per square feet of lot area and for the number of proposed residential dwelling units. 25 canopy trees are associated with this waiver.

NOTE: The above waivers were granted for final approval in addition to those already granted in conjunction with the preliminary approval.

LEGEND

	EXISTING	PROPOSED
TRACT BOUNDARY		
ADJOINING PROPERTY LINE		
STREAM CENTERLINE		
STREAM		
RIGHT-OF-WAY		
CURBING		
EDGE OF ROAD		
DRIVEWAYS		
CENTERLINE		
EASEMENT		
BUILDING SETBACK LINE		
FENCE	X	X
BUFFER LINE		
ZONING LINE / TOWNSHIP BOUNDARY		
CONCRETE MONUMENT / IRON PIN		
TRAFFIC SIGN / STREET SIGN		
LIGHT POST / UTILITY POLE		
HANDICAP SYMBOL		

PARKING REQUIREMENTS

REQUIRED PARKING SPACES PER Z.O. ARTICLE XV, SECTION 176-96.

DWELLING	REQUIRED	PROPOSED
1 SPACE PER BEDROOM FOR EACH UNIT (MIN. 2 PER UNIT) 28 DWELLING UNITS X 2 SPACES (1) /UNIT =	56	56
TOTAL:	56	56

(1) ALL APARTMENTS ARE EITHER 1 OR 2 PROPOSED BEDROOM UNITS

STEEP SLOPES 20% TO 30%

STEEP SLOPES 30% AND GREATER

OWNER/APPLICANT

HOFF PROPERTIES, LLC
362 WINSLOW DRIVE
SOUDERTON, PA 18964

UNDERGROUND UTILITY NOTE

PENNSYLVANIA ONE CALL SYSTEM, INC. 1-800-242-1776 STOP, CALL BEFORE YOU DIG!

LOCATIONS OF EXISTING UTILITIES SHOWN HEREON ARE BASED ON INFORMATION RECEIVED FROM FACILITY OWNERS FOLLOWING A CALL TO PA ONE CALL SYSTEM, INC. COMPLETENESS OR ACCURACY OF TYPE, SIZE, DEPTH, OR HORIZONTAL LOCATION OF UTILITIES CANNOT BE GUARANTEED. CONTRACTORS MUST VERIFY THE LOCATION AND DEPTH OF UNDERGROUND UTILITIES BEFORE THE START OF WORK BY NOTIFYING FACILITY OWNERS, THROUGH THE PA ONE CALL SYSTEM (1-800-242-1776 OR 811), NOT LESS THAN 3 BUSINESS DAYS NOR MORE THAN 10 BUSINESS DAYS IN ADVANCE OF BEGINNING EXCAVATION OR DEMOLITION WORK PER THE REQUIREMENTS OF PA ACTS 287 AND 121, AS AMENDED.

DESIGN SERIAL NO.: 20131061391 (04-16-2013)

TAX PARCEL INFORMATION

PARCEL NO.:	20-00-00057-10-3
BLOCK/UNIT:	003A / 048
DEED:	5957-2872
PARCEL LOCATION:	CENTENNIAL STREET / FOREST LANE
ZONING DISTRICT:	GA GARDEN APARTMENTS
OWNER OF RECORD:	HOFF PROPERTIES, LLC P.O. BOX 637 SOUDERTON, PA 18964
GROSS TRACT AREA (TO TITLE LINE):	2.6763 ACRES

WETLANDS CERTIFICATION

I DO HEREBY CERTIFY THE WETLANDS DELINEATION LINE AS SHOWN ON THIS PLAN CORRECTLY REPRESENTS THE FINDINGS OF A FIELD INVESTIGATION BY ME, AND THAT THE LINE VERIFIED IN THE FIELD DURING MARCH OF 2014 IS BASED UPON THE U.S. CORPS OF ENGINEERS GUIDELINES.

_____ _____
BY: JASON J. MEASE DATE
VALLEY ENVIRONMENTAL SERVICES, INC.

30 0 15 30 60 90
DRAWING SCALE: 1"= 30 '

THIS DRAWING IS NOT TO BE USED FOR CONSTRUCTION UNLESS STAMPED: "ISSUED FOR CONSTRUCTION"

No.	REVISION	DATE
11	REVISED PER BOROUGH EMAIL COMMENTS (10/09/18)	OCTOBER 24, 2018
10	REVISED PER BOROUGH EMAIL COMMENTS (07/06/18) & 07/09/18)	AUGUST 16, 2018
9	REVISED PER BOROUGH LTR. (12/20/17), SEWER AUTH. LTR. (01/31/18)	JUNE 5, 2018
8	REVISED PER MCCD TECHNICAL REVIEW (03/12/18)	MAY 4, 2018
7	REVISED PER MCCD ADMINISTRATIVE INCOMPLETENESS REVIEW (01/09/18)	JANUARY 16, 2018
	(SEE COVER SHEET FOR COMPLETE LIST OF PLAN REVISION)	
	PLAN ORIGINATION DATE	JUNE 24, 2016

AMENDED PRELIMINARY – FINAL LAND DEVELOPMENT PLAN

AS PART OF

CENTENNIAL APARTMENTS

PREPARED FOR

HOFF PROPERTIES, LLC

SITE SITUATE IN

SCHWENKSVILLE BOROUGH, MONTGOMERY COUNTY, PA

RICHARD C. MAST ASSOCIATES, P.C. RCMA
The Village at Lederach
658 Harleysville Pike, Suite 150
Harleysville, PA 19438
(215) 513-2100

Richard C. Mast Associates, P.C.
Consulting Engineers and Surveyors
www.rcmaonline.com

DRAFTED BY	PROJ. MNGR.	PROJECT NO.	DRAWING NO.
R.A.F.	D.B.C.	2800	1 OF 22

Q:\Project Admin\2800 Series\2800 Hoff - Centennial Street Apartments\6 Project CAD Files\2800 01 ZLD

SITE LOCATION MAP

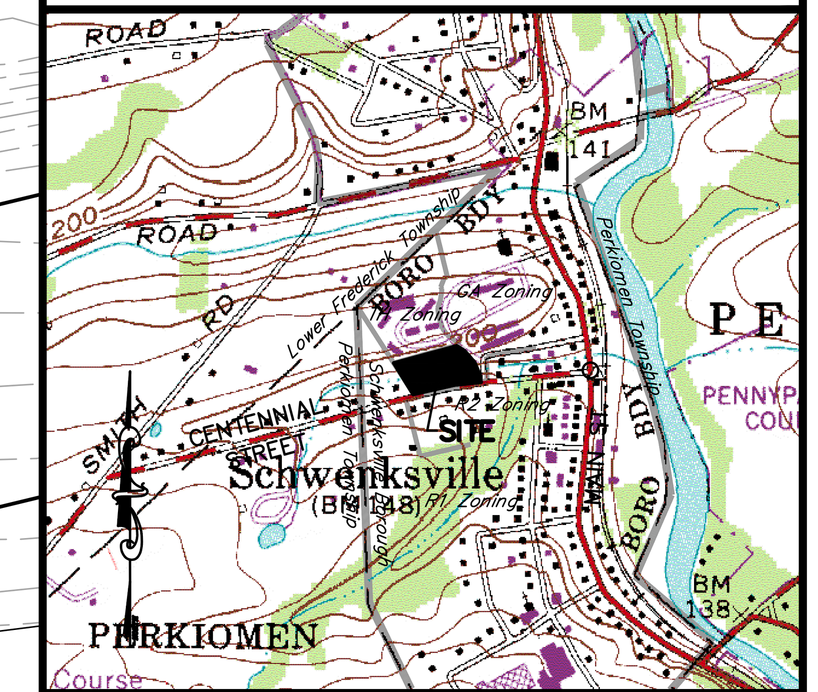

U.S.G.S. PERKIOMENVILLE QUADRANGLE 7.5' SERIES
SCALE: 1"=1000'

GENERAL NOTES

1. BOUNDARY LINE INFORMATION BASED ON A LAND DEVELOPMENT PLAN BY STOUT, TACCONELLI & ASSOCIATES, INC. DATED JUNE 2, 1997 AND LAST REVISED NOVEMBER 5, 2001.
2. TOPOGRAPHIC AND ELEVATION INFORMATION BASED ON THE ABOVE REFERENCED STOUT, TACCONELLI & ASSOCIATES, INC. PLAN.
3. NO PART OF THE SUBJECT TRACT IS LOCATED WITHIN A 100-YEAR FLOOD PLAIN BASED ON THE FLOOD INSURANCE RATE MAP (PANEL NO. 42091C0114 G, MAP EFFECTIVE MARCH 2, 2016) PUBLISHED BY THE FEDERAL EMERGENCY MANAGEMENT AGENCY.
4. WATERS OF THE COMMONWEALTH (NOT INCLUDING WETLANDS) SHOWN HEREON WERE DELINEATED BY DEL-VAL SOIL AND ENVIRONMENTAL CONSULTANTS, INC. AUGUST 19, 2014.
5. WRITTEN PERMISSION HAS BEEN OBTAINED FROM THE OWNER OF BLOCK 03A / UNIT 45 (HIGH POINTE HOMEOWNERS ASSOCIATION) AND PROVIDED TO SCHWENKSVILLE BOROUGH FOR THE REMOVAL AND RESTORATION OF THE EXISTING FOUNDATION AND RETAINING WALLS CROSSING THE COMMON PROPERTY LINE.

SOILS DATA

SOILS DATA WAS OBTAINED FROM A SOIL SURVEY OF MONTGOMERY COUNTY, PENNSYLVANIA, BY THE NATURAL RESOURCES CONSERVATION SERVICE, THROUGH THE WEB SOIL SURVEY DATABASE.

PkD PENN–KLINESVILLE CHANNERY SILT LOAMS, 15 TO 25 PERCENT SLOPES, WELL DRAINED, MODERATELY RAPID PERMEABILITY, RAPID RUNOFF CHARACTERISTICS, LOW AVAILABLE WATER CAPACITY, SEVERE EROSION HAZARD.
RESTRICTIONS – POORLY SUITED–SLOPE AND DEPTH TO BEDROCK.

ReB READINGTON SILT LOAM, 3 TO 8 PERCENT SLOPES
RESTRICTIONS – FROST ACTION, DEPTH TO SATURATED ZONE, CUTBANKS CAVE DEPTH TO HARD BEDROCK.

TAX PARCEL INFORMATION

PARCEL NO.:	20-00-00057-10-3
BLOCK/UNIT:	003A / 046
DEED:	5957-2872
PARCEL LOCATION:	CENTENNIAL STREET / FOREST LANE
ZONING DISTRICT:	GA GARDEN APARTMENTS
OWNER OF RECORD:	HOFF PROPERTIES, LLC P.O. BOX 637 SOUDERTON, PA 18964
GROSS TRACT AREA (TO TITLE LINE):	2.6763 ACRES

UNDERGROUND UTILITY NOTE

PENNSYLVANIA ONE CALL SYSTEM, INC. 1-800-242-1776 STOP-CALL BEFORE YOU DIG!

LOCATIONS OF EXISTING UTILITIES SHOWN HEREON ARE BASED ON INFORMATION RECEIVED FROM FACILITY OWNERS FOLLOWING A CALL TO PA ONE CALL SYSTEM, INC. COMPLETENESS OR ACCURACY OF TYPE, SIZE, DEPTH, OR HORIZONTAL LOCATION OF UTILITIES CANNOT BE GUARANTEED. CONTRACTORS MUST VERIFY THE LOCATION AND DEPTH OF UNDERGROUND UTILITIES BEFORE THE START OF WORK BY NOTIFYING FACILITY OWNERS, THROUGH THE PA ONE CALL SYSTEM (1–800–242–1776 OR 811), NOT LESS THAN 3 BUSINESS DAYS NOR MORE THAN 10 BUSINESS DAYS IN ADVANCE OF BEGINNING EXCAVATION OR DEMOLITION WORK PER THE REQUIREMENTS OF PA ACTS 287 AND 121, AS AMENDED.

DESIGN SERIAL NO.: 20131061391 (04–16–2013)

30 0 15 30 60 90
DRAWING SCALE: 1"=30'

THIS DRAWING IS NOT TO BE USED FOR CONSTRUCTION UNLESS STAMPED: "ISSUED FOR CONSTRUCTION"

No.	REVISION	DATE
11	REVISED PER BOROUGH EMAIL COMMENTS (10/09/18)	OCTOBER 24, 2018
10	REVISED PER BOROUGH EMAIL COMMENTS (07/06/18) & 07/09/18)	AUGUST 16, 2018
9	REVISED PER BOROUGH LTR. (12/20/17), SEWER AUTH. LTR. (01/31/18)	JUNE 5, 2018
8	REVISED PER MCCD TECHNICAL REVIEW (03/12/18)	MAY 4, 2018
7	REVISED PER MCCD ADMINISTRATIVE INCOMPLETENESS REVIEW (01/09/18)	JANUARY 16, 2018
	(SEE COVER SHEET FOR COMPLETE LIST OF PLAN REVISION)	
	PLAN ORIGINATION DATE	JUNE 24, 2016

EXISTING FEATURES PLAN

AS PART OF

CENTENNIAL APARTMENTS

PREPARED FOR

HOFF PROPERTIES, LLC

SITE SITUATE IN

SCHWENKSVILLE BOROUGH, MONTGOMERY COUNTY, PA

Richard C. Mast Associates, P.C.
Consulting Engineers and Surveyors
www.rcmaonline.com
The Village at Lederach
658 Harleysville Pike, Suite 150
Harleysville, PA 19438
(215) 513-2100

DRAFTED BY	PROJ. MNGR.	PROJECT NO.	DRAWING NO.
R.A.F.	D.B.C.	2800	2 OF 22

LEGEND

- TRACT BOUNDARY
- ADJOINING PROPERTY LINE
- FLOOD PLAIN
- RIGHT–OF–WAY
- CURBING
- EDGE OF ROAD
- DRIVEWAYS
- CENTERLINE
- EASEMENT
- FENCE
- ZONING LINE
- CONTOUR — 262
- INDEX CONTOUR — 260
- SOILS LINE
- WATER LINE / LATERAL
- GAS LINE
- ELECTRIC LINE
- SANITARY LATERAL
- SANITARY SEWER LINE
- STORM SEWER LINE
- TREE LINE
- CONCRETE MONUMENT/IRON PIN
- TRAFFIC SIGN/STREET SIGN
- LIGHT POST/UTILITY POLE
- SEWER VENT (S.V.) OR CLEAN OUT (C.O.)
- SANITARY MANHOLE
- STORM SEWER HEADWALL
- STORM SEWER MANHOLE
- STORM SEWER INLET
- FIRE HYDRANT
- WATER VALVE
- GAS VALVE
- DECIDUOUS TREES
- EVERGREEN TREES
- SOILS TYPE LABEL — ReB2
- STEEP SLOPES 20% TO 30%
- STEEP SLOPES 30% AND GREATER
- LIMIT OF MAN–MADE STEEP SLOPES (AREA EXCLUDED FROM ZO. 176.95.2 STEEP SLOPES CALCULATIONS)

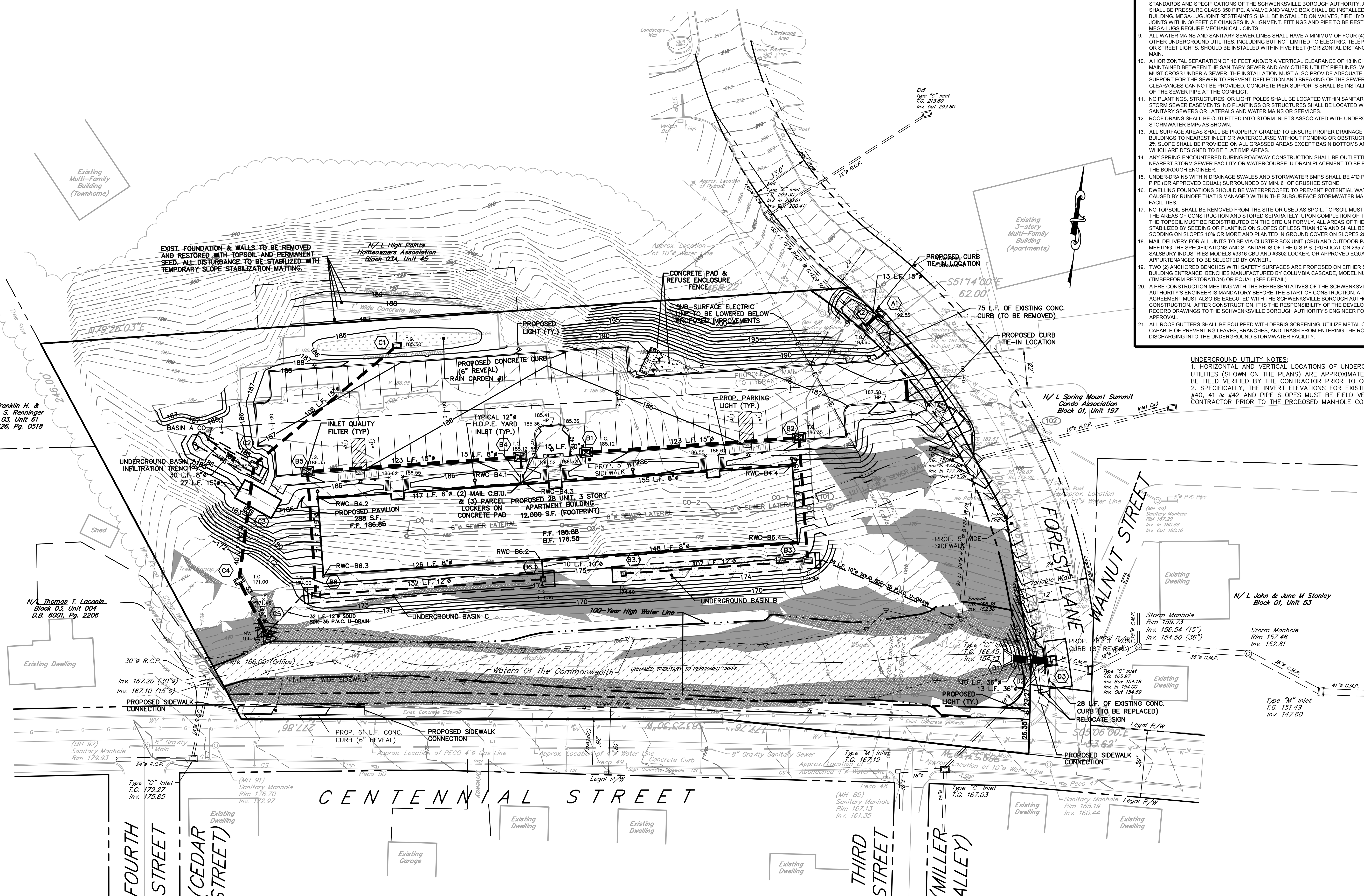

CONSTRUCTION NOTES

1. ALL UTILITIES SHALL BE PROVIDED BY UNDERGROUND SERVICE.
2. ALL STORM STRUCTURES SHALL CONFORM TO PENN.D.O.T. FORM 408/LATEST EDITION. ALL CURB INLETS SHALL BE PENN. D.O.T. 4' TYPE "C" INLETS WITH BICYCLE SAFE STRUCTURAL STEEL GRATES. ROADWAY INLETS PROPOSED ALONG MOUNTABLE CURB SHALL BE TYPE "M" INLETS AND INSTALLED ADJACENT TO THE THE CURB FACE. ALL LAWN AREA/ROADSIDE SWALE AREA INLETS SHALL BE PENN. D.O.T. 4' TYPE "M". TYPE "M" INLETS WITHIN ROADWAYS SHALL HAVE BICYCLE SAFE STRUCTURAL STEEL GRATES.
3. ALL STORM SEWER PIPING SHALL BE REINFORCED CONCRETE PIPE AND SHALL CONFORM TO PENN. D.O.T. FORM 408/LATEST EDITION, SECTION 601.
4. THE TOP OF GRATE ELEVATION FOR ALL TYPE "C" STORM SEWER INLETS IS FOR THE CENTER OF THE INLET AT THE FACE OF CURB. THE CONTRACTOR IS RESPONSIBLE FOR PROJECTING THE ROADWAY GRADE ALONG THE LENGTH OF THE INLET. THE TOP OF GRATE ELEVATION FOR ALL TYPE "M" STORM SEWER INLETS IS FOR THE CENTER/MIDDLE OF THE INLET.
5. ALL CONSTRUCTION SHALL CONFORM TO SCHWENKSVILLE BOROUGH, THE SCHWENKSVILLE BOROUGH AUTHORITY, AND/OR PECO ENERGY SPECIFICATIONS AND STANDARDS, WHICHEVER IS GREATER. INTERPRETATION SHALL REST WITH THE BOROUGH ENGINEER, OR HIS REPRESENTATIVE IN THE FIELD.
6. ALL SANITARY SEWER MATERIALS AND CONSTRUCTION SHALL BE IN CONFORMANCE WITH THE STANDARDS AND SPECIFICATIONS OF THE SCHWENKSVILLE BOROUGH AUTHORITY. GRAVITY SANITARY SEWER SERVICE WILL BE PROVIDED TO THE BASEMENT ELEVATION OF THE BUILDING. ALL SANITARY SEWER MAINS SHALL BE 8 INCH (DIA.) SDR 26 PVC PIPE, OR EPOXY LINED DUCTILE IRON PIPE FOR MAINS INSTALLED AT A DEPTH OF GREATER THAN FIFTEEN FEET. ALL LATERALS SHALL BE 6 INCH (DIA.) SDR 26 PVC PIPE OR EPOXY LINED DUCTILE IRON PIPE AS SHOWN ON THE PLANS. SANITARY SEWER LATERALS SHALL BE LAID ON A SLOPE OF NOT LESS THAN 1%.
7. THE PROPOSED SANITARY SEWER MAIN CONNECTION TO THE EXISTING SYSTEM SHALL BE VIA INSTALLATION OF A STANDARD MANHOLE. EXISTING MAIN SHALL BE CONNECTED TO THE NEW MANHOLE WITH SDR 26 PVC STUBS AND SOLID SLEEVE TYPE REPAIR COUPLINGS.
8. ALL WATER FACILITIES MATERIALS AND CONSTRUCTION SHALL BE IN CONFORMANCE WITH THE STANDARDS AND SPECIFICATIONS OF THE SCHWENKSVILLE BOROUGH AUTHORITY. ALL WATER MAINS SHALL BE PRESSURE CLASS 350 PIPE. A VALVE AND VALVE BOX SHALL BE INSTALLED OUTSIDE OF THE BUILDING. MEGA-LUG JOINT RESTRAINTS SHALL BE INSTALLED ON VALVES, FIRE HYDRANTS, BENDS, AND JOINTS WITHIN 30 FEET OF CHANGES IN ALIGNMENT. FITTINGS AND PIPE TO BE RESTRAINED WITH MEGA-LUGS REQUIRE MECHANICAL JOINTS.
9. ALL WATER MAINS AND SANITARY SEWER LINES SHALL HAVE A MINIMUM OF FOUR (4) FEET OF COVER. NO OTHER UNDERGROUND UTILITIES, INCLUDING BUT NOT LIMITED TO ELECTRIC, TELEPHONE, CABLE, GAS OR STREET LIGHTS, SHOULD BE INSTALLED WITHIN FIVE FEET (HORIZONTAL DISTANCE) OF THE WATER MAIN.
10. A HORIZONTAL SEPARATION OF 10 FEET AND/OR A VERTICAL CLEARANCE OF 18 INCHES SHALL BE MAINTAINED BETWEEN THE SANITARY SEWER AND ANY OTHER UTILITY PIPELINES. WHERE PIPELINES MUST CROSS UNDER A SEWER, THE INSTALLATION MUST ALSO PROVIDE ADEQUATE STRUCTURAL SUPPORT FOR THE SEWER TO PREVENT DEFLECTION AND BREAKING OF THE SEWER. WHERE PROPER CLEARANCES CAN NOT BE PROVIDED, CONCRETE PIER SUPPORTS SHALL BE INSTALLED ON EITHER SIDE OF THE SEWER PIPE AT THE CONFLICT.
11. NO PLANTINGS, STRUCTURES, OR LIGHT POLES SHALL BE LOCATED WITHIN SANITARY SEWER, WATER, OR STORM SEWER EASEMENTS. NO PLANTINGS OR STRUCTURES SHALL BE LOCATED WITHIN 10 FEET OF THE SANITARY SEWERS OR LATERALS AND WATER MAINS OR SERVICES.
12. ROOF DRAINS SHALL BE OUTLETTED INTO STORM INLETS ASSOCIATED WITH UNDERGROUND STORMWATER BMPs AS SHOWN.
13. ALL SURFACE AREAS SHALL BE PROPERLY GRADED TO ENSURE PROPER DRAINAGE FLOW, AWAY FROM BUILDINGS TO NEAREST INLET OR WATERCOURSE WITHOUT PONDING OR OBSTRUCTION. A MINIMUM OF 2% SLOPE SHALL BE PROVIDED ON ALL GRASSED AREAS EXCEPT BASIN BOTTOMS AND OTHER BMPS, WHICH ARE DESIGNED TO BE FLAT BMP AREAS.
14. ANY SPRING ENCOUNTERED DURING ROADWAY CONSTRUCTION SHALL BE OUTLETTED BY U-DRAIN TO NEAREST STORM SEWER FACILITY OR WATERCOURSE. U-DRAIN PLACEMENT TO BE BY THE DIRECTION OF THE BOROUGH ENGINEER.
15. UNDER-DRAINS WITHIN DRAINAGE SWALES AND STORMWATER BMPS SHALL BE 4"Ø PERFORATED H.D.P.E. PIPE (OR APPROVED EQUAL) SURROUNDED BY MIN. 6" OF CRUSHED STONE.
16. DWELLING FOUNDATIONS SHOULD BE WATERPROOFED TO PREVENT POTENTIAL WATER PROBLEMS CAUSED BY RUNOFF THAT IS MANAGED WITHIN THE SUBSURFACE STORMWATER MANAGEMENT FACILITIES.
17. NO TOPSOIL SHALL BE REMOVED FROM THE SITE OR USED AS SPOIL. TOPSOIL MUST BE REMOVED FROM THE AREAS OF CONSTRUCTION AND STORED SEPARATELY. UPON COMPLETION OF THE CONSTRUCTION, THE TOPSOIL MUST BE REDISTRIBUTED ON THE SITE UNIFORMLY. ALL AREAS OF THE SITE SHALL BE STABILIZED BY SEEDING OR PLANTING ON SLOPES OF LESS THAN 10% AND SHALL BE STABILIZED BY SODDING ON SLOPES 10% OR MORE AND PLANTED IN GROUND COVER ON SLOPES 20% OR MORE.
18. MAIL DELIVERY FOR ALL UNITS TO BE VIA CLUSTER BOX UNIT (CBU) AND OUTDOOR PARCEL LOCKER MEETING THE SPECIFICATIONS AND STANDARDS OF THE U.S.P.S. (PUBLICATION 265-A, OCT. 2013). SALSBURY INDUSTRIES MODELS #3316 CBU AND #3302 LOCKER, OR APPROVED EQUALS. COLOR AND APPURTENANCES TO BE SELECTED BY OWNER..
19. TWO (2) ANCHORED BENCHES WITH SAFETY SURFACES ARE PROPOSED ON EITHER SIDE OF EACH BUILDING ENTRANCE. BENCHES MANUFACTURED BY COLUMBIA CASCADE, MODEL NUMBER 2118-6 (TIMBERFORM RESTORATION) OR EQUAL (SEE DETAIL).
20. A PRE-CONSTRUCTION MEETING WITH THE REPRESENTATIVES OF THE SCHWENKSVILLE BOROUGH AUTHORITY'S ENGINEER IS MANDATORY BEFORE THE START OF CONSTRUCTION. A TAPPING FEE AGREEMENT MUST ALSO BE EXECUTED WITH THE SCHWENKSVILLE BOROUGH AUTHORITY BEFORE CONSTRUCTION. AFTER CONSTRUCTION, IT IS THE RESPONSIBILITY OF THE DEVELOPER TO SUPPLY RECORD DRAWINGS TO THE SCHWENKSVILLE BOROUGH AUTHORITY'S ENGINEER FOR REVIEW AND APPROVAL.
21. ALL ROOF GUTTERS SHALL BE EQUIPPED WITH DEBRIS SCREENING. UTILIZE METAL OR PLASTIC MESH CAPABLE OF PREVENTING LEAVES, BRANCHES, AND TRASH FROM ENTERING THE ROOF DRAIN SYSTEM DISCHARGING INTO THE UNDERGROUND STORMWATER FACILITY.

LEGEND

PARCEL / LOT LINES	
CURBING	
EDGE OF ROAD	
DRIVEWAYS	
CENTERLINE	
EASEMENT	
BUILDING SETBACK LINE	
FENCE	X X
BUFFER LINE	
CONTOUR	262
INDEX CONTOUR	260
WATER LINE	W W W W
WATER SERVICE	W W W W
ELECTRIC LINE	E E E E
SANITARY LATERAL	L L L L
SANITARY SEWER LINE	
STORM SEWER LINE	
WOOD LINE	
TRAFFIC SIGN	
STREET SIGN	
LIGHT POST	
UTILITY POLE	
HANDICAP SYMBOL	
SEWER VENT (S.V.) OR CLEAN OUT (C.O.)	
SANITARY MANHOLE	
SANITARY M.H. LABEL	100
STORM SEWER LABEL	A1
STORM SEWER HEADWALL	
STORM SEWER MANHOLE	
STORM SEWER INLET	
FIRE HYDRANT	
WATER VALVE	

UNDERGROUND UTILITY NOTES:
1. HORIZONTAL AND VERTICAL LOCATIONS OF UNDERGROUND UTILITIES (SHOWN ON THE PLANS) ARE APPROXIMATE AND MUST BE FIELD VERIFIED BY THE CONTRACTOR PRIOR TO CONSTRUCTION.
2. SPECIFICALLY, THE INVERT ELEVATIONS FOR EXISTING MANHOLES #40, 41 & #42 AND PIPE SLOPES MUST BE FIELD VERIFIED BY THE CONTRACTOR PRIOR TO THE PROPOSED MANHOLE CONNECTION.

UNDERGROUND UTILITY NOTE

PENNSYLVANIA ONE CALL SYSTEM, INC. 1-800-242-1776 STOP-CALL BEFORE YOU DIG!

LOCATIONS OF EXISTING UTILITIES SHOWN HEREON ARE BASED ON INFORMATION RECEIVED FROM FACILITY OWNERS FOLLOWING A CALL TO PA ONE CALL SYSTEM, INC. COMPLETENESS OR ACCURACY OF TYPE, SIZE, DEPTH, OR HORIZONTAL LOCATION OF UTILITIES CANNOT BE GUARANTEED. CONTRACTORS MUST VERIFY THE LOCATION AND DEPTH OF UNDERGROUND UTILITIES BEFORE THE START OF WORK BY NOTIFYING FACILITY OWNERS, THROUGH THE PA ONE CALL SYSTEM (1-800-242-1776 OR 811), NOT LESS THAN 3 BUSINESS DAYS NOR MORE THAN 10 BUSINESS DAYS IN ADVANCE OF BEGINNING EXCAVATION OR DEMOLITION WORK PER THE REQUIREMENTS OF PA ACTS 287 AND 121, AS AMENDED.

DESIGN SERIAL NO.: 20131061391 (04-16-2013)

30 0 15 30 60 90
DRAWING SCALE: 1"=30'

THIS DRAWING IS NOT TO BE USED FOR CONSTRUCTION UNLESS STAMPED: "ISSUED FOR CONSTRUCTION"

No.	REVISION	DATE
11	REVISED PER BOROUGH EMAIL COMMENTS (10/09/18)	OCTOBER 24, 2018
10	REVISED PER BOROUGH EMAIL COMMENTS (07/06/18) & 07/09/18)	AUGUST 16, 2018
9	REVISED PER BOROUGH LTR. (12/20/17), SEWER AUTH. LTR. (01/31/18)	JUNE 5, 2018
8	REVISED PER MCCD TECHNICAL REVIEW (03/12/18)	MAY 4, 2018
7	REVISED PER MCCD ADMINISTRATIVE INCOMPLETENESS REVIEW (01/09/18)	JANUARY 16, 2018
	(SEE COVER SHEET FOR COMPLETE LIST OF PLAN REVISION)	
	PLAN ORIGINATION DATE	JUNE 24, 2016

STORM SEWER AND GRADING PLAN

AS PART OF

CENTENNIAL APARTMENTS

PREPARED FOR

HOFF PROPERTIES, LLC

SITE SITUATE IN

SCHWENKSVILLE BOROUGH, MONTGOMERY COUNTY, PA

RICHARD C. MAST ASSOCIATES, P.C. RCMA

Richard C. Mast Associates, P.C.
Consulting Engineers and Surveyors
www.rcmaonline.com

The Village at Lederach
658 Harleysville Pike, Suite 150
Harleysville, PA 19438
(215) 513-2100

DRAFTED BY	PROJ. MNGR.	PROJECT NO.	DRAWING NO.
R.A.F.	D.B.C.	2800	3 OF 22

Q:\ProjectAdmin\2800 Series\2800 Hoff – Centennial Street Apartments\6 Project CAD Files\2800 03 ZCI

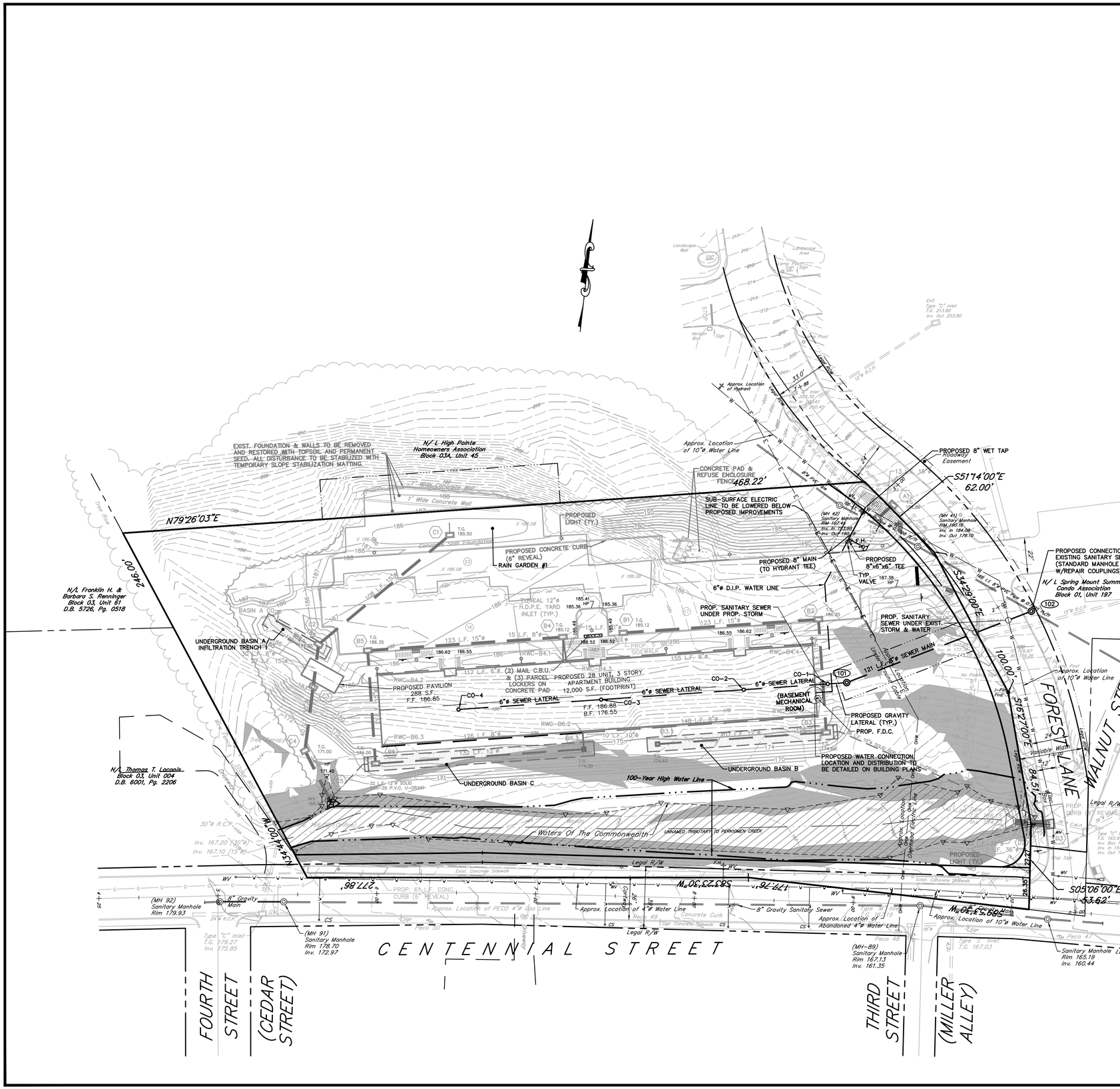

CONSTRUCTION NOTES

1. ALL UTILITIES SHALL BE PROVIDED BY UNDERGROUND SERVICE.
2. ALL STORM STRUCTURES SHALL CONFORM TO PENN.D.O.T. FORM 408/LATEST EDITION. ALL CURB INLETS SHALL BE PENN. D.O.T. 4' TYPE "C" INLETS WITH BICYCLE SAFE STRUCTURAL STEEL GRATES. ROADWAY INLETS PROPOSED ALONG MOUNTABLE CURB SHALL BE TYPE "M" INLETS AND INSTALLED ADJACENT TO THE THE CURB FACE. ALL LAWN AREA/ROADSIDE SWALE AREA INLETS SHALL BE PENN. D.O.T. 4' TYPE "M". TYPE "M" INLETS WITHIN ROADWAYS SHALL HAVE BICYCLE SAFE STRUCTURAL STEEL GRATES.
3. ALL STORM SEWER PIPING SHALL BE REIN/FORCED CONCRETE PIPE AND SHALL CONFORM TO PENN. D.O.T FORM 408/LATEST EDITION, SECTION 601.
4. THE TOP OF GRATE ELEVATION FOR ALL TYPE "C" STORM SEWER INLETS IS FOR THE CENTER OF THE INLET AT THE FACE OF CURB. THE CONTRACTOR IS RESPONSIBLE FOR PROJECTING THE ROADWAY GRADE ALONG THE LENGTH OF THE INLET. THE TOP OF GRATE ELEVATION FOR ALL TYPE "M" STORM SEWER INLETS IS FOR THE CENTER/MIDDLE OF THE INLET.
5. ALL CONSTRUCTION SHALL CONFORM TO SCHWENKSVILLE BOROUGH, THE SCHWENKSVILLE BOROUGH AUTHORITY, AND/OR PECO ENERGY SPECIFICATIONS AND STANDARDS, WHICHEVER IS GREATER. INTERPRETATION SHALL REST WITH THE BOROUGH ENGINEER, OR HIS REPRESENTATIVE IN THE FIELD.
6. ALL SANITARY SEWER MATERIALS AND CONSTRUCTION SHALL BE IN CONFORMANCE WITH THE STANDARDS AND SPECIFICATIONS OF THE SCHWENKSVILLE BOROUGH AUTHORITY. GRAVITY SANITARY SEWER SERVICE WILL BE PROVIDED TO THE BASEMENT ELEVATION OF THE BUILDING. ALL SANITARY SEWER MAINS SHALL BE 8 INCH (DIA.) SDR 26 PVC PIPE, OR EPOXY LINED DUCTILE IRON PIPE FOR MAINS INSTALLED AT A DEPTH OF GREATER THAN FIFTEEN FEET. ALL LATERALS SHALL BE 6 INCH (DIA.) SDR 26 PVC PIPE OR EPOXY LINED DUCTILE IRON PIPE AS SHOWN ON THE PLANS. SANITARY SEWER LATERALS SHALL BE LAID ON A SLOPE OF NOT LESS THAN 1%.
7. THE PROPOSED SANITARY SEWER MAIN CONNECTION TO THE EXISTING SYSTEM SHALL BE VIA INSTALLATION OF A STANDARD MANHOLE. EXISTING MAIN SHALL BE CONNECTED TO THE NEW MANHOLE WITH SDR 26 PVC STUBS AND SOLID SLEEVE TYPE REPAIR COUPLINGS.
8. ALL WATER FACILITIES MATERIALS AND CONSTRUCTION SHALL BE IN CONFORMANCE WITH THE STANDARDS AND SPECIFICATIONS OF THE SCHWENKSVILLE BOROUGH AUTHORITY. ALL WATER MAINS SHALL BE PRESSURE CLASS 350 PIPE. A VALVE AND VALVE BOX SHALL BE INSTALLED OUTSIDE OF THE BUILDING. MEGA-LUG JOINT RESTRAINTS SHALL BE INSTALLED ON VALVES, FIRE HYDRANTS, BENDS, AND JOINTS WITHIN 30 FEET OF CHANGES IN ALIGNMENT. FITTINGS AND PIPE TO BE RESTRAINED WITH MEGA-LUGS REQUIRE MECHANICAL JOINTS.
9. ALL WATER MAINS AND SANITARY SEWER LINES SHALL HAVE A MINIMUM OF FOUR (4) FEET OF COVER. NO OTHER UNDERGROUND UTILITIES, INCLUDING BUT NOT LIMITED TO ELECTRIC, TELEPHONE, CABLE, GAS OR STREET LIGHTS, SHOULD BE INSTALLED WITHIN FIVE FEET (HORIZONTAL DISTANCE) OF THE WATER MAIN.
10. A HORIZONTAL SEPARATION OF 10 FEET AND/OR A VERTICAL CLEARANCE OF 18 INCHES SHALL BE MAINTAINED BETWEEN THE SANITARY SEWER AND ANY OTHER UTILITY PIPELINES. WHERE PIPELINES MUST CROSS UNDER A SEWER, THE INSTALLATION MUST ALSO PROVIDE ADEQUATE STRUCTURAL SUPPORT FOR THE SEWER TO PREVENT DEFLECTION AND BREAKING OF THE SEWER. WHERE PROPER CLEARANCES CAN NOT BE PROVIDED, CONCRETE PIER SUPPORTS SHALL BE INSTALLED ON EITHER SIDE OF THE SEWER PIPE AT THE CONFLICT.
11. NO PLANTINGS, STRUCTURES, OR LIGHT POLES SHALL BE LOCATED WITHIN SANITARY SEWER, WATER, OR STORM SEWER EASEMENTS. NO PLANTINGS OR STRUCTURES SHALL BE LOCATED WITHIN 10 FEET OF THE SANITARY SEWERS OR LATERALS AND WATER MAINS OR SERVICES.
12. ROOF DRAINS SHALL BE OUTLETTED INTO STORM INLETS ASSOCIATED WITH UNDERGROUND STORMWATER BMPs AS SHOWN.
13. ALL SURFACE AREAS SHALL BE PROPERLY GRADED TO ENSURE PROPER DRAINAGE FLOW, AWAY FROM BUILDINGS TO NEAREST INLET OR WATERCOURSE WITHOUT PONDING OR OBSTRUCTION. A MINIMUM OF 2% SLOPE SHALL BE PROVIDED ON ALL GRASSED AREAS EXCEPT BASIN BOTTOMS AND OTHER BMPS, WHICH ARE DESIGNED TO BE FLAT BMP AREAS.
14. ANY SPRING ENCOUNTERED DURING ROADWAY CONSTRUCTION SHALL BE OUTLETTED BY U-DRAIN TO NEAREST STORM SEWER FACILITY OR WATERCOURSE. U-DRAIN PLACEMENT TO BE BY THE DIRECTION OF THE BOROUGH ENGINEER.
15. UNDER-DRAINS WITHIN DRAINAGE SWALES AND STORMWATER BMPS SHALL BE 4"Ø PERFORATED H.D.P.E. PIPE (OR APPROVED EQUAL) SURROUNDED BY MIN. 6" OF CRUSHED STONE.
16. DWELLING FOUNDATIONS SHOULD BE WATERPROOFED TO PREVENT POTENTIAL WATER PROBLEMS CAUSED BY RUNOFF THAT IS MANAGED WITHIN THE SUBSURFACE STORMWATER MANAGEMENT FACILITIES.
17. NO TOPSOIL SHALL BE REMOVED FROM THE SITE OR USED AS SPOIL. TOPSOIL MUST BE REMOVED FROM THE AREAS OF CONSTRUCTION AND STORED SEPARATELY. UPON COMPLETION OF THE CONSTRUCTION, THE TOPSOIL MUST BE REDISTRIBUTED ON THE SITE UNIFORMLY. ALL AREAS OF THE SITE SHALL BE STABILIZED BY SEEDING OR PLANTING ON SLOPES OF LESS THAN 10% AND SHALL BE STABILIZED BY SODDING ON SLOPES 10% OR MORE AND PLANTED IN GROUND COVER ON SLOPES 20% OR MORE.
18. MAIL DELIVERY FOR ALL UNITS TO BE VIA CLUSTER BOX UNIT (CBU) AND OUTDOOR PARCEL LOCKER MEETING THE SPECIFICATIONS AND STANDARDS OF THE U.S.P.S. (PUBLICATION 265-A, OCT. 2013). SALSBURY INDUSTRIES MODELS #3316 CBU AND #3302 LOCKER, OR APPROVED EQUALS. COLOR AND APPURTENANCES TO BE SELECTED BY OWNER.
19. TWO (2) ANCHORED BENCHES WITH SAFETY SURFACES ARE PROPOSED ON EITHER SIDE OF EACH BUILDING ENTRANCE. BENCHES MANUFACTURED BY COLUMBIA CASCADE, MODEL NUMBER 2118-6 (TIMBERFORM RESTORATION) OR EQUAL (SEE DETAIL).
20. A PRE-CONSTRUCTION MEETING WITH THE REPRESENTATIVES OF THE SCHWENKSVILLE BOROUGH AUTHORITY'S ENGINEER IS MANDATORY BEFORE THE START OF CONSTRUCTION. a TAPPING FEE AGREEMENT MUST ALSO BE EXECUTED WITH THE SCHWENKSVILLE BOROUGH AUTHORITY BEFORE CONSTRUCTION. AFTER CONSTRUCTION, IT IS THE RESPONSIBILITY OF THE DEVELOPER TO SUPPLY RECORD DRAWINGS TO THE SCHWENKSVILLE BOROUGH AUTHORITY'S ENGINEER FOR REVIEW AND APPROVAL.
21. ALL ROOF GUTTERS SHALL BE EQUIPPED WITH DEBRIS SCREENING. UTILIZE METAL OR PLASTIC MESH CAPABLE OF PREVENTING LEAVES, BRANCHES, AND TRASH FROM ENTERING THE ROOF DRAIN SYSTEM DISCHARGING INTO THE UNDERGROUND STORMWATER FACILITY.

UNDERGROUND UTILITY NOTES:
1. HORIZONTAL AND VERTICAL LOCATIONS OF UNDERGROUND UTILITIES (SHOWN ON THE PLANS) ARE APPROXIMATE AND MUST BE FIELD VERIFIED BY THE CONTRACTOR PRIOR TO CONSTRUCTION.
2. SPECIFICALLY, THE INVERT ELEVATIONS FOR EXISTING MANHOLES #40, 41 & #42 AND PIPE SLOPES MUST BE FIELD VERIFIED BY THE CONTRACTOR PRIOR TO THE PROPOSED MANHOLE CONNECTION.

LEGEND

RIGHT-OF-WAY
PARCEL / LOT LINES
CURBING
EDGE OF ROAD
DRIVEWAYS
CENTERLINE
EASEMENT
BUILDING SETBACK LINE
FENCE
BUFFER LINE
CONTOUR — 262
INDEX CONTOUR — 260
WATER LINE
WATER SERVICE
ELECTRIC LINE
SANITARY LATERAL
SANITARY SEWER LINE
STORM SEWER LINE
WOOD LINE
TRAFFIC SIGN
STREET SIGN
LIGHT POST
UTILITY POLE
HANDICAP SYMBOL
SEWER VENT (S.V.) OR CLEAN OUT (C.O.)
SANITARY MANHOLE
SANITARY M.H. LABEL — 100
STORM SEWER LABEL — A1
STORM SEWER HEADWALL
STORM SEWER MANHOLE
STORM SEWER INLET
FIRE HYDRANT
WATER VALVE

UNDERGROUND UTILITY NOTE

PENNSYLVANIA ONE CALL SYSTEM, INC. 1-800-242-1776 STOP-CALL BEFORE YOU DIG!

LOCATIONS OF EXISTING UTILITIES SHOWN HEREON ARE BASED ON INFORMATION RECEIVED FROM FACILITY OWNERS FOLLOWING A CALL TO PA ONE CALL SYSTEM, INC. COMPLETENESS OR ACCURACY OF TYPE, SIZE, DEPTH, OR HORIZONTAL LOCATION OF UTILITIES CANNOT BE GUARANTEED. CONTRACTORS MUST VERIFY THE LOCATION AND DEPTH OF UNDERGROUND UTILITIES BEFORE THE START OF WORK BY NOTIFYING FACILITY OWNERS, THROUGH THE PA ONE CALL SYSTEM (1-800-242-1776 OR 811), NOT LESS THAN 3 BUSINESS DAYS NOR MORE THAN 10 BUSINESS DAYS IN ADVANCE OF BEGINNING EXCAVATION OR DEMOLITION WORK PER THE REQUIREMENTS OF PA ACTS 287 AND 121, AS AMENDED.

DESIGN SERIAL NO.: 20131061391 (04-16-2013)

30 0 15 30 60 90
DRAWING SCALE: 1"= 30 '

THIS DRAWING IS NOT TO BE USED FOR CONSTRUCTION UNLESS STAMPED: "ISSUED FOR CONSTRUCTION"

No.	REVISION	DATE
11	REVISED PER BOROUGH EMAIL COMMENTS (10/09/18)	OCTOBER 24, 2018
10	REVISED PER BOROUGH EMAIL COMMENTS (07/06/18) & 07/09/18)	AUGUST 16, 2018
9	REVISED PER BOROUGH LTR. (12/20/17), SEWER AUTH. LTR. (01/31/18)	JUNE 5, 2018
8	REVISED PER MCCD TECHNICAL REVIEW (03/12/18)	MAY 4, 2018
7	REVISED PER MCCD ADMINISTRATIVE INCOMPLETENESS REVIEW (01/09/18)	JANUARY 16, 2018
	(SEE COVER SHEET FOR COMPLETE LIST OF PLAN REVISION)	
	PLAN ORIGINATION DATE	JUNE 24, 2016

SANITARY SEWER AND WATER FACILITIES PLAN

AS PART OF

CENTENNIAL APARTMENTS

PREPARED FOR

HOFF PROPERTIES, LLC

SITE SITUATE IN

SCHWENKSVILLE BOROUGH, MONTGOMERY COUNTY, PA

RICHARD C. MAST ASSOCIATES, P.C. RCMA

Richard C. Mast Associates, P.C.
Consulting Engineers and Surveyors
www.rcmaonline.com

The Village at Lederach
658 Harleysville Pike, Suite 150
Harleysville, PA 19438
(215) 513-2100

DRAFTED BY	PROJ. MNGR.	PROJECT NO.	DRAWING NO.
R.A.F.	D.B.C.	2800	4 OF 22

Q:\ProjectAdmin\2800 Series\2800 Hoff - Centennial Street Apartments\6 Project CAD Files\2800 04 ZO1

PLANTING SCHEDULE

SYM.	QTY.	BOTANICAL NAME	COMMON NAME	MINIMUM SIZE	SPACING	CONDITION	PA BMP	ORDINANCE REQUIREMENT REFERENCE
SHADE / CANOPY TREES								
ARA	14	ACER X FREEMANII 'ARMSTRONG II'	ARMSTRONG II RED MAPLE	2" TO 2 1/2" CALIPER	VARIES	B&B	---	§147-39.C(1)(e) STREET TREES THROUGH PARKING LOTS; §147-39.E(2)(e) PARKING LOT LANDSCAPING
NS	1	NYSSA SYLVATICA	BLACK GUM	2" TO 2 1/2" CALIPER	VARIES	B&B	YES	§147-39.E(2)(e) PARKING LOT LANDSCAPING; §147-39.F(2) TRACT AREA REQUIREMENT FOR CANOPY TREES
QB	6	QUERCUS BICOLOR	SWAMP WHITE OAK	2" TO 2 1/2" CALIPER	VARIES	B&B	YES	§147-39.C(1)(a) STREET TREES ALONG EXISTING STREETS
QP	13	QUERCUS PHELLOS	WILLOW OAK	2" TO 2 1/2" CALIPER	VARIES	B&B	YES	§147-39.C(1)(a) STREET TREES ALONG EXISTING STREETS
QR	5	QUERCUS RUBRA	NORTHERN RED OAK	2" TO 2 1/2" CALIPER	VARIES	B&B	YES	§147-39.C(1)(c) STREET TREES ALONG ACCESS DRIVEWAYS; §147-39.F(2) TRACT AREA REQ. FOR CANOPY TREES
EVERGREEN TREES								
JV	4	JUNIPERUS VIRGINIANA	EASTERN REDCEDAR	8' HEIGHT	VARIES	B&B	YES	§147-39.D(4)(a)[3] SOFTENING BUFFER-EVERGREEN TREE; §147-39.G(1)(a) STORMWATER FACILITIES §147-39.E(3) PARKING LOT FILTERING BUFFER-EVERGREEN TREE
PS	15	PINUS STROBUS	WHITE PINE	8' HEIGHT	VARIES	B&B	YES	§147-39.D(4)(a)[3] SOFTENING BUFFER-EVERGREEN TREE; §147-39.G(1)(a) STORMWATER FACILITIES
TO	6	THUJA OCCIDENTALIS 'NIGRA'	DARK AMERICAN ARBORVITAE	8' HEIGHT	VARIES	B&B	YES	§147-39.D(5)(a)[1] TRASH ENCLOSURE SCREENING BUFFER
ORNAMENTAL TREES								
AC	8	AMELANCHIER CANADENSIS	SERVICEBERRY	1 1/2" CALIPER	VARIES	#15 CAN	YES	§147-39.D(4)(a)[2] SOFTENING BUFFER-UNDERSTORY TREE; §147-39.G(1)(a) STORMWATER FACILITIES §147-39.D(2) PROPERTY LINE SOFTENING BUFFER-UNDERSTORY TREE
CC	6	CERCIS CANADENSIS	REDBUD	1 1/2" CALIPER	VARIES	#15 CAN	YES	§147-39.D(4)(a)[2] SOFTENING BUFFER-UNDERSTORY TREE; §147-39.G(1)(a) STORMWATER FACILITIES §147-39.D(2) PROPERTY LINE SOFTENING BUFFER-UNDERSTORY TREE
SHRUBS AND GROUNDCOVER								
AAB	7	ARONIA ARBUTIFOLIA 'BRILLIANTISIMA'	CHOKEBERRY	24"-30" HEIGHT	VARIES	#7 CAN	YES	§147-39.D(4)(b)[4] FILTERING BUFFER-DECIDUOUS SHRUB; NATURALIZER
CAB	12	CORNUS ALBA 'BAILHALO' IVORY HALO	IVORY HALO TATARIAN DOGWOOD	24"-30" HEIGHT	VARIES	#7 CAN	---	§147-39.F(3) ADDL. ATTACHED RESID. UNIT PLANTINGS
CS	5	CORNUS SERICEA 'CARDINAL'	CARDINAL REDTWIG DOGWOOD	24"-30" HEIGHT	VARIES	#7 CAN	YES	§147-39.D(4)(b)[4] FILTERING BUFFER-DECIDUOUS SHRUB; §147-39.G(1)(a) STORMWATER FACILITIES
FGB	49	FOTHERGILLA GARDENII 'BLUE MIST'	BLUE MIST FOTHERGILLA	24"-30" HEIGHT	VARIES	#3 CAN	---	§147-39.E(2)(e) PARKING LOT LANDSCAPING; §147-39.F(3) ADDITIONAL ATTACHED RESIDENTIAL UNIT PLANTINGS
HV	15	HAMAMELIS VIRGINIANA	COMMON WITCHHAZEL	24"-30" HEIGHT	VARIES	#7 CAN	YES	§147-39.D(4)(b)[4] FILTERING BUFFER-DECIDUOUS SHRUB; §147-39.G(1)(a) STORMWATER FACILITIES
IG	24	ILEX GLABRA 'SHAMROCK'	SHAMROCK INKBERRY HOLLY	24"-30" HEIGHT	VARIES	#5 CAN	YES	§147-39.F(3) ADDITIONAL ATTACHED RESIDENTIAL UNIT PLANTINGS (EVERGREEN SHRUB)
IVE	6	ILEX VERTICILLATA 'JIM DANDY' (MALE)	JIM DANDY COMMON WINTERBERRY	24"-30" HEIGHT	VARIES	#5 CAN	YES	§147-39.D(4)(b)[4] FILTERING BUFFER-DECIDUOUS SHRUB; §147-39.G(1)(a) STORMWATER FACILITIES; NATURALIZER
	29	ILEX VERTICILLATA 'RED SPRITE' (FEMALE)	RED SPRITE COMMON WINTERBERRY	24"-30" HEIGHT	VARIES	#5 CAN	YES	§147-39.D(4)(b)[4] FILTERING BUFFER-DECIDUOUS SHRUB; §147-39.G(1)(a) STORMWATER FACILITIES; NATURALIZER §147-39.E(2)(e) PARKING LOT LANDSCAPING
RA	8	RHUS AROMATICA 'GRO-LOW'	GRO LOW FRAGRANT SUMAC	6"-12" HEIGHT	VARIES	#3 CAN	---	§147-39.E(2)(e) PARKING LOT LANDSCAPING; DECIDUOUS GROUNDCOVER
RT	5	RHUS TYPHINA 'LACINIATA'	CUTLEAF STAGHORN SUMAC	24"-30" HEIGHT	VARIES	#5 CAN	---	§147-39.D(4)(b)[4] FILTERING BUFFER-DECIDUOUS SHRUB; NATURALIZER §147-39.E(2)(e) PARKING LOT LANDSCAPING
CONSERVATION SEEDING								
ERNST CONSERVATION SEEDS DESIGNATION		SEED MIX NAME		SEEDING RATE	NOTES			
ERNMX-156		LOW-GROWING WILDFLOWER & GRASS MIX		40 LBS/ACRE	WHEN SEEDING, USE ERNST UPLAND & MEADOW SITES ESTABLISHMENT GUIDE; §147-39.G(1)(b) STORMWATER FACILITIES			

RIPARIAN AREA PLANTING SCHEDULE

SYM.	QTY.	BOTANICAL NAME	COMMON NAME	MINIMUM SIZE	SPACING	CONDITION	NOTES
TREES							
AL	13	AMELANCHIER LAEVIS	ALLEGHENY SERVICEBERRY	1 1/2" CALIPER	VARIES	#15 CAN	PROVIDE 5' TUBEX TREE SHELTER (RODENT & DEER PROTECTION)
BN	5	BETULA NIGRA	RIVER BIRCH	2" TO 2 1/2" CALIPER	VARIES	B&B	
NS	3	NYSSA SYLVATICA	BLACK GUM	2" TO 2 1/2" CALIPER	VARIES	B&B	
QB	1	QUERCUS BICOLOR	SWAMP WHITE OAK	2" TO 2 1/2" CALIPER	VARIES	B&B	
SN	5	SALIX NIGRA	BLACK WILLOW	2'-3' HEIGHT	VARIES	#2 CAN	PROVIDE 5' TUBEX TREE SHELTER (RODENT & DEER PROTECTION)
TD	2	TAXODIUM DISTICHUM	BALD CYPRESS	3'-4' HEIGHT	VARIES	#2 CAN	PROVIDE 5' TUBEX TREE SHELTER (RODENT & DEER PROTECTION)
SHRUBS							
IVE	7	ILEX VERTICILLATA 'JIM DANDY' (MALE)	JIM DANDY COMMON WINTERBERRY	24"-30" HEIGHT	VARIES	#5 CAN	
	23	ILEX VERTICILLATA 'RED SPRITE' (FEMALE)	RED SPRITE COMMON WINTERBERRY	24"-30" HEIGHT	VARIES	#5 CAN	

PLANTING LEGEND

RIPARIAN TREES

- AMELANCHIER LAEVIS
- BETULA NIGRA
- NYSSA SYLVATICA
- QUERCUS BICOLOR
- SALIX NIGRA
- TAXODIUM DISTICHUM
- EXISTING SURVEYED TREE (GREATER THAN 6" DBH)

RIPARIAN SHRUBS

- ILEX VERTICILLATA 'JIM DANDY'
- ILEX VERTICILLATA 'RED SPRITE'

SHADE / CANOPY TREES

- QUERCUS BICOLOR
- ACER X FREEMANII 'ARMSTRONG II'
- NYSSA SYLVATICA
- QUERCUS PHELLOS
- QUERCUS RUBRA

EVERGREEN TREES

- JUNIPERUS VIRGINIANA
- PINUS STROBUS
- THUJA OCCIDENTALIS 'NIGRA'

ORNAMENTAL TREES

- AMELANCHIER CANADENSIS
- CERCIS CANADENSIS

SHRUBS

- ARONIA ARBUTIFOLIA 'BRILLIANTISSIMA'
- CORNUS ALBA 'BAILHALO' IVORY HALO
- CORNUS SERICEA 'CARDINAL'
- FOTHERGILLA GARDENII 'BLUE MIST'
- HAMAMELIS VIRGINIANA
- ILEX GLABRA 'SHAMROCK'
- ILEX VERTICILLATA 'JIM DANDY'
- ILEX VERTICILLATA 'RED SPRITE'
- RHUS AROMATICA 'GRO-LOW'
- RHUS TYPHINA 'LACINIATA'

CONSERVATION SEEDING

- ERNMX-156 LOW-GROWING WILDFLOWER & GRASS MIX

TP TP TREE PROTECTION FENCING

ALTERED TREE LINE

GENERAL LANDSCAPE NOTES

1. THE CONTRACTOR SHALL FURNISH AND PLANT ALL PLANTS SHOWN ON THE DRAWINGS, AS SPECIFIED, AND IN QUANTITIES INDICATED ON THE PLANT LIST.
2. ALL PLANTS SHALL BE NURSERY GROWN AND FRESHLY DUG.
3. ALL PLANTS SHALL BE IN ACCORDANCE WITH THE AMERICAN STANDARD FOR NURSERY STOCK (ANSI Z60.1), LATEST EDITION. ALL PLANTS SHALL MEET THE MINIMUM STANDARDS FOR HEALTH, FORM AND ROOT CONDITION AS OUTLINED IN THE AMERICAN ASSOCIATION OF NURSERYMEN (AAN) STANDARDS.
4. ALL PLANTS SHALL BE HARDY UNDER CLIMATIC CONDITIONS SIMILAR TO THOSE IN THE LOCALITY OF THE PROJECT. ALL PLANT MATERIAL SHALL BE HARDY WITHIN THE USDA HARDINESS ZONE 6 APPLICABLE TO MONTGOMERY COUNTY, PENNSYLVANIA.
5. FALL DIGGING HAZARD: ANY SPECIES LISTED BELOW, IF INCLUDED ON THE PLANT LIST, MUST NOT BE DUG IN THE FALL (OCTOBER THROUGH DECEMBER) BECAUSE OF RISK TO THE TREE'S SURVIVAL. SPECIAL EXCEPTIONS MAY BE GRANTED IF THE OWNER IS NOTIFIED IN WRITING AND AN EXTENDED WARRANTY ON THESE PLANTS IS AGREED UPON PRIOR TO DIGGING. THE FOLLOWING VARIETIES SHOULD NOT BE DUG IN FALL: BETULA, CELTIS, CERCIDIPHYLLUM, CRATAEGUS, CRYPTOMERIA, FAGUS, HALESIA, ILEX (TREE VARIETIES), LIQUIDAMBAR, LIRIODENDRON, NYSSA, OSTRYA, PRUNUS, PYRUS, QUERCUS (EXCEPT QUERCUS PALUSTRIS), SALIX (WEEPING VARIETIES), AND TILIA TOMENTOSA. DIGGING FOR MALUS AND ZELKOVA VARIETIES SHOULD BE AVOIDED IN FALL ONLY WHEN IN LEAF.
6. ALL PLANTS SHALL BE TYPICAL OF THEIR SPECIES OR VARIETY AND SHALL HAVE A NORMAL HABIT OR GROWTH. THEY SHALL BE SOUND, HEALTHY AND VIGOROUS, WELL BRANCHED AND DENSELY FOLIATED WHEN IN LEAF. THEY SHALL BE CERTIFIED BY APPROPRIATE STATE AND FEDERAL AUTHORITIES TO BE FREE OF DISEASE AND INSECT PESTS, EGGS OR LARVAE. THEY SHALL HAVE HEALTHY, WELL-DEVELOPED ROOT SYSTEMS.
7. SUBSTITUTIONS: WHEN PLANTS OF A SPECIFIED KIND OR SIZE ARE NOT AVAILABLE WITHIN A REASONABLE DISTANCE, SUBSTITUTIONS MAY BE MADE UPON REQUEST BY THE CONTRACTOR, IF APPROVED BY THE TOWNSHIP AND RESPONSIBLE LANDSCAPE ARCHITECT.
8. MEASUREMENT: DIMENSIONS OF TREES AND SHRUBS SHALL CONFORM TO THE AMERICAN STANDARD FOR NURSERY STOCK, LATEST EDITION. ALL CANOPY TREES SHALL HAVE A MIN. CALIPER OF 2 1/2" AT PLANTING.
9. SIZE: ALL PLANTS SHALL CONFORM TO THE MEASUREMENT SPECIFIED ON THE PLANT LIST, UNLESS AUTHORIZED IN WRITING.
10. BALLED AND BURLAPPED PLANTS SHALL BE DUG WITH FIRM NATURAL BALLS OF EARTH, OF DIAMETER AND DEPTH TO INCLUDE MOST OF THE FIBROUS ROOTS. CONTAINER GROWN STOCK SHALL HAVE BEEN GROWN IN A CONTAINER LONG ENOUGH FOR THE ROOT SYSTEM TO HAVE DEVELOPED SUFFICIENTLY TO HOLD ITS SOIL TOGETHER FIRM AND WHOLE. NO PLANTS SHALL BE LOOSE IN THE CONTAINER.
11. ROOT BALLS OF ALL PLANTS SHALL BE ADEQUATELY PROTECTED AT ALL TIMES FROM SUN AND DRYING WINDS OR FROST.
12. OWNER OR THE OWNER'S REPRESENTATIVE AND THE TOWNSHIP SHALL BE NOTIFIED PRIOR TO BEGINNING PLANTING OPERATIONS.
13. PLANTS WITH BROKEN ROOT BALLS OR EXCESSIVE DAMAGE TO THE CROWN SHALL BE REPLACED PRIOR TO PLANTING.
14. ALL TREES SHALL BE STAKED AND GUYED ACCORDING TO ACCEPTED INDUSTRY PRACTICE.
15. EACH TREE AND SHRUB SHALL BE PRUNED IN ACCORDANCE WITH THE AMERICAN STANDARD FOR NURSERY STOCK (ANSI Z60.1), LATEST EDITION, TO PRESERVE THE NATURAL CHARACTER OF THE PLANT. ALL DEAD WOOD OR SUCKERS AND ALL BROKEN OR BADLY BRUISED BRANCHES SHALL BE REMOVED.
16. MULCH: IMMEDIATELY AFTER PLANTING OPERATIONS ARE COMPLETED, ALL TREES AND SHRUB PLANTING PITS SHALL BE COVERED WITH A 3"(THREE INCH) LAYER OF HARDWOOD MULCH OR OTHER MATERIAL APPROVED BY THE OWNER OR THE OWNER'S REPRESENTATIVE. A GRANULAR PRE-EMERGENT WEED CONTROL SHALL BE SPREAD PRIOR TO MULCHING. THE LIMIT OF THIS MULCH FOR DECIDUOUS TREES AND SINGLE EVERGREEN TREES SHALL BE THE AREA OF THE PIT AS INDICATED ON THE PLANTING DETAILS. FOR EVERGREEN TREE CLUSTERS, A MULCHED BED SHALL BE CREATED.
17. WEED CONTROL: ALL PLANTING AREAS SHALL BE FREE FROM WEEDS PRIOR TO THE BEGINNING OF PLANTING OPERATION. CONTACT HERBICIDE SPRAYS SHOULD ONLY BE USED AS REQUIRED AND ALL MANUFACTURER'S SPECIFICATIONS FOLLOWED.
18. TREES IN LEAF, INCLUDING EVERGREENS, WHEN PLANTED SHALL BE TREATED WITH ANTI-DESICCANT SUCH AS WILT-PRUF IF PLANTED DURING THE MONTHS OF JUNE THROUGH SEPTEMBER, NOVEMBER, AND DECEMBER.
19. PLANTING SOIL SHALL BE THE SAME SOIL THAT CAME OUT OF THE PLANTING PIT OR HOLE. MIX TOPSOIL AND SUBSOIL TOGETHER FOR A UNIFORM PLANTING MIX PRIOR TO BACKFILLING.
20. GUARANTEE: REQUIRED SCREENING, SHADE TREES AND PERIMETER LANDSCAPING SHALL BE PERPETUALLY MAINTAINED. THE APPLICANT SHALL BE RESPONSIBLE FOR PLANTINGS FOR A PERIOD OF EIGHTEEN (18) MONTH MAINTENANCE PERIOD FOLLOWING DEDICATION OF THE IMPROVEMENTS. THE LANDOWNER SHALL BE RESPONSIBLE FOR MAINTENANCE AFTER THIS PERIOD HAS EXPIRED. ANY MATERIAL THAT IS 25% DEAD OR MORE SHALL BE CONSIDERED DEAD AND MUST BE REPLACED AT NO CHARGE. A TREE SHALL BE CONSIDERED DEAD WHEN THE MAIN LEADER HAS DIED BACK, OR THERE IS 25% OF THE CROWN DEAD.
21. ALL PLANTING SHALL BE AT THE LOCATIONS INDICATED ON THE DRAWINGS. THE CONTRACTOR SHALL BE RESPONSIBLE FOR PLANTING AT THE CORRECT GRADES, ALIGNMENT, AND TO THE INDICATED LAYOUT OF THE PLANTING BEDS.
22. LAYOUT OF PLANTING: THE CONTRACTOR SHALL LAY OUT WITH IDENTIFIABLE STAKES THE LOCATION OF ALL PLANTING BEDS AS INDICATED ON DRAWING. THE LAYOUT OF PLANTING SHALL BE APPROVED BY THE RESPONSIBLE LANDSCAPE ARCHITECT PRIOR TO ANY EXCAVATION OF PLANT PITS OR PLANT BEDS.
23. CONDITIONS DETRIMENTAL TO PLANTS: THE CONTRACTOR SHALL NOTIFY THE PROJECT REPRESENTATIVE IN WRITING OF ALL SOIL OR DRAINAGE CONDITIONS WHICH THE CONTRACTOR CONSIDERS DETRIMENTAL TO THE E GROWTH OF PLANTS. THE CONTRACTOR SHALL STATE THE CONDITIONS AND SUBMIT A PROPOSAL FOR CORRECTING THE CONDITIONS, INCLUDING ANY CHANGE IN COST, FOR REVIEW AND ACCEPTANCE BY THE PROJECT REPRESENTATIVE.
24. MINOR ADJUSTMENTS TO TREE LOCATIONS MAY BE NECESSARY DUE TO FIELD CONDITIONS AND FINAL GRADING. THE CONTRACTOR SHALL NOTIFY THE OWNER IF MAJOR ADJUSTMENTS ARE REQUIRED.
25. ALL DEBRIS RESULTING FROM LANDSCAPE CONTRACTING OPERATIONS SHALL BE CLEANED UP AND REMOVED FROM THE SITE ON A WEEKLY BASIS.
26. WATERING: LANDSCAPE CONTRACTOR IS RESPONSIBLE FOR WATERING SUFFICIENTLY AT THE TIME OF PLANTING AND UNTIL THE JOB IS COMPLETED, ACCEPTED AND TURNED OVER TO THE OWNER.
27. FERTILIZE WITH A WATER SOLUBLE FERTILIZER, 2 TO 3 GALLONS PER PLANT USING THE RATES RECOMMENDED ON THE FERTILIZER PRODUCT LABEL (20-20-20 OR SIMILAR ANALYSIS). DO NOT FERTILIZE ANY MORE AT PLANTING TIME OR DURING THE FIRST GROWING SEASON. DO NOT ADD DRY FERTILIZERS TO THE PLANTING MIX.
28. NO PLANTINGS OR STRUCTURES SHALL LOCATED WITHIN EASEMENTS, OR WITHIN 10' OF DEDICATED WATER OR SANITARY SEWER LATERALS.

MAINTENANCE NOTES

A.) REQUIRED PLANT MATERIAL SHALL BE MAINTAINED FOR THE LIFE OF THE PROJECT TO ACHIEVE THE REQUIRED VISUAL EFFECT OF THE BUFFER OR SCREEN. IT SHALL BE THE ULTIMATE RESPONSIBILITY OF SUCCESSIVE PROPERTY OWNERS TO INSURE THAT THE REQUIRED PLANTINGS ARE PROPERLY MAINTAINED. DEAD OR DISEASED PLANT MATERIAL SHALL BE REMOVED OR TREATED PROMPTLY BY THE PROPERTY OWNER AND REPLACED AT THE NEXT GROWING SEASON.

B.) SAFETY – ALL SIGHT TRIANGLES SHALL REMAIN CLEAR, AND ANY PLANT MATERIAL THAT COULD ENDANGER SAFETY SUCH AS UNSTABLE LIMBS SHALL BE REMOVED AND THE PLANT MATERIAL REPLACED IF NECESSARY. IT SHALL BE THE RESPONSIBILITY OF THE PROPERTY OWNER TO MAINTAIN ALL PLANTINGS AND ARCHITECTURAL ELEMENTS TO INSURE A SAFE ENVIRONMENT.

C.) A CLEAR SIGHT TRIANGLE, ORIGINATING FROM THE INTERSECTION OF THE PROPOSED DRIVEWAY WITH FOREST LANE, SHALL BE MAINTAINED IN ACCORDANCE WITH CHAPTER 147, ARTICLE IV, SECTION 147-27 AND CHAPTER 176, ARTICLE XIX, SECTION 176-137.

REFERENCE NOTE

REFER TO SITE IMPROVEMENT DETAILS (SHEET 17) FOR:

- LANDSCAPING PLANTING DETAILS
- LIGHT SPECIFICATIONS AND ORDER GUIDE

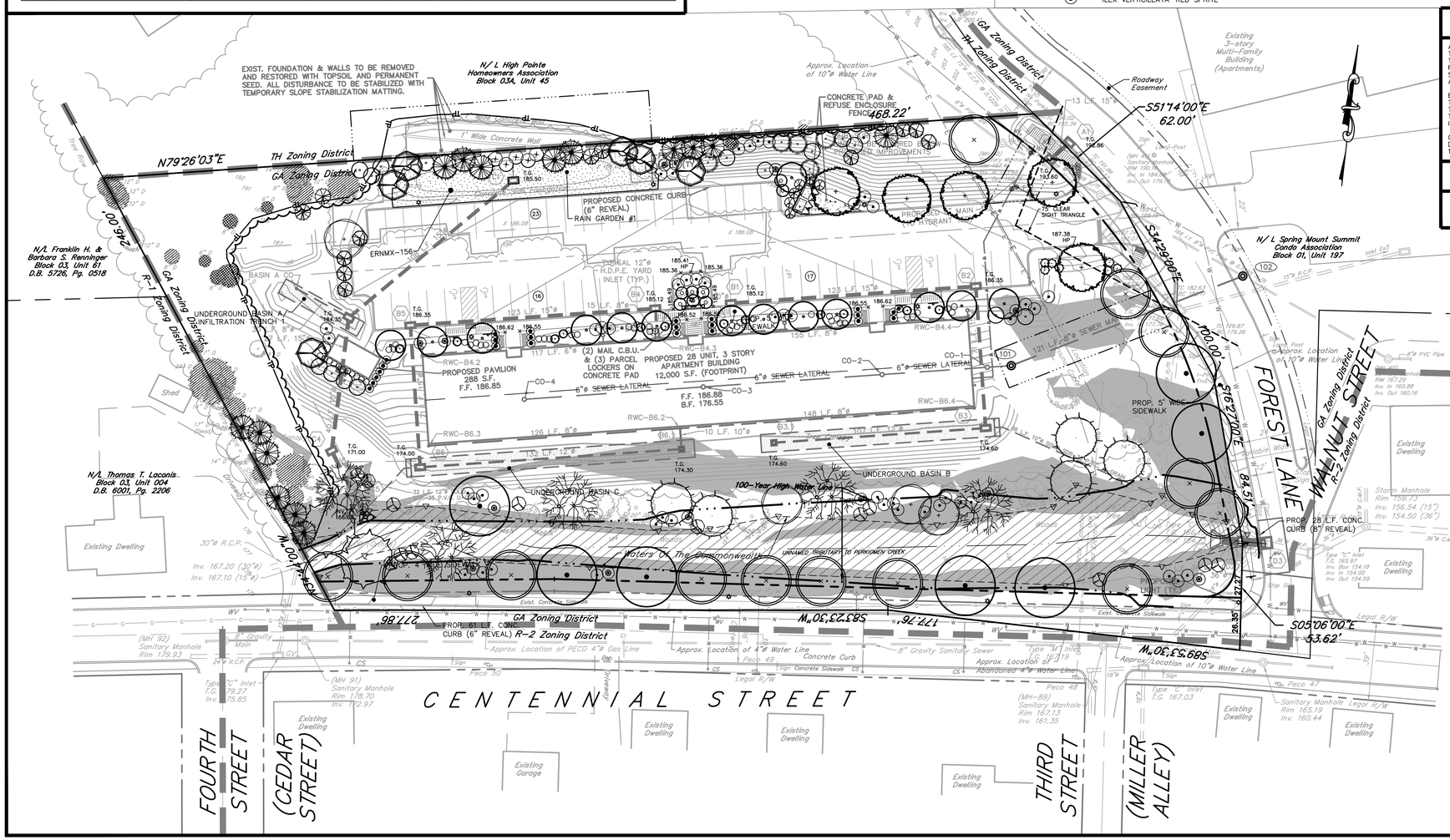

DRAWING SCALE: 1"= 30 '

THIS DRAWING IS NOT TO BE USED FOR CONSTRUCTION UNLESS STAMPED: "ISSUED FOR CONSTRUCTION"

No.	REVISION	DATE
11	REVISED PER BOROUGH EMAIL COMMENTS (10/09/18)	OCTOBER 24, 2018
10	REVISED PER BOROUGH EMAIL COMMENTS (07/06/18) & 07/09/18)	AUGUST 16, 2018
9	REVISED PER BOROUGH LTR. (12/20/17), SEWER AUTH. LTR. (01/31/18)	JUNE 5, 2018
8	REVISED PER MCCD TECHNICAL REVIEW (03/12/18)	MAY 4, 2018
7	REVISED PER MCCD ADMINISTRATIVE INCOMPLETENESS REVIEW (01/09/18)	JANUARY 16, 2018
	(SEE COVER SHEET FOR COMPLETE LIST OF PLAN REVISION)	
	PLAN ORIGINATION DATE	JUNE 24, 2016

LANDSCAPING PLAN

AS PART OF

CENTENNIAL APARTMENTS

PREPARED FOR

HOFF PROPERTIES, LLC

SITE SITUATE IN

SCHWENKSVILLE BOROUGH, MONTGOMERY COUNTY, PA

Richard C. Mast Associates, P.C.
Consulting Engineers and Surveyors
www.rcmaonline.com
The Village at Lederach
658 Harleysville Pike, Suite 150
Harleysville, PA 19438
(215) 513-2100

DRAFTED BY	PROJ. MNGR.	PROJECT NO.	DRAWING NO.
R.A.F.	D.B.C.	2800	5 OF 22

Q:\ProjectAdmin\2800 Series\2800 Hoff - Centennial Street Apartments\6 Project CAD Files\2800 05 ZLAND

Centennial Apartments - Schwenksville, PA - Calculations

Photometric Study

THE CALCULATIONS ASSUMES A 13' HIGH POST WHICH ACCOMMODATES A SPRING CITY WILLIAM AND MARY LED LUMINAIRE.

THE CALCULATION USES (4) WILLIAM AND MARY 80 WATT LED - 3000K - TYPE III (REFER TO LP29529); (7) WILLIAM AND MARY 80 WATT LED - 3000K - TYPE III (REFER TO S103272).

THE WILLIAM AND MARY LUMINAIRE ON WILL UTILIZE (72) CREE LED CHIPS AT 80 WATTS. THE COLOR TEMPERATURE WILL BE 3000K AND HAVE A TYPE III DISTRIBUTION.

THE LIGHT LOSS FACTOR FOR THE WILLIAM AND MARY IS 0.81:
LUMEN DEPRECIATION: 0.90
DIRT DEPRECATION: 0.90

CENTENNIAL STREET TO MEET IES RP-8-00 STANDARDS FOR COLLECTOR ROADWAY WITH A LOW PEDESTRIAN CONFLICT.

THE ROADWAY REQUIREMENTS:
0.6 FC AVERAGE (MINIMUM)
4:1 UNIFORMITY (MAXIMUM)

IF YOU HAVE ANY QUESTIONS OR CONCERNS PLEASE CONTACT:

TAD BARTON
DESIGN ENGINEER
SPRING CITY ELECTRICAL MFG. CO.
610-948-4000 EXT. 252

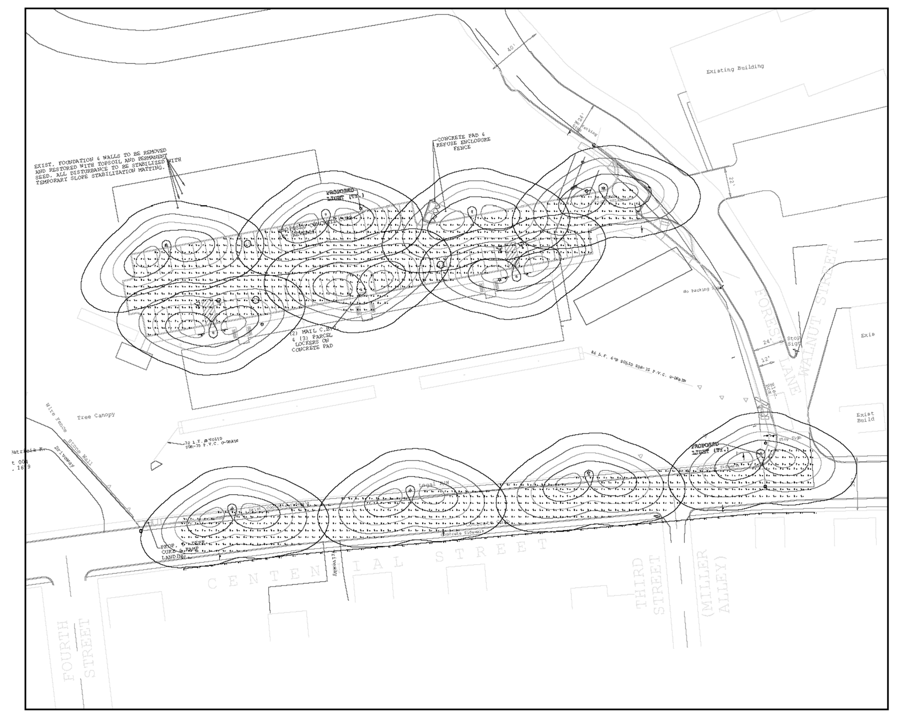

Luminaire Schedule

Symbol	Qty	Label	Arrangement	Total Lamp Lumens	LLF	Description
⊙	11	WMM-LE080-X2-30-CR3-YPBP	SINGLE	N.A.	0.810	ALMWMM-LE080_EVX_X2-30-CR3-YPBP

Calculation Summary

Label	CalcType	Units	Avg	Max	Min	Avg/Min	Max/Min
Centennial Street	Illuminance	Fc	0.66	3.3	0.2	3.30	16.50
Centennial Street Sidewalk	Illuminance	Fc	1.52	3.6	0.2	7.60	18.00
Mailbox	Illuminance	Fc	1.40	3.1	0.6	2.33	5.17
Parking Lot	Illuminance	Fc	0.95	3.7	0.3	3.17	12.33
Property Line	Illuminance	Fc	0.10	0.1	0.1	1.00	1.00

Spring City Electrical Mfg. Co. — 1 South Main Street Spring City, PA 19475

Prepared By: T. Barton — Software: AGI 32

Date: July 20, 2018 — Project Name : Centennial Apartments - Schwenksville, PA

This drawing is property of Spring City Elect. Mfg. and is issued to the recipient with the understanding that it shall not be copied, duplicated, passed on to unauthorized parties, nor used for any purpose other than that for which it is specifically furnished except with Spring City's written permission.

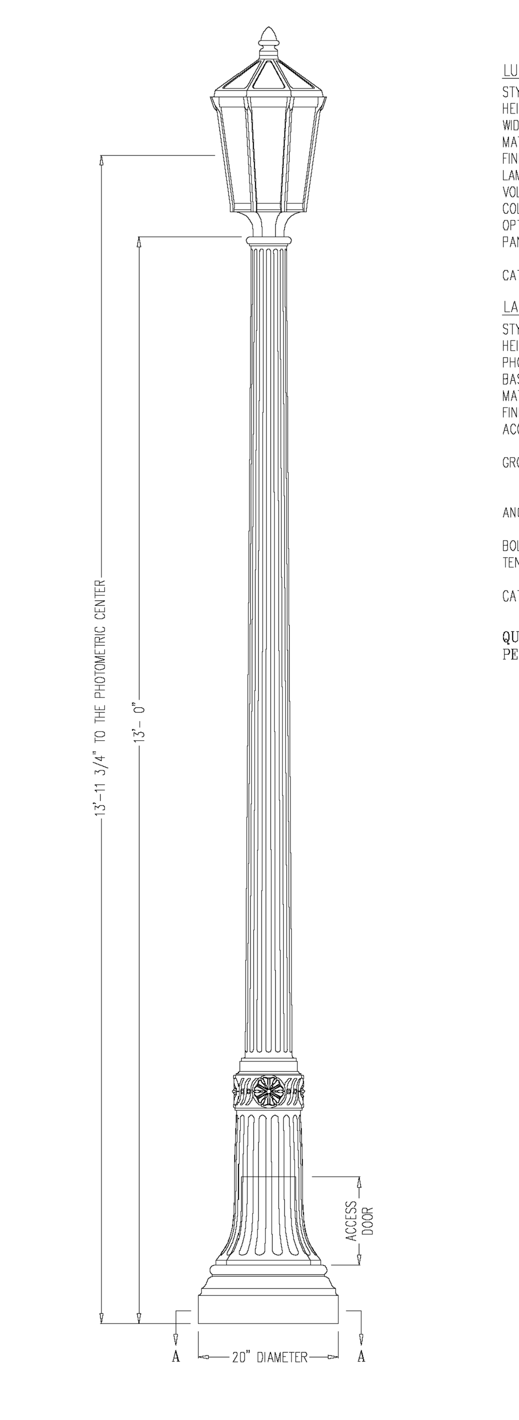

LUMINAIRE SPECIFICATIONS

STYLE: WILLIAM AND MARY MEDIUM
HEIGHT: 2'-6 3/16"
WIDTH: 1'-4 5/8" OCTAGONAL
MATERIAL: CAST ALUMINUM ALLOY ANSI 356 PER A.S.T.M. B26-95
FINISH: POWDER COAT - RIVER TEXTURE GLOSS BLACK
LAMPING: 80 WATT LED SYSTEM
VOLTAGE: ELECTRONIC WIRED AT 120-277 VOLTS
COLOR TEMP: 4000K (MEDIUM WHITE)
OPTICS: TYPE III REFRACTIVE OPTICS (ASYMMETRIC DISTRIBUTION)
PANELS: PEBBLED ACRYLIC

CATALOG NO. ⚠ALMWMM-LE080/EVX/X2-40-CR3-YPBP-FGV-CU

LAMP POST SPECIFICATIONS

STYLE: NORTHAMPTON
HEIGHT: 13'-0"
PHOTOMETRIC CENTER: 13'-11 3/4"
BASE: 20" DIA.
MATERIAL: CAST DUCTILE IRON PER A536-84 GRADE 65-45-12
FINISH: POWDER COAT - RIVER TEXTURE GLOSS BLACK
ACCESS DOOR: LOCATED IN BASE SECURED WITH TAMPER PROOF HEX SOCKET SECURITY MACHINE SCREWS
GROUND PROVISIONS: DRILL AND TAP INSIDE WALL OF BASE OPPOSITE ACCESS DOOR 1/4-20 TO ACCOMMODATE GROUND STUD (STUD BY OTHERS)
ANCHOR BOLTS: (4) 3/4" X 24" + 3" HOOK (FULLY GALVANIZED WITH 1 GALVANIZED NUT AND 1 GALVANIZED WASHER PER BOLT)
BOLT PROJECTION: 3" REQ'D
TENON: 3 1/2" DIA. X 3" HIGH

CATALOG NO.: DPSNRT-20-13.00-TN3.50/3.00-CU

QUANTITY .... 3 COMPLETE ASSEMBLIES REQUIRED
PER S.O. #: 016117

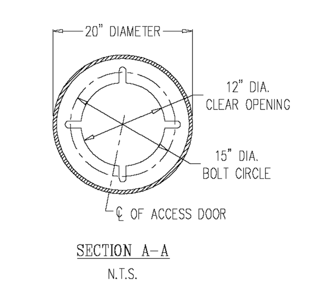

SECTION A-A
N.T.S.

⚠ REVISED BY: DAK			DATE: 08-16-16
Spring City Electrical Mfg. Co. HALL AND MAIN STREETS - P.O. BOX 19 - SPRING CITY, PA. 19475 PHONE (610) 948-4000 - FAX (610) 948-5577 - WWW.SPRINGCITY.COM			
DESCRIPTION	THE NORTHAMPTON 13'-0" DUCTILE LAMP POST WITH THE WILLIAM AND MARY LED LUMINAIRE		
CUSTOMER / JOB	SCHWENKSVILLE, PA		
SCALE N.T.S.	DRAWN BY: Y.V.	DATE 02-29-2016	DRAWING NO. LP-29529

PROPOSED LIGHTING DETAILS

LIGHTING NOTES:

1. SITE LIGHTING TO BE DESIGNED AND INSTALLED IN ACCORDANCE WITH ZO. CHAPTER 176 ARTICLE XVII EXTERIOR LIGHTING AND THE 10TH EDITION IESNA HANDBOOK.
2. PROPOSED INTERNAL SITE LIGHTING (ALONG PRIMARY ACCESS DRIVE) SHALL BE INSTALLED AND OWNED/MAINTAINED/ENERGIZED BY THE DEVELOPER/OWNER.
3. STREET LIGHTS PROPOSED ALONG CENTENNIAL STREET AND AT THE CENTENNIAL STREET/FOREST LANE INTERSECTION SHALL BE INSTALLED BY THE DEVELOPER/OWNER AND OWNED/MAINTAINED/ENERGIZED BY SCHWENKSVILLE BOROUGH.
4. THE PROPOSED LIGHTS ADJACENT TO THE PROPOSED BUILDING SHALL BE EQUIPPED WITH A HOUSE SIDE SHIELD ON THE LUMINAIRE TO ELIMINATE BACKLIGHT INTO WINDOWS.
5. PROPOSED LIGHTS SHALL BE EQUIPPED WITH A BUTTON TYPE PHOTOCELL.
6. PROPOSED LIGHTS ALONG CENTENNIAL STREET SHALL BE EQUIPPED WITH CUTOFF FIXTURES TO COMPLY WITH ZO SECTION 176-115.C(6), 0.1 FC ON ADJACENT PROPERTIES.

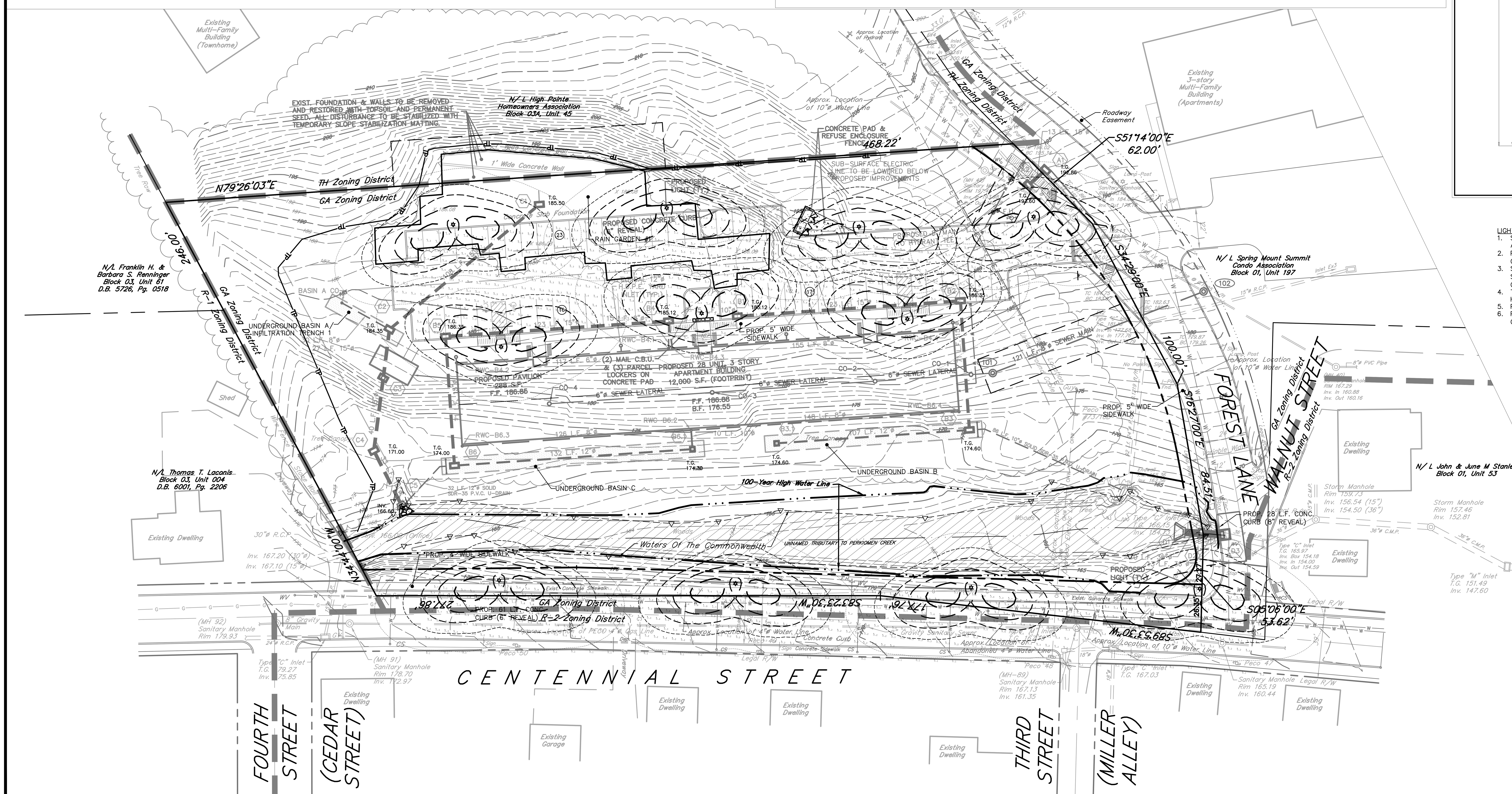

ISOLUX CONTOUR LEGEND

LIGHT POLE ☼
2.0 FC
1.0 FC
0.5 FC
0.25 FC
0.10 FC

* FC=FOOT CANDLES

30 0 15 30 60 90
DRAWING SCALE: 1"=30'

THIS DRAWING IS NOT TO BE USED FOR CONSTRUCTION UNLESS STAMPED: "ISSUED FOR CONSTRUCTION"

No.	REVISION	DATE
11	REVISED PER BOROUGH EMAIL COMMENTS (10/09/18)	OCTOBER 24, 2018
10	REVISED PER BOROUGH EMAIL COMMENTS (07/06/18) & 07/09/18)	AUGUST 16, 2018
9	REVISED PER BOROUGH LTR. (12/20/17), SEWER AUTH. LTR. (01/31/18)	JUNE 5, 2018
8	REVISED PER MCCD TECHNICAL REVIEW (03/12/18)	MAY 4, 2018
7	REVISED PER MCCD ADMINISTRATIVE INCOMPLETENESS REVIEW (01/09/18)	JANUARY 16, 2018
	(SEE COVER SHEET FOR COMPLETE LIST OF PLAN REVISION)	
	PLAN ORIGINATION DATE	JUNE 24, 2016

LIGHTING PLAN

AS PART OF

CENTENNIAL APARTMENTS

PREPARED FOR

HOFF PROPERTIES, LLC

SITE SITUATE IN

SCHWENKSVILLE BOROUGH, MONTGOMERY COUNTY, PA

Richard C. Mast Associates, P.C.
Consulting Engineers and Surveyors
www.rcmaonline.com
The Village at Lederach
658 Harleysville Pike, Suite 150
Harleysville, PA 19438
(215) 513-2100

DRAFTED BY	PROJ. MNGR.	PROJECT NO.	DRAWING NO.
R.A.F.	D.B.C.	2800	6 OF 22

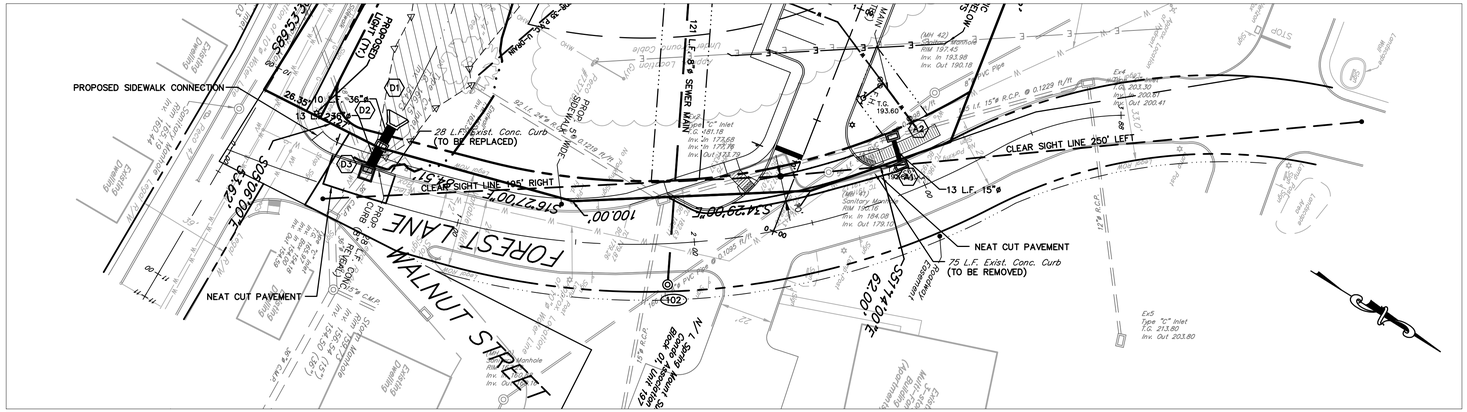

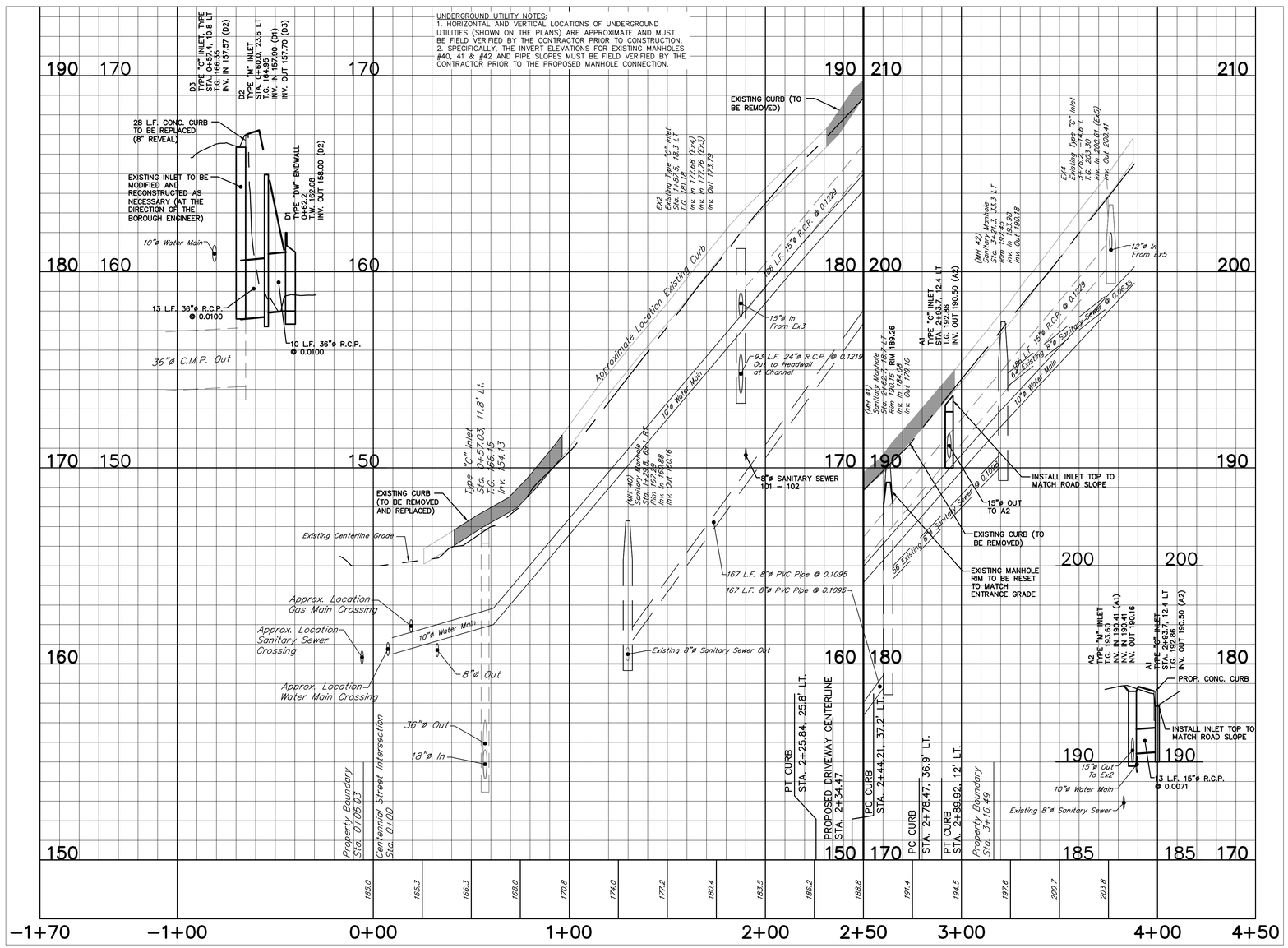

UNDERGROUND UTILITY NOTE

PENNSYLVANIA ONE CALL SYSTEM, INC. 1-800-242-1776 STOP-CALL BEFORE YOU DIG!

LOCATIONS OF EXISTING UTILITIES SHOWN HEREON ARE BASED ON INFORMATION RECEIVED FROM FACILITY OWNERS FOLLOWING A CALL TO PA ONE CALL SYSTEM, INC. COMPLETENESS OR ACCURACY OF TYPE, SIZE, DEPTH, OR HORIZONTAL LOCATION OF UTILITIES CANNOT BE GUARANTEED. CONTRACTORS MUST VERIFY THE LOCATION AND DEPTH OF UNDERGROUND UTILITIES BEFORE THE START OF WORK BY NOTIFYING FACILITY OWNERS, THROUGH THE PA ONE CALL SYSTEM (1–800–242–1776 OR 811), NOT LESS THAN 3 BUSINESS DAYS NOR MORE THAN 10 BUSINESS DAYS IN ADVANCE OF BEGINNING EXCAVATION OR DEMOLITION WORK PER THE REQUIREMENTS OF PA ACTS 287 AND 121, AS AMENDED.

DESIGN SERIAL NO.: 20131061391 (04–16–2013)

CONSTRUCTION NOTES

1. ALL UTILITIES SHALL BE PROVIDED BY UNDERGROUND SERVICE.
2. ALL STORM STRUCTURES SHALL CONFORM TO PENN.D.O.T. FORM 408/LATEST EDITION. ALL CURB INLETS SHALL BE PENN. D.O.T. 4' TYPE "C" INLETS WITH BICYCLE SAFE STRUCTURAL STEEL GRATES. ROADWAY INLETS PROPOSED ALONG MOUNTABLE CURB SHALL BE TYPE "M" INLETS AND INSTALLED ADJACENT TO THE THE CURB FACE. ALL LAWN AREA/ROADSIDE SWALE AREA INLETS SHALL BE PENN. D.O.T. 4' TYPE "M". TYPE "M" INLETS WITHIN ROADWAYS SHALL HAVE BICYCLE SAFE STRUCTURAL STEEL GRATES.
3. ALL STORM SEWER PIPING SHALL BE REINFORCED CONCRETE PIPE AND SHALL CONFORM TO PENN. D.O.T FORM 408/LATEST EDITION, SECTION 601.
4. THE TOP OF GRATE ELEVATION FOR ALL TYPE "C" STORM SEWER INLETS IS FOR THE CENTER OF THE INLET AT THE FACE OF CURB. THE CONTRACTOR IS RESPONSIBLE FOR PROJECTING THE ROADWAY GRADE ALONG THE LENGTH OF THE INLET. THE TOP OF GRATE ELEVATION FOR ALL TYPE "M" STORM SEWER INLETS IS FOR THE CENTER/MIDDLE OF THE INLET.
5. ALL CONSTRUCTION SHALL CONFORM TO SCHWENKSVILLE BOROUGH, THE SCHWENKSVILLE BOROUGH AUTHORITY, AND/OR PECO ENERGY SPECIFICATIONS AND STANDARDS, WHICHEVER IS GREATER. INTERPRETATION SHALL REST WITH THE BOROUGH ENGINEER, OR HIS REPRESENTATIVE IN THE FIELD.
6. ALL SANITARY SEWER MATERIALS AND CONSTRUCTION SHALL BE IN CONFORMANCE WITH THE STANDARDS AND SPECIFICATIONS OF THE SCHWENKSVILLE BOROUGH AUTHORITY. GRAVITY SANITARY SEWER SERVICE WILL BE PROVIDED TO THE BASEMENT ELEVATION OF THE BUILDING. ALL SANITARY SEWER MAINS SHALL BE 8 INCH (DIA.) SDR 26 PVC PIPE, OR EPOXY LINED DUCTILE IRON PIPE FOR MAINS INSTALLED AT A DEPTH OF GREATER THAN FIFTEEN FEET. ALL LATERALS SHALL BE 6 INCH (DIA.) SDR 26 PVC PIPE OR EPOXY LINED DUCTILE IRON PIPE AS SHOWN ON THE PLANS. SANITARY SEWER LATERALS SHALL BE LAID ON A SLOPE OF NOT LESS THAN 1%.
7. THE PROPOSED SANITARY SEWER MAIN CONNECTION TO THE EXISTING SYSTEM SHALL BE VIA INSTALLATION OF A STANDARD MANHOLE. EXISTING MAIN SHALL BE CONNECTED TO THE NEW MANHOLE WITH SDR 26 PVC STUBS AND SOLID SLEEVE TYPE REPAIR COUPLINGS.
8. ALL WATER FACILITIES MATERIALS AND CONSTRUCTION SHALL BE IN CONFORMANCE WITH THE STANDARDS AND SPECIFICATIONS OF THE SCHWENKSVILLE BOROUGH AUTHORITY. ALL WATER MAINS SHALL BE PRESSURE CLASS 350 PIPE. A VALVE AND VALVE BOX SHALL BE INSTALLED OUTSIDE OF THE BUILDING. MEGA-LUG JOINT RESTRAINTS SHALL BE INSTALLED ON VALVES, FIRE HYDRANTS, BENDS, AND JOINTS WITHIN 30 FEET OF CHANGES IN ALIGNMENT. FITTINGS AND PIPE TO BE RESTRAINED WITH MEGA-LUGS REQUIRE MECHANICAL JOINTS.
9. ALL WATER MAINS AND SANITARY SEWER LINES SHALL HAVE A MINIMUM OF FOUR (4) FEET OF COVER. NO OTHER UNDERGROUND UTILITIES, INCLUDING BUT NOT LIMITED TO ELECTRIC, TELEPHONE, CABLE, GAS OR STREET LIGHTS, SHOULD BE INSTALLED WITHIN FIVE FEET (HORIZONTAL DISTANCE) OF THE WATER MAIN.
10. A HORIZONTAL SEPARATION OF 10 FEET AND/OR A VERTICAL CLEARANCE OF 18 INCHES SHALL BE MAINTAINED BETWEEN THE SANITARY SEWER AND ANY OTHER UTILITY PIPELINES. WHERE PIPELINES MUST CROSS UNDER A SEWER, THE INSTALLATION MUST ALSO PROVIDE ADEQUATE STRUCTURAL SUPPORT FOR THE SEWER TO PREVENT DEFLECTION AND BREAKING OF THE SEWER. WHERE PROPER CLEARANCES CAN NOT BE PROVIDED, CONCRETE PIER SUPPORTS SHALL BE INSTALLED ON EITHER SIDE OF THE SEWER PIPE AT THE CONFLICT.
11. NO PLANTINGS, STRUCTURES, OR LIGHT POLES SHALL BE LOCATED WITHIN SANITARY SEWER, WATER, OR STORM SEWER EASEMENTS. NO PLANTINGS OR STRUCTURES SHALL BE LOCATED WITHIN 10 FEET OF THE SANITARY SEWERS OR LATERALS AND WATER MAINS OR SERVICES.
12. ROOF DRAINS SHALL BE OUTLETTED INTO STORM INLETS ASSOCIATED WITH UNDERGROUND STORMWATER BMPs AS SHOWN.
13. ALL SURFACE AREAS SHALL BE PROPERLY GRADED TO ENSURE PROPER DRAINAGE FLOW, AWAY FROM BUILDINGS TO NEAREST INLET OR WATERCOURSE WITHOUT PONDING OR OBSTRUCTION. A MINIMUM OF 2% SLOPE SHALL BE PROVIDED ON ALL GRASSED AREAS EXCEPT BASIN BOTTOMS AND OTHER BMPS, WHICH ARE DESIGNED TO BE FLAT BMP AREAS.
14. ANY SPRING ENCOUNTERED DURING ROADWAY CONSTRUCTION SHALL BE OUTLETTED BY U-DRAIN TO NEAREST STORM SEWER FACILITY OR WATERCOURSE. U-DRAIN PLACEMENT TO BE BY THE DIRECTION OF THE BOROUGH ENGINEER.
15. UNDER-DRAINS WITHIN DRAINAGE SWALES AND STORMWATER BMPS SHALL BE 4"Ø PERFORATED H.D.P.E. PIPE (OR APPROVED EQUAL) SURROUNDED BY MIN. 6" OF CRUSHED STONE.
16. DWELLING FOUNDATIONS SHOULD BE WATERPROOFED TO PREVENT POTENTIAL WATER PROBLEMS CAUSED BY RUNOFF THAT IS MANAGED WITHIN THE SUBSURFACE STORMWATER MANAGEMENT FACILITIES.
17. NO TOPSOIL SHALL BE REMOVED FROM THE SITE OR USED AS SPOIL. TOPSOIL MUST BE REMOVED FROM THE AREAS OF CONSTRUCTION AND STORED SEPARATELY. UPON COMPLETION OF THE CONSTRUCTION, THE TOPSOIL MUST BE REDISTRIBUTED ON THE SITE UNIFORMLY. ALL AREAS OF THE SITE SHALL BE STABILIZED BY SEEDING OR PLANTING ON SLOPES OF LESS THAN 10% AND SHALL BE STABILIZED BY SODDING ON SLOPES 10% OR MORE AND PLANTED IN GROUND COVER ON SLOPES 20% OR MORE.
18. MAIL DELIVERY FOR ALL UNITS TO BE VIA CLUSTER BOX UNIT (CBU) AND OUTDOOR PARCEL LOCKER MEETING THE SPECIFICATIONS AND STANDARDS OF THE U.S.P.S. (PUBLICATION 265-A, OCT. 2013). SALSBURY INDUSTRIES MODELS #3316 CBU AND #3302 LOCKER, OR APPROVED EQUALS. COLOR AND APPURTENANCES TO BE SELECTED BY OWNER.
19. TWO (2) ANCHORED BENCHES WITH SAFETY SURFACES ARE PROPOSED ON EITHER SIDE OF EACH BUILDING ENTRANCE. BENCHES MANUFACTURED BY COLUMBIA CASCADE, MODEL NUMBER 2118-6 (TIMBERFORM RESTORATION) OR EQUAL (SEE DETAIL).
20. A PRE-CONSTRUCTION MEETING WITH THE REPRESENTATIVES OF THE SCHWENKSVILLE BOROUGH AUTHORITY'S ENGINEER IS MANDATORY BEFORE THE START OF CONSTRUCTION. A TAPPING FEE AGREEMENT MUST ALSO BE EXECUTED WITH THE SCHWENKSVILLE BOROUGH AUTHORITY BEFORE CONSTRUCTION. AFTER CONSTRUCTION, IT IS THE RESPONSIBILITY OF THE DEVELOPER TO SUPPLY RECORD DRAWINGS TO THE SCHWENKSVILLE BOROUGH AUTHORITY'S ENGINEER FOR REVIEW AND APPROVAL.
21. ALL ROOF GUTTERS SHALL BE EQUIPPED WITH DEBRIS SCREENING. UTILIZE METAL OR PLASTIC MESH CAPABLE OF PREVENTING LEAVES, BRANCHES, AND TRASH FROM ENTERING THE ROOF DRAIN SYSTEM DISCHARGING INTO THE UNDERGROUND STORMWATER FACILITY.

SIGHT DISTANCE NOTE

PROPOSED MULTI–FAMILY USE DRIVEWAY

1. ALL SIGHT DISTANCE OBSTRUCTIONS (INCLUDING BUT NOT LIMITED TO EMBANKMENTS AND VEGETATION) SHALL BE REMOVED BY THE LAND OWNER TO PROVIDE A MINIMUM OF **250** FEET OF CONTINUOUS SIGHT DISTANCE TO THE LEFT AND **195** FEET OF CONTINUOUS SIGHT DISTANCE TO THE RIGHT FOR A DRIVER EXITING THE PROPOSED DRIVEWAY. THE DRIVER MUST BE CONSIDERED TO BE POSITIONED 10 FEET FROM THE NEAR EDGE OF THE CLOSEST HIGHWAY THROUGH TRAVEL LANE (FROM THE CURB LINE IF CURBING IS PRESENT) AT AN EYE HEIGHT OF THREE FEET–SIX INCHES (3'–6") ABOVE THE PAVEMENT SURFACE. THE POINT SIGHTED BY THE EXITING DRIVER SHALL BE THREE FEET–SIX INCHES (3'–6") ABOVE THE PAVEMENT SURFACE LOCATED IN THE CENTER OF THE CLOSEST HIGHWAY TRAVEL LANE DESIGNATED FOR USE BY APPROACHING TRAFFIC. THIS SIGHT DISTANCE SHALL BE MAINTAINED BY THE LAND OWNER.

Sight Distance Summary

Proposed Multi-family Use Driveway along Forest Lane

Movement	Direction	Vehicle Speed[1]	Approach Grade	Sight Distance (feet) Min. Allowable[2]	Required[3]	Available[4]
Exiting	To the Left	25 mph	-13.7%	220	250	250
	To the Right	25 mph	15.9%	137	195	195

1. Posted Speed Limit
2. Based on PENNDOT minimum acceptable sight distance values per PA Code, Title 67, Chapter 441.8.h.2.iv.
3. Based on PENNDOT minimum acceptable sight distance values per PA Code, Title 67, Chapter 441.8.h.1, Table 1 Safe Sight Distance
4. Existing (measured) sight distance

PENNDOT Minimum Acceptable Sight Distance $(1.47*V*2.5+V^2/30(0.3+g/100))$

30 0 15 30 60 90

DRAWING SCALE: 1"= 30 '

THIS DRAWING IS NOT TO BE USED FOR CONSTRUCTION UNLESS STAMPED: "ISSUED FOR CONSTRUCTION"

No.	REVISION	DATE
11	REVISED PER BOROUGH EMAIL COMMENTS (10/09/18)	OCTOBER 24, 2018
10	REVISED PER BOROUGH EMAIL COMMENTS (07/06/18) & 07/09/18)	AUGUST 16, 2018
9	REVISED PER BOROUGH LTR. (12/20/17), SEWER AUTH. LTR. (01/31/18)	JUNE 5, 2018
8	REVISED PER MCCD TECHNICAL REVIEW (03/12/18)	MAY 4, 2018
7	REVISED PER MCCD ADMINISTRATIVE INCOMPLETENESS REVIEW (01/09/18)	JANUARY 16, 2018
	(SEE COVER SHEET FOR COMPLETE LIST OF PLAN REVISION)	
	PLAN ORIGINATION DATE	JUNE 24, 2016

PLAN AND PROFILE
FOREST LANE

AS PART OF

CENTENNIAL APARTMENTS

PREPARED FOR

HOFF PROPERTIES, LLC

SITE SITUATE IN

SCHWENKSVILLE BOROUGH, MONTGOMERY COUNTY, PA

RICHARD C. MAST ASSOCIATES, P.C. RCMA

Richard C. Mast Associates, P.C.
Consulting Engineers and Surveyors
www.rcmaonline.com

The Village at Lederach
658 Harleysville Pike, Suite 150
Harleysville, PA 19438
(215) 513-2100

DRAFTED BY	PROJ. MNGR.	PROJECT NO.	DRAWING NO.
R.A.F.	D.B.C.	2800	7 OF 22

G:\ProjectAdmin\2800 Series\2800 Hoff – Centennial Street Apartments\6 Project CAD Files\2800 07 PFOREST

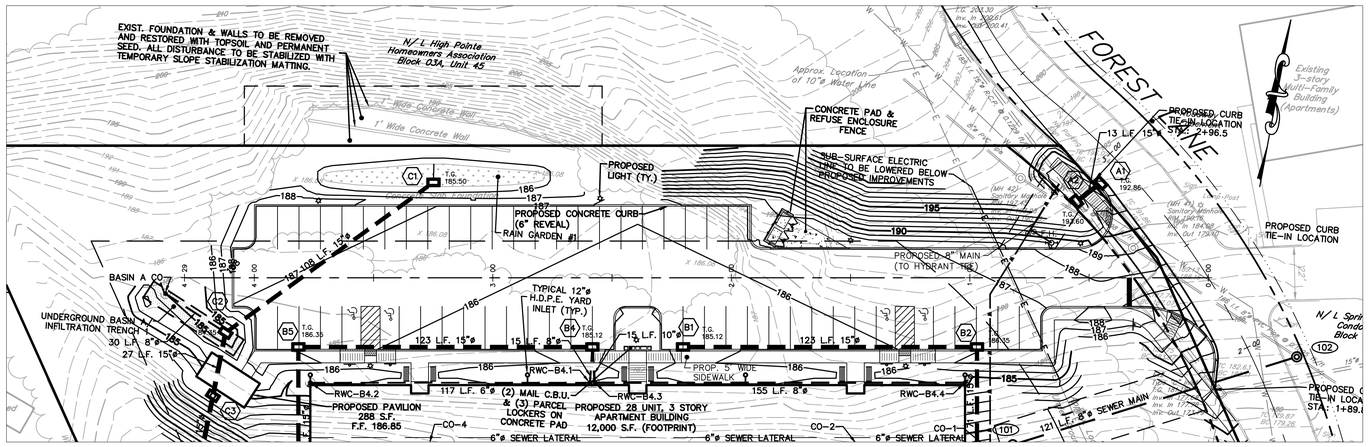

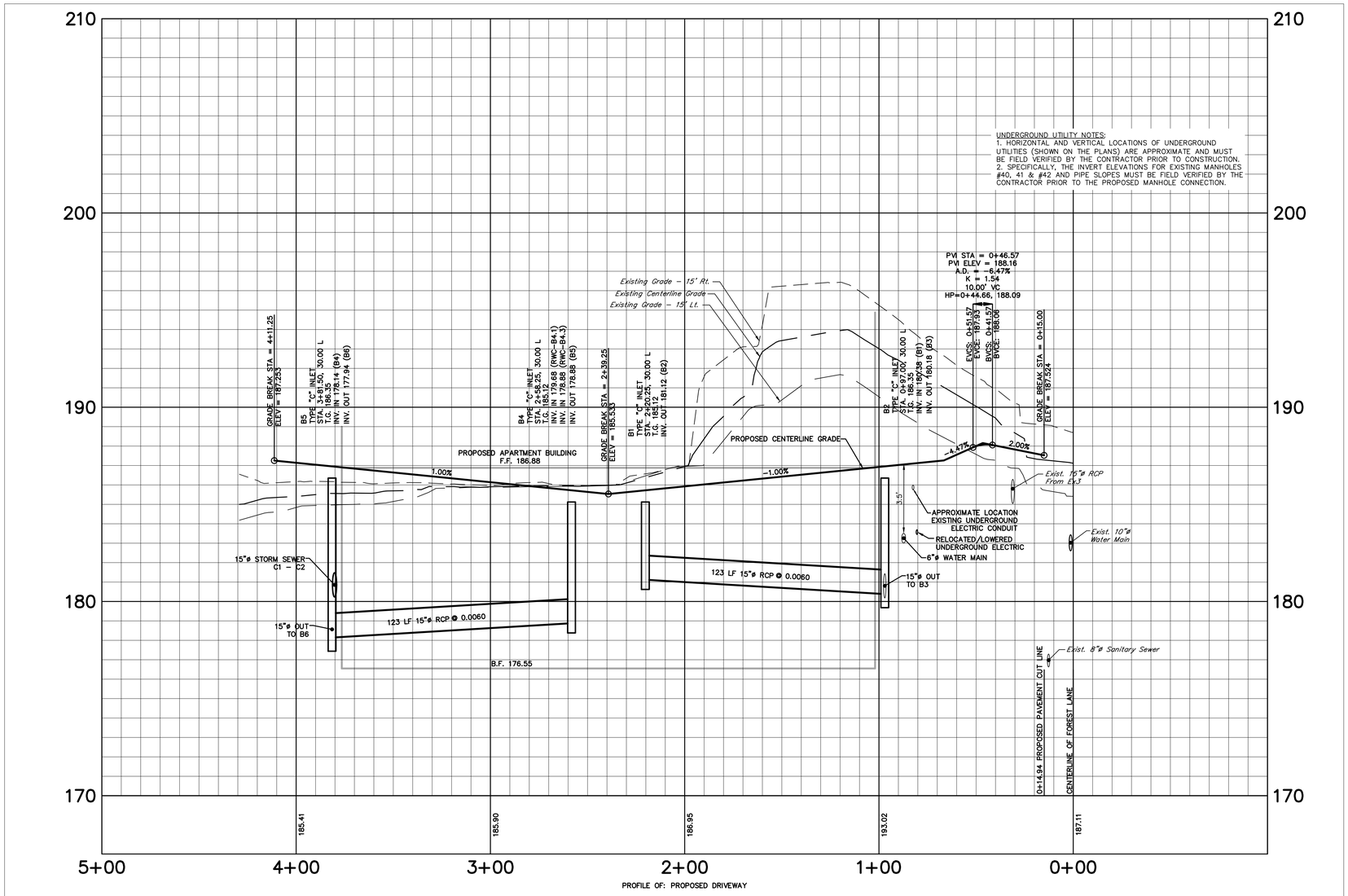

PROFILE OF: PROPOSED DRIVEWAY

CONSTRUCTION NOTES

1. ALL UTILITIES SHALL BE PROVIDED BY UNDERGROUND SERVICE.
2. ALL STORM STRUCTURES SHALL CONFORM TO PENN.D.O.T. FORM 408/LATEST EDITION. ALL CURB INLETS SHALL BE PENN. D.O.T. 4' TYPE "C" INLETS WITH BICYCLE SAFE STRUCTURAL STEEL GRATES. ROADWAY INLETS PROPOSED ALONG MOUNTABLE CURB SHALL BE TYPE "M" INLETS AND INSTALLED ADJACENT TO THE THE CURB FACE. ALL LAWN AREA/ROADSIDE SWALE AREA INLETS SHALL BE PENN. D.O.T. 4' TYPE "M". TYPE "M" INLETS WITHIN ROADWAYS SHALL HAVE BICYCLE SAFE STRUCTURAL STEEL GRATES.
3. ALL STORM SEWER PIPING SHALL BE REINFORCED CONCRETE PIPE AND SHALL CONFORM TO PENN. D.O.T FORM 408/LATEST EDITION, SECTION 601.
4. THE TOP OF GRATE ELEVATION FOR ALL TYPE "C" STORM SEWER INLETS IS FOR THE CENTER OF THE INLET AT THE FACE OF CURB. THE CONTRACTOR IS RESPONSIBLE FOR PROJECTING THE ROADWAY GRADE ALONG THE LENGTH OF THE INLET. THE TOP OF GRATE ELEVATION FOR ALL TYPE "M" STORM SEWER INLETS IS FOR THE CENTER/MIDDLE OF THE INLET.
5. ALL CONSTRUCTION SHALL CONFORM TO SCHWENKSVILLE BOROUGH, THE SCHWENKSVILLE BOROUGH AUTHORITY, AND/OR PECO ENERGY SPECIFICATIONS AND STANDARDS, WHICHEVER IS GREATER. INTERPRETATION SHALL REST WITH THE BOROUGH ENGINEER, OR HIS REPRESENTATIVE IN THE FIELD.
6. ALL SANITARY SEWER MATERIALS AND CONSTRUCTION SHALL BE IN CONFORMANCE WITH THE STANDARDS AND SPECIFICATIONS OF THE SCHWENKSVILLE BOROUGH AUTHORITY. GRAVITY SANITARY SEWER SERVICE WILL BE PROVIDED TO THE BASEMENT ELEVATION OF THE BUILDING. ALL SANITARY SEWER MAINS SHALL BE 8 INCH (DIA.) SDR 26 PVC PIPE, OR EPOXY LINED DUCTILE IRON PIPE FOR MAINS INSTALLED AT A DEPTH OF GREATER THAN FIFTEEN FEET. ALL LATERALS SHALL BE 6 INCH (DIA.) SDR 26 PVC PIPE OR EPOXY LINED DUCTILE IRON PIPE AS SHOWN ON THE PLANS. SANITARY SEWER LATERALS SHALL BE LAID ON A SLOPE OF NOT LESS THAN 1%.
7. THE PROPOSED SANITARY SEWER MAIN CONNECTION TO THE EXISTING SYSTEM SHALL BE VIA INSTALLATION OF A STANDARD MANHOLE. EXISTING MAIN SHALL BE CONNECTED TO THE NEW MANHOLE WITH SDR 26 PVC STUBS AND SOLID SLEEVE TYPE REPAIR COUPLINGS.
8. ALL WATER FACILITIES MATERIALS AND CONSTRUCTION SHALL BE IN CONFORMANCE WITH THE STANDARDS AND SPECIFICATIONS OF THE SCHWENKSVILLE BOROUGH AUTHORITY. ALL WATER MAINS SHALL BE PRESSURE CLASS 350 PIPE. A VALVE AND VALVE BOX SHALL BE INSTALLED OUTSIDE OF THE BUILDING. MEGA-LUG JOINT RESTRAINTS SHALL BE INSTALLED ON VALVES, FIRE HYDRANTS, BENDS, AND JOINTS WITHIN 30 FEET OF CHANGES IN ALIGNMENT. FITTINGS AND PIPE TO BE RESTRAINED WITH MEGA-LUGS REQUIRE MECHANICAL JOINTS.
9. ALL WATER MAINS AND SANITARY SEWER LINES SHALL HAVE A MINIMUM OF FOUR (4) FEET OF COVER. NO OTHER UNDERGROUND UTILITIES, INCLUDING BUT NOT LIMITED TO ELECTRIC, TELEPHONE, CABLE, GAS OR STREET LIGHTS, SHOULD BE INSTALLED WITHIN FIVE FEET (HORIZONTAL DISTANCE) OF THE WATER MAIN.
10. A HORIZONTAL SEPARATION OF 10 FEET AND/OR A VERTICAL CLEARANCE OF 18 INCHES SHALL BE MAINTAINED BETWEEN THE SANITARY SEWER AND ANY OTHER UTILITY PIPELINES. WHERE PIPELINES MUST CROSS UNDER A SEWER, THE INSTALLATION MUST ALSO PROVIDE ADEQUATE STRUCTURAL SUPPORT FOR THE SEWER TO PREVENT DEFLECTION AND BREAKING OF THE SEWER. WHERE PROPER CLEARANCES CAN NOT BE PROVIDED, CONCRETE PIER SUPPORTS SHALL BE INSTALLED ON EITHER SIDE OF THE SEWER PIPE AT THE CONFLICT.
11. NO PLANTINGS, STRUCTURES, OR LIGHT POLES SHALL BE LOCATED WITHIN SANITARY SEWER, WATER, OR STORM SEWER EASEMENTS. NO PLANTINGS OR STRUCTURES SHALL BE LOCATED WITHIN 10 FEET OF THE SANITARY SEWERS OR LATERALS AND WATER MAINS OR SERVICES.
12. ROOF DRAINS SHALL BE OUTLETTED INTO STORM INLETS ASSOCIATED WITH UNDERGROUND STORMWATER BMPs AS SHOWN.
13. ALL SURFACE AREAS SHALL BE PROPERLY GRADED TO ENSURE PROPER DRAINAGE FLOW, AWAY FROM BUILDINGS TO NEAREST INLET OR WATERCOURSE WITHOUT PONDING OR OBSTRUCTION. A MINIMUM OF 2% SLOPE SHALL BE PROVIDED ON ALL GRASSED AREAS EXCEPT BASIN BOTTOMS AND OTHER BMPS, WHICH ARE DESIGNED TO BE FLAT BMP AREAS.
14. ANY SPRING ENCOUNTERED DURING ROADWAY CONSTRUCTION SHALL BE OUTLETTED BY U-DRAIN TO NEAREST STORM SEWER FACILITY OR WATERCOURSE. U-DRAIN PLACEMENT TO BE BY THE DIRECTION OF THE BOROUGH ENGINEER.
15. UNDER-DRAINS WITHIN DRAINAGE SWALES AND STORMWATER BMPS SHALL BE 4"Ø PERFORATED H.D.P.E. PIPE (OR APPROVED EQUAL) SURROUNDED BY MIN. 6" OF CRUSHED STONE.
16. DWELLING FOUNDATIONS SHOULD BE WATERPROOFED TO PREVENT POTENTIAL WATER PROBLEMS CAUSED BY RUNOFF THAT IS MANAGED WITHIN THE SUBSURFACE STORMWATER MANAGEMENT FACILITIES.
17. NO TOPSOIL SHALL BE REMOVED FROM THE SITE OR USED AS SPOIL. TOPSOIL MUST BE REMOVED FROM THE AREAS OF CONSTRUCTION AND STORED SEPARATELY. UPON COMPLETION OF THE CONSTRUCTION, THE TOPSOIL MUST BE REDISTRIBUTED ON THE SITE UNIFORMLY. ALL AREAS OF THE SITE SHALL BE STABILIZED BY SEEDING OR PLANTING ON SLOPES OF LESS THAN 10% AND SHALL BE STABILIZED BY SODDING ON SLOPES 10% OR MORE AND PLANTED IN GROUND COVER ON SLOPES 20% OR MORE.
18. MAIL DELIVERY FOR ALL UNITS TO BE VIA CLUSTER BOX UNIT (CBU) AND OUTDOOR PARCEL LOCKER MEETING THE SPECIFICATIONS AND STANDARDS OF THE U.S.P.S. (PUBLICATION 265-A, OCT. 2013). SALSBURY INDUSTRIES MODELS #3316 CBU AND #3302 LOCKER, OR APPROVED EQUALS. COLOR AND APPURTENANCES TO BE SELECTED BY OWNER.
19. TWO (2) ANCHORED BENCHES WITH SAFETY SURFACES ARE PROPOSED ON EITHER SIDE OF EACH BUILDING ENTRANCE. BENCHES MANUFACTURED BY COLUMBIA CASCADE, MODEL NUMBER 2118-6 (TIMBERFORM RESTORATION) OR EQUAL (SEE DETAIL).
20. A PRE-CONSTRUCTION MEETING WITH THE REPRESENTATIVES OF THE SCHWENKSVILLE BOROUGH AUTHORITY'S ENGINEER IS MANDATORY BEFORE THE START OF CONSTRUCTION. A TAPPING FEE AGREEMENT MUST ALSO BE EXECUTED WITH THE SCHWENKSVILLE BOROUGH AUTHORITY BEFORE CONSTRUCTION. AFTER CONSTRUCTION, IT IS THE RESPONSIBILITY OF THE DEVELOPER TO SUPPLY RECORD DRAWINGS TO THE SCHWENKSVILLE BOROUGH AUTHORITY'S ENGINEER FOR REVIEW AND APPROVAL.
21. ALL ROOF GUTTERS SHALL BE EQUIPPED WITH DEBRIS SCREENING. UTILIZE METAL OR PLASTIC MESH CAPABLE OF PREVENTING LEAVES, BRANCHES, AND TRASH FROM ENTERING THE ROOF DRAIN SYSTEM DISCHARGING INTO THE UNDERGROUND STORMWATER FACILITY.

UNDERGROUND UTILITY NOTE

LOCATIONS OF EXISTING UTILITIES SHOWN HEREON ARE BASED ON INFORMATION RECEIVED FROM FACILITY OWNERS FOLLOWING A CALL TO PA ONE CALL SYSTEM, INC. COMPLETENESS OR ACCURACY OF TYPE, SIZE, DEPTH, OR HORIZONTAL LOCATION OF UTILITIES CANNOT BE GUARANTEED. CONTRACTORS MUST VERIFY THE LOCATION AND DEPTH OF UNDERGROUND UTILITIES BEFORE THE START OF WORK BY NOTIFYING FACILITY OWNERS, THROUGH THE PA ONE CALL SYSTEM (1-800-242-1776 OR 811), NOT LESS THAN 3 BUSINESS DAYS NOR MORE THAN 10 BUSINESS DAYS IN ADVANCE OF BEGINNING EXCAVATION OR DEMOLITION WORK PER THE REQUIREMENTS OF PA ACTS 287 AND 121, AS AMENDED.

DESIGN SERIAL NO.: 20131061391 (04-16-2013)

30 0 15 30 60 90

DRAWING SCALE: 1"=30' V: 1"=3'

THIS DRAWING IS NOT TO BE USED FOR CONSTRUCTION UNLESS STAMPED: "ISSUED FOR CONSTRUCTION"

No.	REVISION	DATE
11	REVISED PER BOROUGH EMAIL COMMENTS (10/09/18)	OCTOBER 24, 2018
10	REVISED PER BOROUGH EMAIL COMMENTS (07/06/18) & 07/09/18)	AUGUST 16, 2018
9	REVISED PER BOROUGH LTR. (12/20/17), SEWER AUTH. LTR. (01/31/18)	JUNE 5, 2018
8	REVISED PER MCCD TECHNICAL REVIEW (03/12/18)	MAY 4, 2018
7	REVISED PER MCCD ADMINISTRATIVE INCOMPLETENESS REVIEW (01/09/18)	JANUARY 16, 2018
	(SEE COVER SHEET FOR COMPLETE LIST OF PLAN REVISION)	
	PLAN ORIGINATION DATE	JUNE 24, 2016

PLAN AND PROFILE
PROPOSED DRIVE

AS PART OF

CENTENNIAL APARTMENTS

PREPARED FOR

HOFF PROPERTIES, LLC

SITE SITUATE IN

SCHWENKSVILLE BOROUGH, MONTGOMERY COUNTY, PA

RICHARD C. MAST ASSOCIATES, P.C.
RCMA

Richard C. Mast Associates, P.C.
Consulting Engineers and Surveyors
www.rcmaonline.com

The Village at Lederach
658 Harleysville Pike, Suite 150
Harleysville, PA 19438
(215) 513-2100

DRAFTED BY	PROJ. MNGR.	PROJECT NO.	DRAWING NO.
R.A.F.	D.B.C.	2800	8 OF 22

Q:\ProjectAdmin\2800 Series\2800 Hoff - Centennial Street Apartments\6 Project CAD Files\2800 08 PDRIVE

UNDERGROUND UTILITY NOTES:
1. HORIZONTAL AND VERTICAL LOCATIONS OF UNDERGROUND UTILITIES (SHOWN ON THE PLANS) ARE APPROXIMATE AND MUST BE FIELD VERIFIED BY THE CONTRACTOR PRIOR TO CONSTRUCTION.
2. SPECIFICALLY, THE INVERT ELEVATIONS FOR EXISTING MANHOLES #40, 41 & #42 AND PIPE SLOPES MUST BE FIELD VERIFIED BY THE CONTRACTOR PRIOR TO THE PROPOSED MANHOLE CONNECTION.

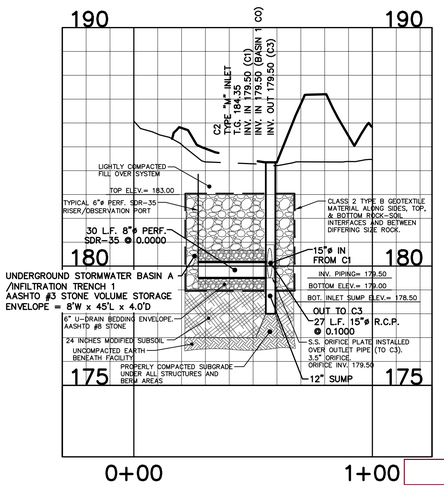

PROFILE OF BASIN A LONGITUDINAL-SECTION

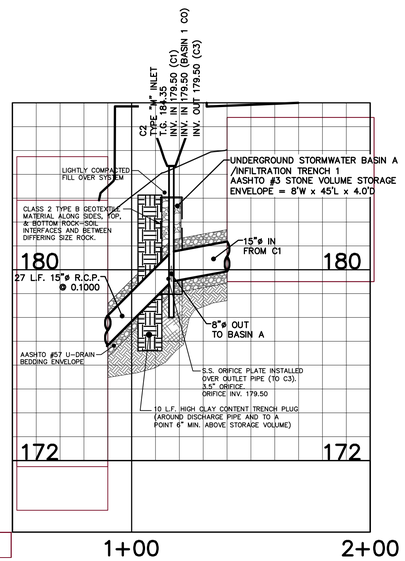

PROFILE OF BASIN A CROSS-SECTION

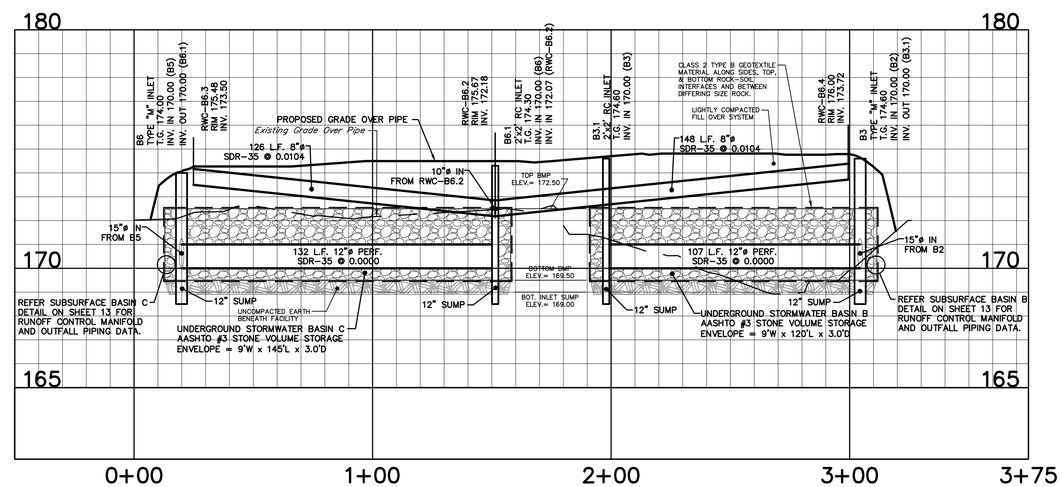

PROFILE OF UNDERGROUND BASINS B AND C

UNDERGROUND UTILITY NOTE

PENNSYLVANIA ONE CALL SYSTEM, INC. 1-800-242-1776 DIAL 8-1-1 WHEN CALL BEFORE YOU DIG!

LOCATIONS OF EXISTING UTILITIES SHOWN HEREON ARE BASED ON INFORMATION RECEIVED FROM FACILITY OWNERS FOLLOWING A CALL TO PA ONE CALL SYSTEM, INC. COMPLETENESS OR ACCURACY OF TYPE, SIZE, DEPTH, OR HORIZONTAL LOCATION OF UTILITIES CANNOT BE GUARANTEED. CONTRACTORS MUST VERIFY THE LOCATION AND DEPTH OF UNDERGROUND UTILITIES BEFORE THE START OF WORK BY NOTIFYING FACILITY OWNERS, THROUGH THE PA ONE CALL SYSTEM (1-800-242-1776 OR 811), NOT LESS THAN 3 BUSINESS DAYS NOR MORE THAN 10 BUSINESS DAYS IN ADVANCE OF BEGINNING EXCAVATION OR DEMOLITION WORK PER THE REQUIREMENTS OF PA ACTS 287 AND 121, AS AMENDED.

DESIGN SERIAL NO.: 20131061391 (04-16-2013)

30 0 15 30 60 90

DRAWING SCALE: 1"=30' V: 1"=3'

THIS DRAWING IS NOT TO BE USED FOR CONSTRUCTION UNLESS STAMPED: "ISSUED FOR CONSTRUCTION"

No.	REVISION	DATE
11	REVISED PER BOROUGH EMAIL COMMENTS (10/09/18)	OCTOBER 24, 2018
10	REVISED PER BOROUGH EMAIL COMMENTS (07/06/18) & 07/09/18)	AUGUST 16, 2018
9	REVISED PER BOROUGH LTR. (12/20/17), SEWER AUTH. LTR. (01/31/18)	JUNE 5, 2018
8	REVISED PER MCCD TECHNICAL REVIEW (03/12/18)	MAY 4, 2018
7	REVISED PER MCCD ADMINISTRATIVE INCOMPLETENESS REVIEW (01/09/18)	JANUARY 16, 2018
	(SEE COVER SHEET FOR COMPLETE LIST OF PLAN REVISION)	
	PLAN ORIGINATION DATE	JUNE 24, 2016

MISCELLANEOUS PROFILES

AS PART OF

CENTENNIAL APARTMENTS

PREPARED FOR

HOFF PROPERTIES, LLC

SITE SITUATE IN

SCHWENKSVILLE BOROUGH, MONTGOMERY COUNTY, PA

RICHARD C. MAST ASSOCIATES, P.C. RCMA

Richard C. Mast Associates, P.C.
Consulting Engineers and Surveyors
www.rcmaonline.com

The Village at Lederach
658 Harleysville Pike, Suite 150
Harleysville, PA 19438
(215) 513-2100

DRAFTED BY	PROJ. MNGR.	PROJECT NO.	DRAWING NO.
R.A.F.	D.B.C.	2800	9 OF 22

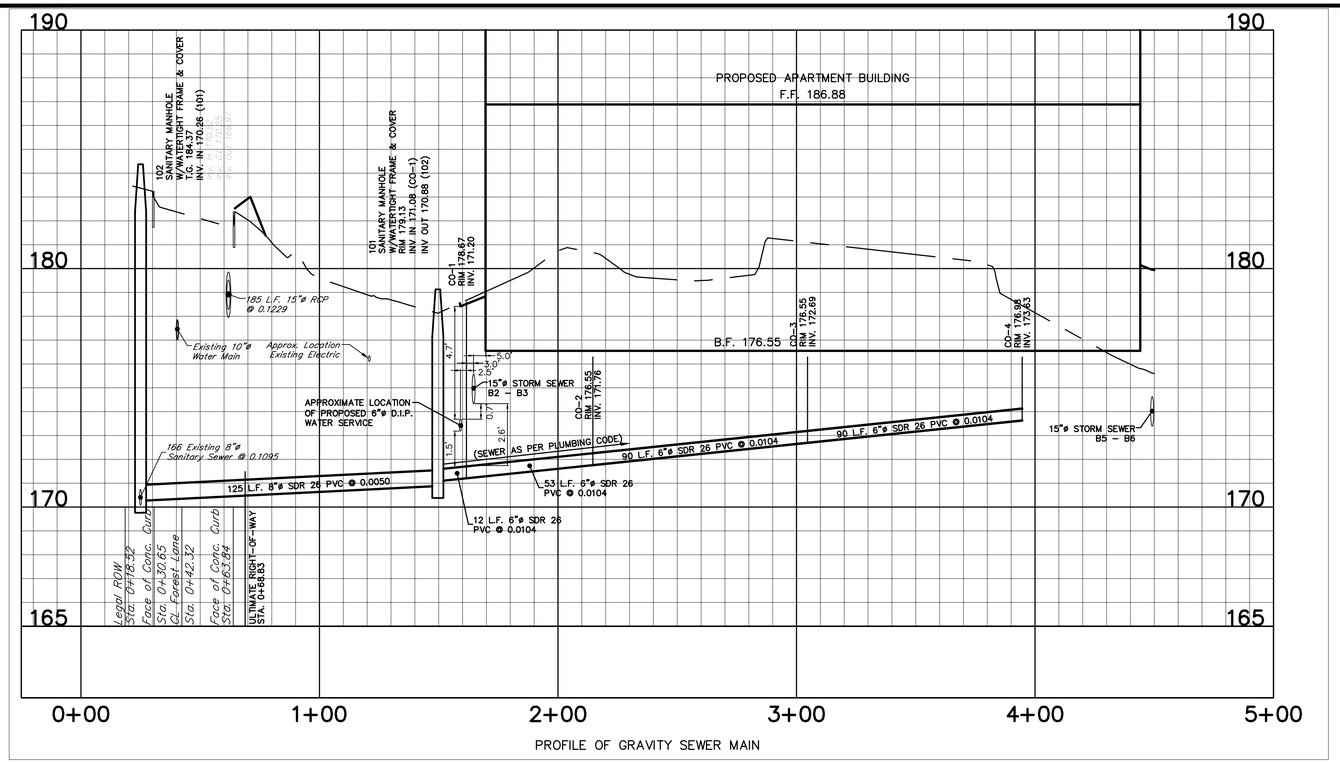

PROFILE OF GRAVITY SEWER MAIN

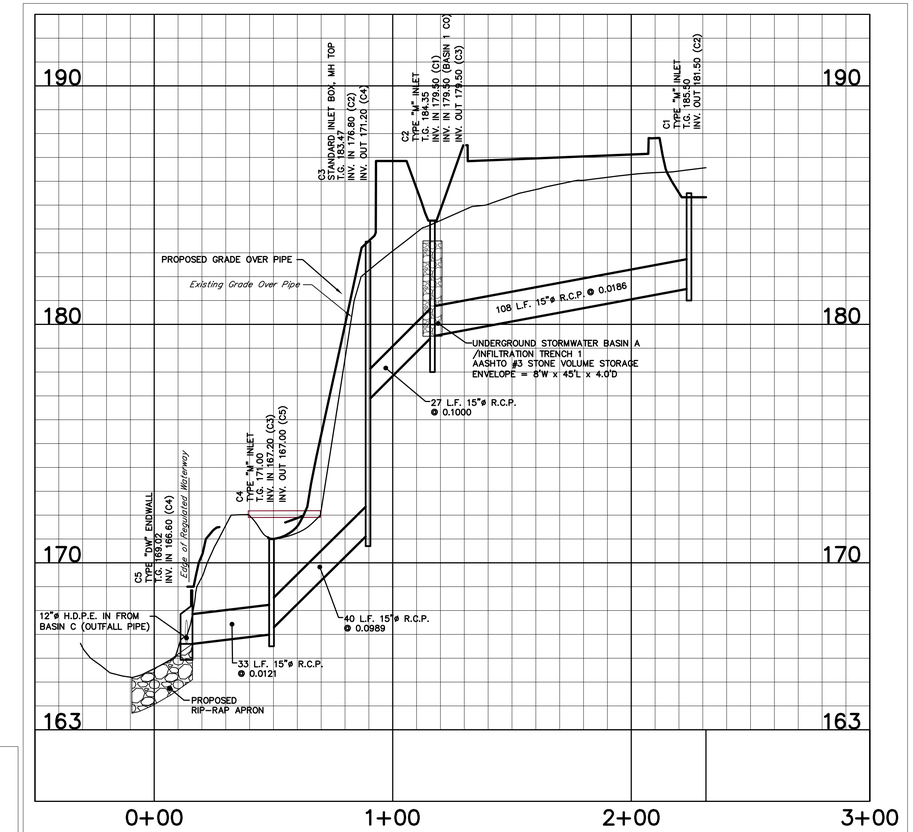

PROFILE OF STORM C1–C5

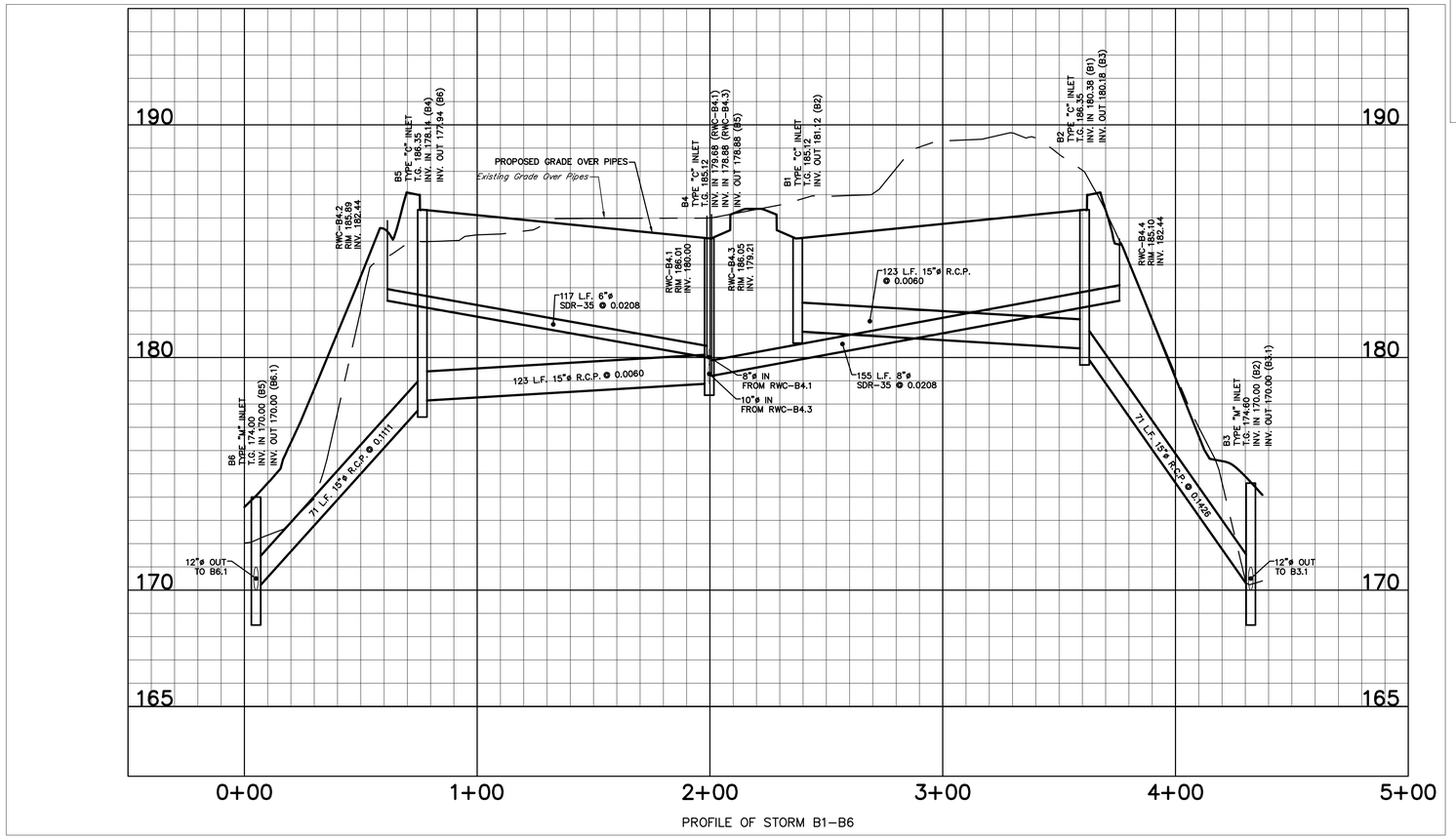

PROFILE OF STORM B1–B6

UNDERGROUND UTILITY NOTES:
1. HORIZONTAL AND VERTICAL LOCATIONS OF UNDERGROUND UTILITIES (SHOWN ON THE PLANS) ARE APPROXIMATE AND MUST BE FIELD VERIFIED BY THE CONTRACTOR PRIOR TO CONSTRUCTION.
2. SPECIFICALLY, THE INVERT ELEVATIONS FOR EXISTING MANHOLES #40, 41 & #42 AND PIPE SLOPES MUST BE FIELD VERIFIED BY THE CONTRACTOR PRIOR TO THE PROPOSED MANHOLE CONNECTION.

UNDERGROUND UTILITY NOTE

PENNSYLVANIA ONE CALL SYSTEM, INC. 1-800-242-1776 DIAL 8-1-1 WHEN DIGGING PENNSYLVANIA ONE CALL SYSTEM, INC. 1-800-242-1776 DIAL 8-1-1 WHEN DIGGING

LOCATIONS OF EXISTING UTILITIES SHOWN HEREON ARE BASED ON INFORMATION RECEIVED FROM FACILITY OWNERS FOLLOWING A CALL TO PA ONE CALL SYSTEM, INC. COMPLETENESS OR ACCURACY OF TYPE, SIZE, DEPTH, OR HORIZONTAL LOCATION OF UTILITIES CANNOT BE GUARANTEED. CONTRACTORS MUST VERIFY THE LOCATION AND DEPTH OF UNDERGROUND UTILITIES BEFORE THE START OF WORK BY NOTIFYING FACILITY OWNERS, THROUGH THE PA ONE CALL SYSTEM (1-800-242-1776 OR 811), NOT LESS THAN 3 BUSINESS DAYS NOR MORE THAN 10 BUSINESS DAYS IN ADVANCE OF BEGINNING EXCAVATION OR DEMOLITION WORK PER THE REQUIREMENTS OF PA ACTS 287 AND 121, AS AMENDED.

DESIGN SERIAL NO.: 201310613 91 (04–16–2013)

30 0 15 30 60 90

DRAWING SCALE: 1"=30' V: 1"=3'

THIS DRAWING IS NOT TO BE USED FOR CONSTRUCTION UNLESS STAMPED: "ISSUED FOR CONSTRUCTION"

No.	REVISION	DATE
11	REVISED PER BOROUGH EMAIL COMMENTS (10/09/18)	OCTOBER 24, 2018
10	REVISED PER BOROUGH EMAIL COMMENTS (07/06/18) & 07/09/18)	AUGUST 16, 2018
9	REVISED PER BOROUGH LTR. (12/20/17), SEWER AUTH. LTR. (01/31/18)	JUNE 5, 2018
8	REVISED PER MCCD TECHNICAL REVIEW (03/12/18)	MAY 4, 2018
7	REVISED PER MCCD ADMINISTRATIVE INCOMPLETENESS REVIEW (01/09/18)	JANUARY 16, 2018
	(SEE COVER SHEET FOR COMPLETE LIST OF PLAN REVISION)	
	PLAN ORIGINATION DATE	JUNE 24, 2016

MISCELLANEOUS PROFILES

AS PART OF

CENTENNIAL APARTMENTS

PREPARED FOR

HOFF PROPERTIES, LLC

SITE SITUATE IN

SCHWENKSVILLE BOROUGH, MONTGOMERY COUNTY, PA

RICHARD C. MAST ASSOCIATES, P.C. RCMA

Richard C. Mast Associates, P.C.
Consulting Engineers and Surveyors
www.rcmaonline.com

The Village at Lederach
658 Harleysville Pike, Suite 150
Harleysville, PA 19438
(215) 513-2100

DRAFTED BY	PROJ. MNGR.	PROJECT NO.	DRAWING NO.
R.A.F.	D.B.C.	2800	10 OF 22

Q:\ProjectAdmin\2800 Series\2800 Hoff – Centennial Street Apartments\6 Project CAD Files\2800 09 PMISC

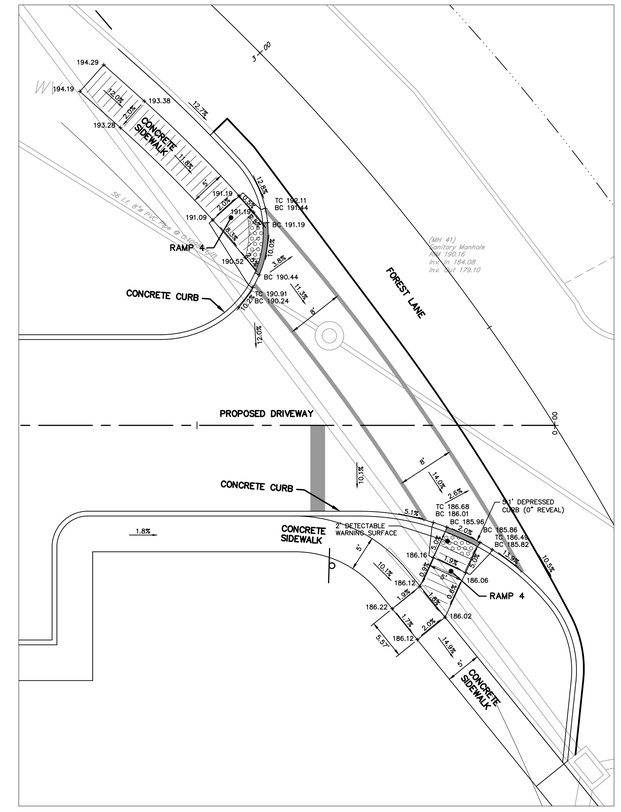

ENTRANCE CURB RAMPS DETAIL (FOREST LANE)

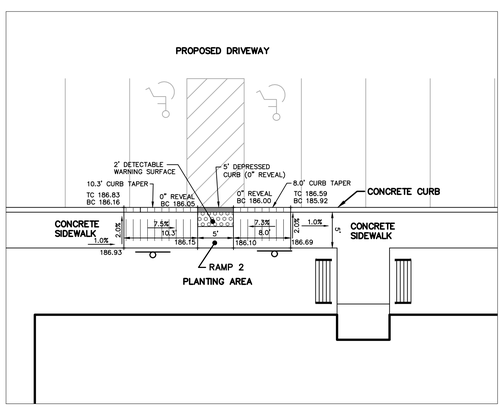

INTERNAL CURB RAMP DETAIL (STA.: 3+50 LT.)

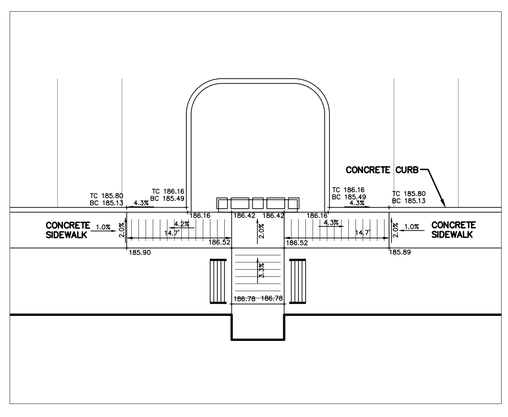

INTERNAL CURB RAMP DETAIL (STA.: 2+39 LT.)

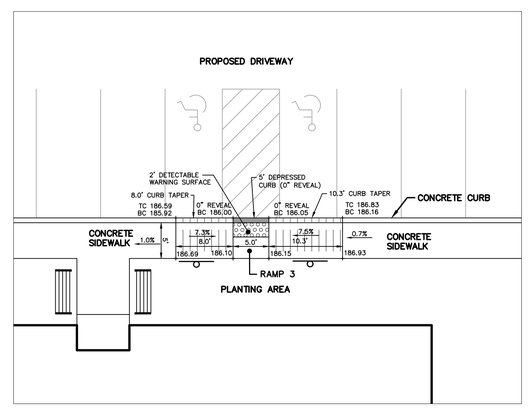

INTERNAL CURB RAMP DETAIL (STA.: 1+27 LT.)

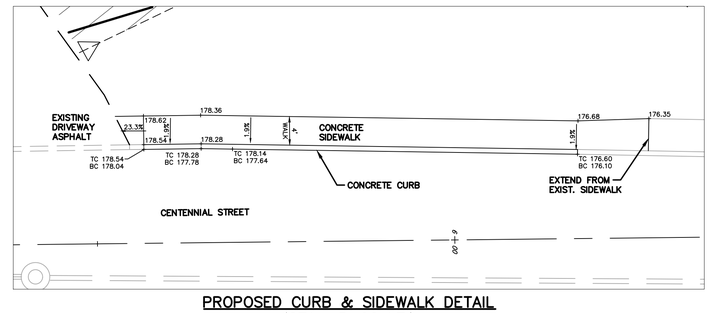

PROPOSED CURB & SIDEWALK DETAIL (STA.: 5+62 LT.)

DRAWING SCALE: 1"=10 '

THIS DRAWING IS NOT TO BE USED FOR CONSTRUCTION UNLESS STAMPED: "ISSUED FOR CONSTRUCTION"

No.	REVISION	DATE
11	REVISED PER BOROUGH EMAIL COMMENTS (10/09/18)	OCTOBER 24, 2018
10	REVISED PER BOROUGH EMAIL COMMENTS (07/06/18) & 07/09/18)	AUGUST 16, 2018
9	REVISED PER BOROUGH LTR. (12/20/17), SEWER AUTH. LTR. (01/31/18)	JUNE 5, 2018
8	REVISED PER MCCD TECHNICAL REVIEW (03/12/18)	MAY 4, 2018
7	REVISED PER MCCD ADMINISTRATIVE INCOMPLETENESS REVIEW (01/09/18)	JANUARY 16, 2018
	(SEE COVER SHEET FOR COMPLETE LIST OF PLAN REVISION)	
	PLAN ORIGINATION DATE	JUNE 24, 2016

HANDICAP RAMP DETAILS

AS PART OF

CENTENNIAL APARTMENTS

PREPARED FOR

HOFF PROPERTIES, LLC

SITE SITUATE IN

SCHWENKSVILLE BOROUGH, MONTGOMERY COUNTY, PA

RICHARD C. MAST ASSOCIATES, P.C. RCMA

Richard C. Mast Associates, P.C.
Consulting Engineers and Surveyors
www.rcmaonline.com

The Village at Lederach
658 Harleysville Pike, Suite 150
Harleysville, PA 19438
(215) 513-2100

DRAFTED BY	PROJ. MNGR.	PROJECT NO.	DRAWING NO.
R.A.F.	D.B.C.	2800	11 OF 22

Q:\ProjectAdmin\2800 Series\2800 Hoff - Centennial Street Apartments\6 Project CAD Files\2800 11 RAMP

PCSM PLANT LEGEND

RIPARIAN TREES

- AMELANCHIER LAEVIS
- BETULA NIGRA
- NYSSA SYLVATICA
- QUERCUS BICOLOR
- SALIX NIGRA
- TAXODIUM DISTICHUM
- 20" D — EXISTING SURVEYED TREE (GREATER THAN 6" DBH)

RIPARIAN SHRUBS

- ILEX VERTICILLATA 'JIM DANDY'
- ILEX VERTICILLATA 'RED SPRITE'

SHADE / CANOPY TREES

- QUERCUS BICOLOR
- NYSSA SYLVATICA
- QUERCUS PHELLOS
- QUERCUS RUBRA

SHRUBS

- ARONIA ARBUTIFOLIA 'BRILLIANTISSIMA'
- CORNUS SERICEA 'CARDINAL'
- HAMAMELIS VIRGINIANA
- ILEX GLABRA 'SHAMROCK'
- ILEX VERTICILLATA 'JIM DANDY'
- ILEX VERTICILLATA 'RED SPRITE'

EVERGREEN TREES

- JUNIPERUS VIRGINIANA
- PINUS STROBUS

ORNAMENTAL TREES

- AMELANCHIER CANADENSIS
- CERCIS CANADENSIS

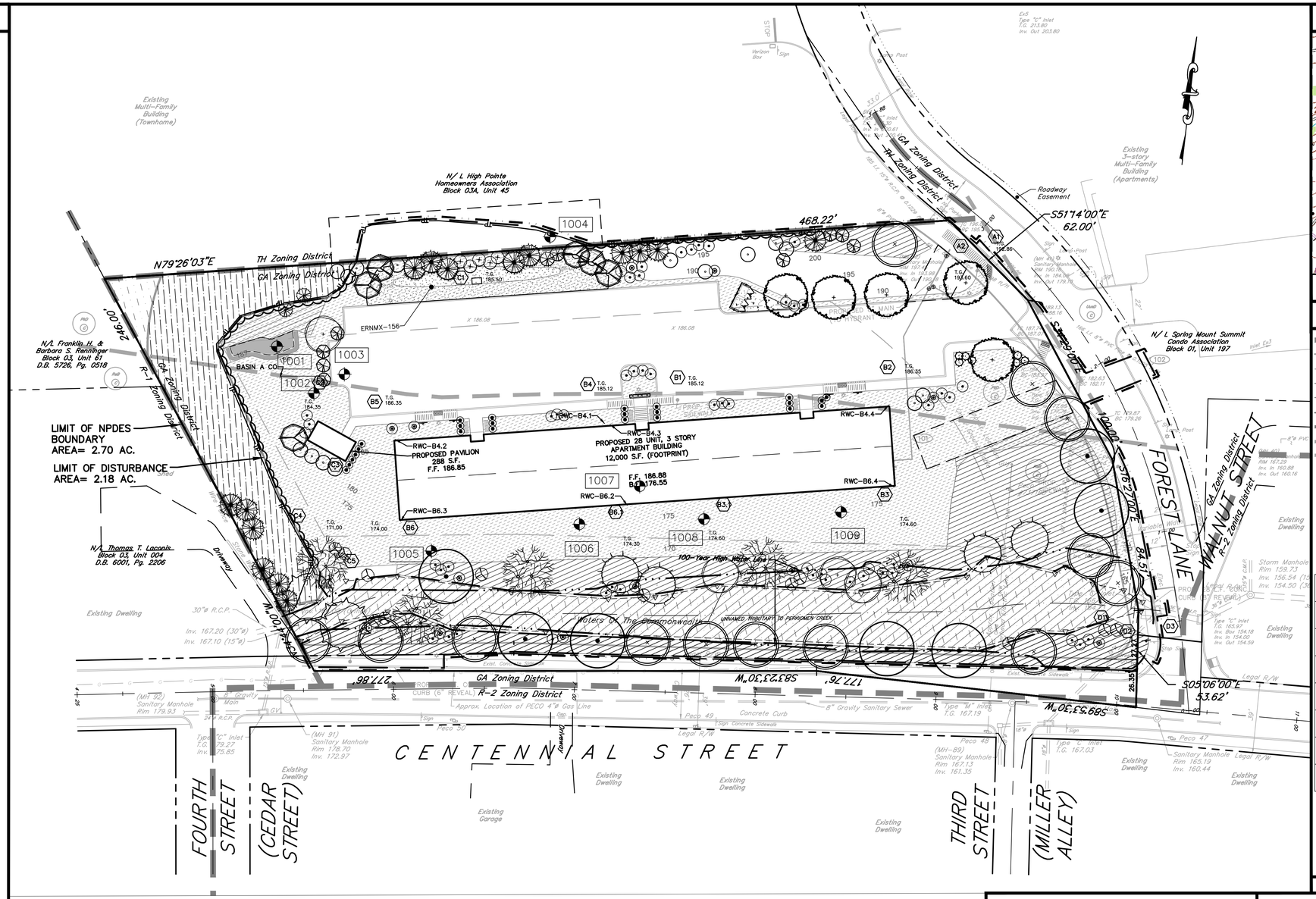

SITE LOCATION MAP

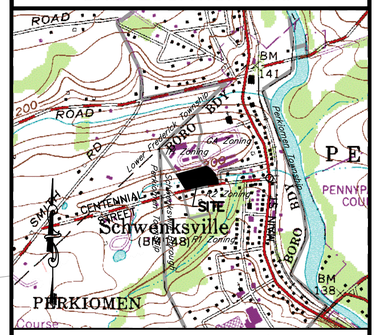

U.S.G.S. PERKIOMENVILLE QUADRANGLE 7.5' SERIES
SCALE: 1"=1000'

PCSM LEGEND

- ZONING
- PROPERTY BOUNDARY
- EXIST. CONTOUR
- EXIST. INDEX CONTOUR
- PROP. CONTOUR
- PROP. INDEX CONTOUR
- EXIST. DRAINAGE SHED
- PROP. MAJOR DRAINAGE SHED
- PROP. MINOR DRAINAGE SHED
- CfA (C) — INDICATES SOILS TYPE LABEL
- INDICATES SOILS BOUNDARY
- PROP. LIMIT OF DISTURBANCE LINE
- PROP. NPDES BOUNDARY LINE
- 1005 — INDICATES INFILTRATION TEST PIT
- INDICATES INLET QUALITY FILTER

BMPs 5.4.1 & 5.6.1 MIN. DISTURBANCE / REDUCED GRADING	
BMP 5.6.2 MINIMIZE SOIL COMPACTION (LAWN)	
BMP 5.6.2 MINIMIZE SOIL COMPACTION (MEADOW)	
BMP 5.6.3 PROTECT EXISTING TREES	
BMP 6.7.3 SOIL AMENDMENT	
BMP 6.4.4 INFILTRATION TRENCH	
BMP 6.4.5 BIORETENTION / RAIN GARDEN	
BMP 6.4.10 INFILTRATION BERM / RETENTIVE GRADING	

INFILTRATION TEST PITS

TEST PIT	DEPTH OF TESTING	ELEV. OF TESTING	INFILTRATION RATE
TEST PIT # 1001	12 INCHES	185.4	1.45 IN/HR
TEST PIT # 1002	48 INCHES	180.4	36.00 IN/HR
TEST PIT # 1003	9 INCHES	184.5	0.00 IN/HR
TEST PIT # 1004	SURFACE	188.0	13.43 IN/HR
TEST PIT # 1005	18 INCHES	170.5	0.00 IN/HR
TEST PIT # 1006	12 INCHES	172.0	1.07 IN/HR
TEST PIT # 1007	60 INCHES	173.4	0.37 IN/HR
TEST PIT # 1008	24 INCHES	169.4	0.25 IN/HR
TEST PIT # 1009	24 INCHES	167.9	0.01 IN/HR

NOTE:
ALL TEST WERE COMPLETED WITH DOUBLE RING INFILTROMETER. THE ABOVE TEST RESULTS DO NOT INCLUDE ANY DESIGN SAFETY FACTORS.

SOILS DATA

SOILS DATA WAS OBTAINED FROM A SOIL SURVEY OF MONTGOMERY COUNTY, PENNSYLVANIA, BY THE NATURAL RESOURCES CONSERVATION SERVICE, THROUGH THE WEB SOIL SURVEY DATABASE.

PkD PENN-KLINESVILLE CHANNERY SILT LOAMS, 15 TO 25 PERCENT SLOPES, WELL DRAINED, MODERATELY RAPID PERMEABILITY, RAPID RUNOFF CHARACTERISTICS, LOW AVAILABLE WATER CAPACITY, SEVERE EROSION HAZARD.
RESTRICTIONS – POORLY SUITED–SLOPE AND DEPTH TO BEDROCK.

ReB READINGTON SILT LOAM, 3 TO 8 PERCENT SLOPES
RESTRICTIONS – FROST ACTION, DEPTH TO SATURATED ZONE, CUTBANKS CAVE DEPTH TO HARD BEDROCK.

BMP PLANTING SCHEDULE

SYM.	QTY.	BOTANICAL NAME	COMMON NAME
SHADE / CANOPY TREES			
NS	1	NYSSA SYLVATICA	BLACK GUM
QB	6	QUERCUS BICOLOR	SWAMP WHITE OAK
QP	13	QUERCUS PHELLOS	WILLOW OAK
QR	5	QUERCUS RUBRA	NORTHERN RED OAK
EVERGREEN TREES			
JV	4	JUNIPERUS VIRGINIANA	EASTERN REDCEDAR
PS	15	PINUS STROBUS	WHITE PINE
ORNAMENTAL TREES			
AC	8	AMELANCHIER CANADENSIS	SERVICEBERRY
CC	6	CERCIS CANADENSIS	REDBUD
SHRUBS AND GROUNDCOVER			
AAB	7	ARONIA ARBUTIFOLIA 'BRILLIANTISMA'	CHOKEBERRY
CS	5	CORNUS SERICEA 'CARDINAL'	CARDINAL REDTWIG DOGWOOD
HV	15	HAMAMELIS VIRGINIANA	COMMON WITCHHAZEL
IG	24	ILEX GLABRA 'SHAMROCK'	SHAMROCK INKBERRY HOLLY
IVE	6	ILEX VERTICILLATA 'JIM DANDY' (MALE)	JIM DANDY COMMON WINTERBERRY
	29	ILEX VERTICILLATA 'RED SPRITE' (FEMALE)	RED SPRITE COMMON WINTERBERRY
CONSERVATION SEEDING			
ERNST CONSERVATION SEEDS DESIGNATION			SEED MIX NAME
ERNMX-156			LOW-GROWING WILDFLOWER & GRASS

PCSM PLANTS SHOWN ONLY. SEE LANDSCAPE PLAN FOR ALL PLANTS AND LEGEND

SYM.	QTY.	BOTANICAL NAME	COMMON NAME
TREES			
AL	13	AMELANCHIER LAEVIS	ALLEGHENY SERVICEBERRY
BN	5	BETULA NIGRA	RIVER BIRCH
NS	3	NYSSA SYLVATICA	BLACK GUM
QB	1	QUERCUS BICOLOR	SWAMP WHITE OAK
SN	5	SALIX NIGRA	BLACK WILLOW
TD	2	TAXODIUM DISTICHUM	BALD CYPRESS
SHRUBS			
IVE	7	ILEX VERTICILLATA 'JIM DANDY' (MALE)	JIM DANDY COMMON WINTERBERRY
	23	ILEX VERTICILLATA 'RED SPRITE' (FEMALE)	RED SPRITE COMMON WINTERBERRY

REFERENCE NOTE

REFER TO THE PCSM NOTES & DETAILS PLAN FOR:
- COMPLETE P.C.S.M. NOTES
- PCSM BMP DETAILS
- BMP INSTALLATION STAGING

MAINTENANCE CERTIFICATION

THE DETENTION BASINS AND STORMWATER BEST MANAGEMENT PRACTICE FACILITIES (B.M.P.'S) AS SHOWN IN THIS PLAN ARE A BASIC AND PERPETUAL PART OF THE STORM DRAINAGE SYSTEM OF SCHWENKSVILLE BOROUGH, AND AS SUCH, ARE TO BE PROTECTED AND PRESERVED IN ACCORDANCE WITH THE APPROVED FINAL PLAN BY THE PROPERTY OWNER. SCHWENKSVILLE BOROUGH AND/OR ITS AGENTS RESERVES THE RIGHT AND PRIVILEGE TO ENTER UPON SUCH LANDS FROM TIME TO TIME FOR THE PURPOSE OF INSPECTION OF SAID STORMWATER BMP'S IN ORDER TO DETERMINE THAT THE STRUCTURAL AND DESIGN INTEGRITY ARE BEING MAINTAINED BY THE OWNER. IN THE EVENT THAT MAINTENANCE AND STRUCTURAL INTEGRITY ARE NOT MAINTAINED BY THE OWNER AS REQUIRED BY THE BOROUGH AND THE APPROVED PLAN, THE OWNER HEREBY GRANTS TO THE BOROUGH THE RIGHT TO ENTER UPON SUCH PROPERTY AND TO PERFORM ANY AND ALL IMPROVEMENTS, REVISIONS OR MAINTENANCE AS MAY BE DETERMINED NECESSARY BY THE BOROUGH AND TO RECOVER THE COSTS THEREOF FROM THE OWNER BY ALL LAWFUL MEANS INCLUDING, BUT NOT LIMITED TO, THE IMPOSITION OF A MUNICIPAL LIEN ON THE SUBJECT PROPERTY. THE OWNER SHALL NOT PLACE ANY STRUCTURES OR ALTER THE GRADING SO AS TO COMPROMISE THE DESIGNED OPERATION OF THE BMP'S.

_____ _____ _____ _____

DAVID N. LEH, P.E., ON THIS DATE _____, HAS REVIEWED AND HEREBY CERTIFIES THAT THE SWM SITE PLAN MEETS ALL DESIGN STANDARDS AND CRITERIA OF THE MUNICIPAL ORDINANCE NO. CHAPTER 140 STORMWATER MANAGEMENT.

_____
DAVID N. LEH, P.E., BOROUGH ENGINEER

PCSM PLAN – 1 OF 3

30 0 15 30 60 90
DRAWING SCALE: 1"=30'

THIS DRAWING IS NOT TO BE USED FOR CONSTRUCTION UNLESS STAMPED: "ISSUED FOR CONSTRUCTION"

No.	REVISION	DATE
11	REVISED PER BOROUGH EMAIL COMMENTS (10/09/18)	OCTOBER 24, 2018
10	REVISED PER BOROUGH EMAIL COMMENTS (07/06/18) & 07/09/18)	AUGUST 16, 2018
9	REVISED PER BOROUGH LTR. (12/20/17), SEWER AUTH. LTR. (01/31/18)	JUNE 5, 2018
8	REVISED PER MCCD TECHNICAL REVIEW (03/12/18)	MAY 4, 2018
7	REVISED PER MCCD ADMINISTRATIVE INCOMPLETENESS REVIEW (01/09/18)	JANUARY 16, 2018
	(SEE COVER SHEET FOR COMPLETE LIST OF PLAN REVISION)	
	PLAN ORIGINATION DATE	JUNE 24, 2016

POST–CONSTRUCTION STORMWATER MANAGEMENT PLAN

AS PART OF

CENTENNIAL APARTMENTS

PREPARED FOR

HOFF PROPERTIES, LLC

SITE SITUATE IN

SCHWENKSVILLE BOROUGH, MONTGOMERY COUNTY, PA

RICHARD C. MAST ASSOCIATES, P.A.
The Village at Lederach
658 Harleysville Pike, Suite 150
Harleysville, PA 19438
(215) 513-2100

Richard C. Mast Associates, P.C.
Consulting Engineers and Surveyors
www.rcmaonline.com

DRAFTED BY	PROJ. MNGR.	PROJECT NO.	DRAWING NO.
R.A.F.	D.B.C.	2800	12 OF 22

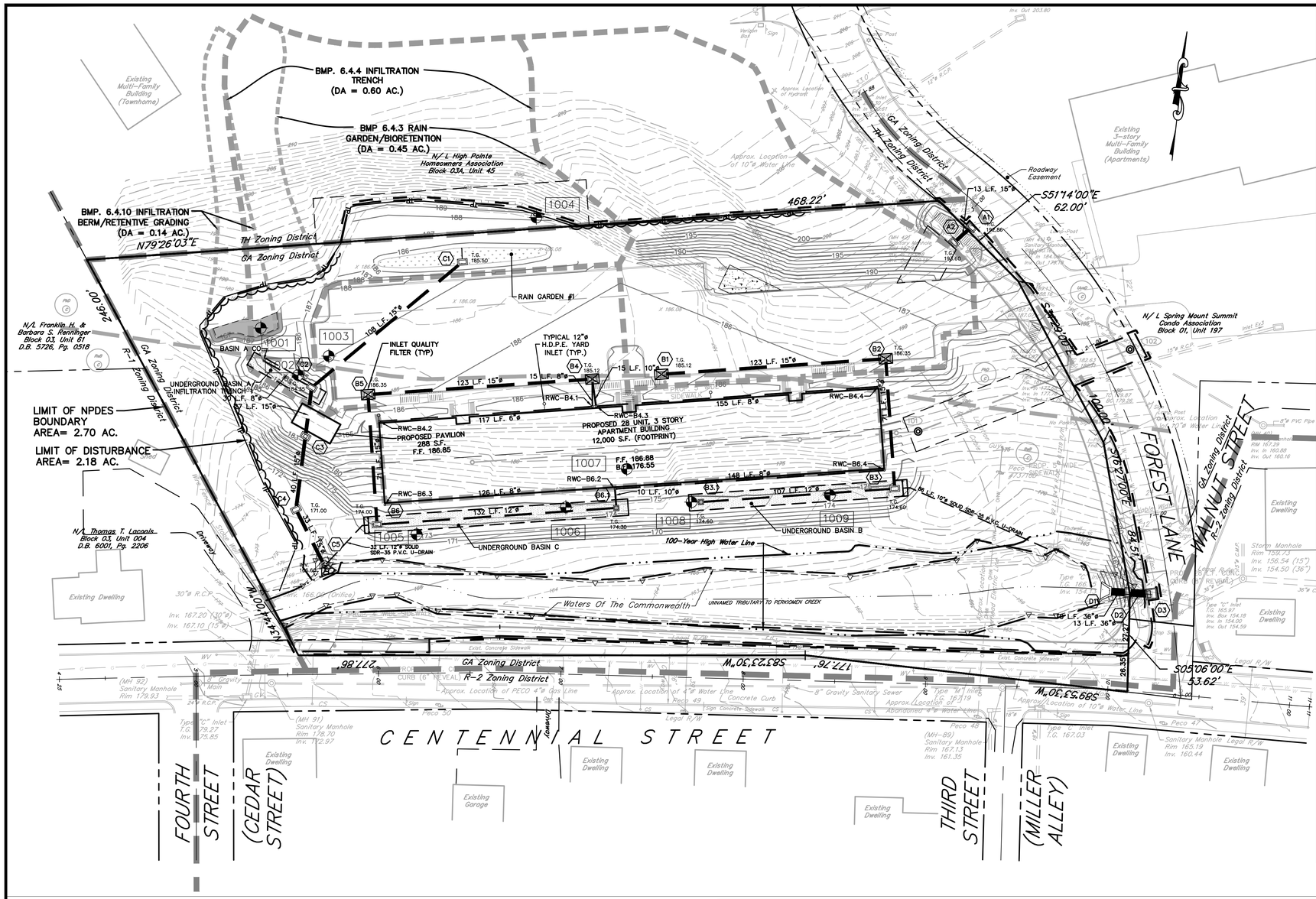

EARTHMOVING/BMP CONSTR. SEQUENCE

In order to keep erosion and sediment pollution during construction to an absolute minimum, the following procedures and stages shall be followed:

1. Sed. Trap #1 must remain, at a minimum, until all bulk grading and excavating is completed, the proposed building foundation is constructed, proposed storm run B1-B2 and temporary discharge pipe, proposed storm run B4-B5 and temporary discharge pipe, and, to the greatest extent possible, the proposed access drive/parking area.
2. INSTALL INITIAL E&S CONTROLS:
   - 2.1. (CRITICAL STAGE Contact licensed Professional) Install location markers for limit of disturbance, tree protection fencing, safety fencing (infiltration areas & berm), and filter barriers.
   - 2.2. Contractor to install, or cause to have installed, location markers for existing underground utilities crossing through the project site, including, but not limited to underground electric, water, sewer, and gas lines.
   - 2.3. Demo existing curb and install stone construction entrance from Forest Lane.
   - 2.4. Install filter socks FS-1, FS-2, & FS-3, tree protection fencing, water bar at construction entrance, and safety fence barrier around the proposed infiltration areas and berm.
   - 2.5. Install a Concrete Washout Station (see Figure 3.18).
3. PERFORM ALL NECESSARY FOUNDATION DEMOLITION, TREE/BRUSH CLEARING, AND GRUBBING. Clean acceptable fill may be reused onsite as permitted by Schwenksville Borough. Remove debris from the site in accordance with waste disposal regulations.
4. CONSTRUCT STORM C5-C2 AND SEDIMENT TRAP 1
   - 4.1. Strip and stockpile topsoil over proposed storm sewer. Install filter sock FS-4 below stockpile.
   - 4.2. Construct Storm C5-C2 using standard Trench Excavation Methods. Remove and replace Filter Barrier #2 as necessary to construct piping. Restore all disturbed areas immediately with permanent seed and mulch.
   - 4.3. Install inlet filters immediately over all Inlets.
   - 4.4. Infiltration trench & Rain Garden BMPs (at Inlets C2 & C1) to be installed later.
   - 4.5. Strip and stockpile topsoil over trap area.
   - 4.6. Construct trap to temporary design grades including embankment (berm) and emergency spillway at temporary elevations. NOTE: Use caution to prevent compaction of soils over Infiltration Trench 1 BMP).
   - 4.7. Construct trap outfall pipe through berm and install temporary riser, skimmer, skimmer landing, dewatering device, clean-out stake, and spillway lining.
   - 4.8. Stabilize disturbed areas with slope erosion blanket and permanent seed.
5. IMMEDIATELY CONSTRUCT SWALE T1:
   - 5.1. Strip and stockpile topsoil over proposed swale.
   - 5.2. Construct Temp. Swale T1 to design subgrade.
   - 5.3. Stabilize with specified erosion blanket and temporary seed.
   - 5.4. Temp. Swale T1 to remain until the proposed building foundation is constructed, proposed storm run B1-B2 and temporary discharge pipe, proposed storm run B4-B5 and temporary discharge pipe, and, to the greatest extent possible, the proposed access drive/parking area.
6. PERFORM UNDERGROUND ELECTRIC SERVICE RELOCATION. Coordinate with electric service provider and complete existing underground electric line vertical relocation. All materials, construction methods, standards, and specifications as per electric service provider.
7. Bulk site grading and construction of proposed underground utilities and above-ground improvements may be completed concurrently.
8. PERFORM BULK CUTS/FILLS AND ROUGH GRADE PROJECT SITE:
   - 8.1. Strip and stockpile topsoil over project site. After topsoil is stripped and stockpiled, stabilize stockpile with temporary seed and mulch.
   - 8.2. Perform bulk cuts & fills, including rough grade driveway/parking area to design subgrade and excavation of proposed building foundation. Replace construction entrance stone and water bar as necessary during grading activities.
9. BEGIN CONSTRUCTION OF THE PROPOSED BUILDING FOUNDATION.
10. After electric service has been relocated, CONSTRUCT PROPOSED SANITARY SEWER MAIN AND PROPOSED POTABLE WATER MAIN. The locations of any stubs constructed short of the building shall be marked with a visual demarcation.
11. CONSTRUCT FOREST LANE PROPOSED IMPROVEMENTS:
   - 11.1. Widening improvements are to be completed such that areas are excavated to design subgrade and stabilized at the end of each work day with the compacted stone course.
   - 11.2. Sawcut existing edge of paving utilizing proper traffic controls.
   - 11.3. Construct storm A1-A2 and D3-D1.
   - 11.4. See Stream Diversion Sequence for construction of storm run D3-D1.
   - 11.5. Excavate proposed widening to design subgrade and stockpile (or use as fill) excavated materials.
   - 11.6. Finish grade widening and construct curbs.
   - 11.7. Install stone and macadam base courses within areas of widening.
12. CONSTRUCT STORM SEWERS:
   - 12.1. Construct Storm B1-B2 and temporary discharge pipe. Pipe flows to discharge overland into Inlet C4.
   - 12.2. Construct Storm B4-B5 and temporary discharge pipe.
   - 12.3. Construct soil diversion berms around Inlets B1, B2, B4, & B5 as necessary. Berms must prevent disturbed runoff from entering the completed system. Berms to remain until proposed access drive and parking area is constructed/functional and disturbed runoff is properly managed before entering completed inlets.
   - 12.4. Construct Storm B3-B3.1 and Underground Basin B and Storm B6-B6.1 and Underground Basin C as per details. Refer to detail for BMP specific construction staging and notes. Temporarily cover inlet grates to prevent sedimentation from overland flows. Ensure building roof drains are connected to basins as shown.
13. COMPLETE INTERNAL DRIVEWAY (to macadam base course):
   - 13.1. Sediment Trap to remain in place and functional to the greatest extent possible. The dewatering device and pumped filter bag may be used in place of the Sediment Trap on a short term basis to construct the western end of the parking area.
   - 13.2. Finish grade driveway/parking area for curb and sidewalk installation and construct curbs.
   - 13.3. Due to steep grades and limited space, the Stone Tire Cleaner shall remain until all earthwork is completed.
   - 13.4. Excavate collected sediment from trap, remove trap controls.
   - 13.5. Construct Storm C2-C1. Replace/install inlet protection at C1 and C2.
   - 13.6. Properly backfill trap area to parking area design subgrade with acceptable compacted fill.
   - 13.7. Install stone base course and bituminous base courses to parking area and driveway, except Tire Cleaner area.
   - 13.8. Install filter sock FS-5 along top-of-curb below embankment.
   - 13.9. Install inlet filters over all parking area inlets.
14. CONSTRUCT SIDEWALKS, TRASH REFUSE PAD, AND PAVILION. Stabilize disturbed areas.
15. (CRITICAL STAGE Contact licensed Professional) CONSTRUCT INFILTRATION TRENCH A AND INFILTRATION BERM AS PER DETAILS. See BMP specific staging. Stabilize disturbed areas. Install inlet filters immediately.
16. COMPLETE CONSTRUCTION OF ALL PROPOSED IMPROVEMENTS AND UTILITIES. (except Storm C2-C3, Storm C5-C6, and driveway entrance/Tire Cleaner area).
17. (CRITICAL STAGE Contact licensed Professional) APPLY AMENDED TOPSOIL MIXTURE TO ALL DESIGNATED AREAS AS PER DETAIL. Additional depth is recommended to ensure minimum depth is provided at the time of inspection. Stabilize all disturbed areas with permanent seed and mulch. Install slope matting as shown and as per PADEP specifications.
18. An area shall be considered to have achieved final stabilization when it has a minimum uniform 70% (percent) vegetative or other permanent non-vegetative cover with a density sufficient to resist accelerated surface erosion and subsurface characteristics sufficient to resist sliding and other movements.
19. Conservation District approval is required prior to removal of E&S Controls (refer to E&S Notes).
20. After final stabilization is achieved for the drainage area contributing to Underground Basins B & C, REMOVE TEMPORARY DISCHARGE PIPES AND CONSTRUCT STORM C2-C3 AND C5-C6. Replace amended topsoil over disturbed areas, finish grade, and stabilize with permanent seed and mulch. Backfill topsoil stockpile area with excavated material from rain garden.
21. (CRITICAL STAGE Contact licensed Professional) CONSTRUCT RAIN GARDEN AS PER DETAIL. See BMP specific staging. Backfill topsoil stockpile area with excavated material from rain garden. Stabilize disturbed areas. Install inlet filters immediately.
22. REMOVE THE SITE TIRE CLEANER AND COMPLETE DRIVEWAY ENTRANCE CONSTRUCTION TO PAVING BASE COURSE.
23. REMOVE REMAINING TEMPORARY EROSION CONTROL MEASURES AND DISTRIBUTE COLLECTED SEDIMENT TO AREA ADJACENT TO CONTROLS. All areas disturbed during removal of controls must be stabilized immediately.
24. RESTORE AND/OR REPAIR ALL PAVED DRIVEWAY BASE COURSES AS NECESSARY AND RESTORE ALL ITEMS AFFECTED BY CONSTRUCTION ACTIVITIES (I.E. SIGNS, MAILBOXES, ETC.). COMPLETE ALL MUNICIPAL INSPECTION AND PUNCHLIST ITEMS. INSTALL ALL REMAINING BITUMINOUS WEARING COURSES. INSTALL ALL PERMANENT SIGNAGE AND STRIPING. (CRITICAL STAGE Contact licensed Professional) INSTALL ALL REMAINING LANDSCAPING.
25. Upon permanent stabilization of earth disturbance activity under 25 PA. Code § 102.22(A)(2) (relating to permanent stabilization) and installation of BMPs in accordance with the approved plan prepared and implemented in accordance with 25 PA. Code § 102.4 and 102.8, the Permittee and/or Co-permittee shall submit a N.O.T. Notice Of Termination) to the PADEP or authorized Conservation District. The Permittee shall include with the N.O.T. the required record drawings with a final certification statement from a licensed professional.

SITE LOCATION MAP

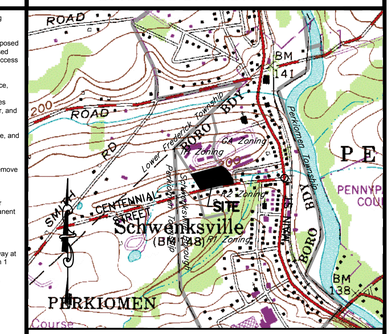

U.S.G.S. PERKIOMENVILLE QUADRANGLE 7.5' SERIES
SCALE: 1"=1000'

PCSM LEGEND

- ZONING
- PROPERTY BOUNDARY
- EXIST. CONTOUR
- EXIST. INDEX CONTOUR
- PROP. CONTOUR
- PROP. INDEX CONTOUR
- EXIST. DRAINAGE SHED
- PROP. MAJOR DRAINAGE SHED
- PROP. MINOR DRAINAGE SHED
- CfA (C) — INDICATES SOILS TYPE LABEL
- INDICATES SOILS BOUNDARY
- PROP. LIMIT OF DISTURBANCE LINE
- PROP. NPDES BOUNDARY LINE
- 1005 — INDICATES INFILTRATION TEST PIT
- INDICATES INLET QUALITY FILTER

BMP 6.4.4 INFILTRATION TRENCH	
BMP 6.4.5 BIORETENTION / RAIN GARDEN	
BMP 6.4.10 INFILTRATION BERM / RETENTIVE GRADING	

PCSM PLAN – 2 OF 3

30 0 15 30 60 90
DRAWING SCALE: 1"= 30 '

INFILTRATION TEST PITS

TEST PIT	DEPTH OF TESTING	ELEV. OF TESTING	INFILTRATION RATE
TEST PIT # 1001	12 INCHES	185.4	1.45 IN/HR
TEST PIT # 1002	48 INCHES	180.4	36.00 IN/HR
TEST PIT # 1003	9 INCHES	184.5	0.00 IN/HR
TEST PIT # 1004	SURFACE	188.0	13.43 IN/HR
TEST PIT # 1005	18 INCHES	170.5	0.00 IN/HR
TEST PIT # 1006	12 INCHES	172.0	1.07 IN/HR
TEST PIT # 1007	60 INCHES	173.4	0.37 IN/HR
TEST PIT # 1008	24 INCHES	169.4	0.25 IN/HR
TEST PIT # 1009	24 INCHES	167.9	0.01 IN/HR

NOTE:
ALL TEST WERE COMPLETED WITH DOUBLE RING INFILTROMETER. THE ABOVE TEST RESULTS DO NOT INCLUDE ANY DESIGN SAFETY FACTORS.

SOILS DATA

SOILS DATA WAS OBTAINED FROM A SOIL SURVEY OF MONTGOMERY COUNTY, PENNSYLVANIA, BY THE NATURAL RESOURCES CONSERVATION SERVICE, THROUGH THE WEB SOIL SURVEY DATABASE.

PkD PENN–KLINESVILLE CHANNERY SILT LOAMS, 15 TO 25 PERCENT SLOPES, WELL DRAINED, MODERATELY RAPID PERMEABILITY, RAPID RUNOFF CHARACTERISTICS, LOW AVAILABLE WATER CAPACITY, SEVERE EROSION HAZARD.
RESTRICTIONS – POORLY SUITED–SLOPE AND DEPTH TO BEDROCK.

ReB READINGTON SILT LOAM, 3 TO 8 PERCENT SLOPES
RESTRICTIONS – FROST ACTION, DEPTH TO SATURATED ZONE, CUTBANKS CAVE DEPTH TO HARD BEDROCK.

BMP STAGING

UNDERGROUND BASIN CONSTRUCTION NOTES:

1. ALL PROPOSED ROUGH LOT GRADING WITHIN THE CONTRIBUTING DRAINAGE AREA FOR SUBSURFACE FACILITY SHOULD BE COMPLETED AND SHOULD BE AT A MINIMUM TEMPORARILY STABILIZED BEFORE EXCAVATION OF THE BMP BOTTOM AND CONSTRUCTION OF THE FACILITY.
2. ALL HOUSE DOWNSPOUTS SHALL BE EQUIPPED WITH DEBRIS SCREENS.
3. VOLUME STORAGE AGGREGATE SHALL BE CLEAN–WASHED AASHTO #3 WITH MINIMUM 40% VOID RATIO.
4. ALL AGGREGATE SURROUNDING PERFORATED P.V.C PIPING SHALL BE CLEAN–WASHED AASHTO #8.
5. THE INVERT OF THE OUTFALL PIPE (DISCHARGE PIPE) SHALL BE INSTALLED AT THE PROPOSED TOP OF VOLUME STORAGE AGGREGATE.
6. THE NON–WOVEN GEOTEXTILE LINING SHALL BE INSTALLED ON ALL SIDES AND TOP OF THE STONE ENVELOPE.
7. ALL HDPE PIPE TO BE SMOOTH BORE ADS N12 (OR APPROVED EQUAL) WITH BELL AND SPIGOT JOINTS.
8. INSTALL OVERFLOW PROTECTION OUTLETS AND SPLASH PADS WHERE EACH DWELLING DOWNSPOUT CONNECTS TO THE UNDERGROUND CONVEYANCE PIPES (AT THE BUILDING WALL).

UNDERGROUND BASIN CONSTRUCTION SEQUENCE:

9. INSTALL NECESSARY TEMPORARY SEDIMENT CONTROL BMPs TO PROTECT INFILTRATION AREA FROM SEDIMENT.
10. EXCAVATED TRENCH TO THE PROPOSED BOTTOM SUB–GRADE ELEVATION AND SCARIFY THE EXISTING SOIL SURFACES. DO NOT COMPACT THE IN–SITU SOILS.
11. UNDERGROUND BASIN A / INFILTRATION TRENCH 1 SEE MODIFIED SUBSOIL CONSTRUCTION SEQUENCE (STEPS 16–21).
12. PLACE FILTER FABRIC ON ALL SIDES OF TRENCH. BACKFILL WITH SPECIFIED AGGREGATE TO PROPOSED TOP–OF–STONE ELEVATION.
13. CONSTRUCT U–DRAIN DISTRIBUTION PIPE AND INLET/RISER PIPES CONCURRENTLY WITH STONE BACKFILL OPERATIONS. INSTALL OVERFLOW SPLASH PADS WHERE EACH DOWNSPOUT CONNECTS TO THE UNDERGROUND CONVEYANCE PIPES AND CONSTRUCT CONVEYANCE PIPES INTO FACILITY.
14. PLACE FILTER FABRIC OVER STONE ENVELOPE AND PLACE SPECIFIED DEPTH OF TOPSOIL OVER FACILITY. INSTALL INLET FILTERS IMMEDIATELY.
15. COMPLETE FINAL GRADING TO ACHIEVE PROPOSED FINISHED GRADE ELEVATION. ALL GRADING ACTIVITIES OVER THE FACILITY IS TO BE COMPLETED WITH CAUTION TO PREVENT CRUSHING PIPING AND EXCESSIVE COMPACTION OVER THE FACILITY.

MODIFIED SUBSOIL CONSTRUCTION SEQUENCE (FOR INFILTRATION TRENCH 1 ONLY)

STEPS 16–21 TO BE INSERTED BETWEEN STEPS 10 AND 12 ABOVE FOR INFILTRATION TRENCH

16. USING LOW GROUND PRESSURE TRACK EQUIPMENT REMOVE AN ADDITIONAL 24 INCHES OF EXISTING SOIL MATERIAL FROM THE BOTTOM OF THE TRENCH TO THE MODIFIED SUBSOIL ELEVATION. TRAVEL ON FRESHLY EXPOSED SUB–GRADE SHOULD BE MINIMIZED WITH ANY EQUIPMENT. NO RUBBER TIRE EQUIPMENT IN THE EXCAVATION FROM THIS STEP FORWARD TO COMPLETION OF SOIL PLACEMENT IN THE BASIN.
17. 24–INCHES OF MODIFIED SUBSOIL MATERIAL THAT MEET THE FOLLOWING SPECIFICATION AND MUST BE APPROVED BY PENN'S TRAIL ENVIRONMENTAL, LLC::
    - SOIL FREE OF ORGANIC MATTER, ASH, CINDER, AND DEMOLITION DEBRIS.
    - PARTICLE SIZE DISTRIBUTION THAT IS WELL GRADED.
    - PLASTICITY INDIEX LESS THAN 10.
    - LESS THAN 15% BY WEIGHT ROCK FRAGMENTS LARGER THAN 3–INCHES, LESS THAN 30% BY WEIGHT LARGER THAN 3/4–INCHES AND LESS THAN 30% BY WEIGHT SMALLER THAN THE NO. 200 SIEVE.
18. APPROVED MODIFIED SUBSOIL SHALL BE PLACED TO RE–ATTAIN FINAL DESIGN GRADE AT BOTTOM OF EXCAVATION FOLLOWING COMPACTION IN ONE LIFT. NO WHEELED EQUIPMENT (INCLUDING "BOBCATS") IS PERMITTED TRAVEL ON THE FILL.
19. SOIL MATERIAL SHALL BE COMPACTED WITH A SMOOTH DRUM ROLLER HAVING A DRUM WIDTH OF AT LEAST 24 INCHES (RAMMAX TYPE). SHARP TURNS ARE TO BE AVOIDED. NO "SHEEP'S FOOT" OR OTHER DRUM PATTERNING NOR "JUMPING JACK" TYPE HAND–HELD COMPACTORS SHALL BE ALLOWED. VIBRATORY ROLLING IS DISCOURAGED AND INITIAL ATTEMPTS TO MEET OPTIMUM DENSITY SHALL BE WITHOUT VIBRATORY FEATURE ENGAGED.
20. AFTER THE COMPACTING COMPLETE AND APPROVED BY FIELD INSPECTOR, THE SURFACE SHALL BE SCARIFIED USING A "LANDSCAPE RAKE" OR STEEL TINE EQUIVALENT TO A DEPTH OF ONE OR TWO INCHES.
21. TESTING USING DOUBLE RING INFILTROMETERS SHALL BE CONDUCTED IN PLACE AFTER SCARIFICATION TO CONFIRM PERMEABILITY RATE(S) DESIRED BY PENN'S TRAIL ENVIRONMENTAL, LLC OR OTHER CONSULTANT APPROVED BY THE PROJECT ENGINEER.

REFERENCE NOTE

REFER TO THE PCSM NOTES & DETAILS PLAN FOR:

- COMPLETE P.C.S.M. NOTES
- PCSM BMP DETAILS
- BMP INSTALLATION STAGING

MAINTENANCE CERTIFICATION

THE DETENTION BASINS AND STORMWATER BEST MANAGEMENT PRACTICE FACILITIES (B.M.P.'S) AS SHOWN IN THIS PLAN ARE A BASIC AND PERPETUAL PART OF THE STORM DRAINAGE SYSTEM OF SCHWENKSVILLE BOROUGH, AND AS SUCH ARE TO BE PROTECTED AND PRESERVED IN ACCORDANCE WITH THE APPROVED FINAL PLAN BY THE PROPERTY OWNER. SCHWENKSVILLE BOROUGH AND/OR ITS AGENTS RESERVES THE RIGHT AND PRIVILEGE TO ENTER UPON SUCH LANDS FROM TIME TO TIME FOR THE PURPOSE OF INSPECTION OF SAID STORMWATER BMP'S IN ORDER TO DETERMINE THAT THE STRUCTURAL AND DESIGN INTEGRITY ARE BEING MAINTAINED BY THE OWNER. IN THE EVENT THAT MAINTENANCE AND STRUCTURAL INTEGRITY ARE NOT MAINTAINED BY THE OWNER AS REQUIRED BY THE BOROUGH AND THE APPROVED PLAN, THE OWNER HEREBY GRANTS TO THE BOROUGH THE RIGHT TO ENTER UPON SUCH PROPERTY AND TO PERFORM ANY AND ALL IMPROVEMENTS, REVISIONS OR MAINTENANCE AS MAY BE DETERMINED NECESSARY BY THE BOROUGH AND TO RECOVER THE COSTS THEREOF FROM THE OWNER BY ALL LAWFUL MEANS INCLUDING, BUT NOT LIMITED TO, THE IMPOSITION OF A MUNICIPAL LIEN ON THE SUBJECT PROPERTY. THE OWNER SHALL NOT PLACE ANY STRUCTURES OR ALTER THE GRADING SO AS TO COMPROMISE THE DESIGNED OPERATION OF THE BMP'S.

_____ _____

DAVID N. LEH, P.E., ON THIS DATE _____, HAS REVIEWED AND HEREBY CERTIFIES THAT THE SWM SITE PLAN MEETS ALL DESIGN STANDARDS AND CRITERIA OF THE MUNICIPAL ORDINANCE NO. CHAPTER 140 STORMWATER MANAGEMENT.

_____

DAVID N. LEH, P.E., BOROUGH ENGINEER

THIS DRAWING IS NOT TO BE USED FOR CONSTRUCTION UNLESS STAMPED: "ISSUED FOR CONSTRUCTION"

No.	REVISION	DATE
11	REVISED PER BOROUGH EMAIL COMMENTS (10/09/18)	OCTOBER 24, 2018
10	REVISED PER BOROUGH EMAIL COMMENTS (07/06/18) & 07/09/18)	AUGUST 16, 2018
9	REVISED PER BOROUGH LTR. (12/20/17), SEWER AUTH. LTR. (01/31/18)	JUNE 5, 2018
8	REVISED PER MCCD TECHNICAL REVIEW (03/12/18)	MAY 4, 2018
7	REVISED PER MCCD ADMINISTRATIVE INCOMPLETENESS REVIEW (01/09/18)	JANUARY 16, 2018
	(SEE COVER SHEET FOR COMPLETE LIST OF PLAN REVISION)	
	PLAN ORIGINATION DATE	JUNE 24, 2016

POST–CONSTRUCTION STORMWATER MANAGEMENT PLAN

AS PART OF

CENTENNIAL APARTMENTS

PREPARED FOR

HOFF PROPERTIES, LLC

SITE SITUATE IN

SCHWENKSVILLE BOROUGH, MONTGOMERY COUNTY, PA

RICHARD C. MAST ASSOCIATES, P.C.
Richard C. Mast Associates, P.C.
Consulting Engineers and Surveyors
www.rcmaonline.com
The Village at Lederach
658 Harleysville Pike, Suite 150
Harleysville, PA 19438
(215) 513-2100

DRAFTED BY	PROJ. MNGR.	PROJECT NO.	DRAWING NO.
R.A.F.	D.B.C.	2800	13 OF 22

Q:\Project\Admin\2800 Series\2800 Hoff – Centennial Street Apartments\6 Project CAD Files\2800 12 PCSM

P.C.S.M. NOTES

GENERAL:

1. The management of post construction stormwater for the project site has been planned and designed, to the extent practicable, in order to accomplish the following:
   - 1.1. The PCSM Plan will, to the extent practicable, preserve the integrity of stream channels and maintain and protect the physical, biological and chemical qualities of the receiving stream by the implementation of the preventive and mitigative BMP's, as described in the PCSM Plan, to minimize potential impacts caused by the planned development of the site to the flow rate, volume and quality of stormwater.
   - 1.2. The PCSM Plan will, to the extent practicable, prevent an increase in the rate of stormwater runoff by the implementation of proposed rate reduction BMP's, as described in the PCSM Plan, to offset the increase in runoff rate caused by the planned development of the site.
   - 1.3. The PCSM Plan will, to the extent practicable, minimize any increase in stormwater runoff volume by the implementation of proposed volume reduction BMP's, as described in the PCSM Plan, to offset the increase in runoff volume caused by the planned development of the site.
   - 1.4. The PCSM Plan will, to the extent practicable, minimize impervious area by minimizing the proposed impervious areas to only those areas required for the planned development of the site.
   - 1.5. The PCSM Plan will, to the extent practicable, maximize the protection of existing drainage features and existing vegetation by minimizing the limit of disturbance to only those areas required for the planned development of the site and by minimizing disturbance of areas that may adversely affect existing site drainage features.
   - 1.6. The PCSM Plan will, to the extent practicable, minimize land clearing and grading by minimizing the limit of disturbance and proposed impervious areas to only those areas required for the planned development of the site.
   - 1.7. The PCSM Plan will, to the extent practicable, minimize soil compaction by minimizing the limit of disturbance, and restricting construction activities and vehicles to within the limit of disturbance, to only those areas required for the planned development of the site.
   - 1.8. The PCSM Plan will, to the extent practicable, utilize structural and nonstructural BMPs that prevent or minimize changes in stormwater runoff by applying the guidelines presented in the Pennsylvania Stormwater Best Management Practices Manual for the design of the proposed BMP's described in the PCSM Plan.
2. The following Non-Structural BMPs and Structural BMPs are shown on the PCSM plan:
   - 5.4.1 Protect Sensitive/Special Value Features
   - 5.6.1 Minimize Total Disturbed Area - Grading
   - 5.6.2 Minimize Compaction in Disturbed Areas
   - 5.6.3 Re-Vegetate and Re-Forest Disturbed Areas, Part 2 Re-vegetate
   - 6.4.4 Infiltration Trench (2 facilities)
   - 6.4.5 Rain Garden/Bioretention (1 facility)
   - 6.4.10 Infiltration Berm / Retentive Grading
   - 6.7.3 Soils Amendment & Restoration
   - Subsurface Detention Basin (2 facilities) (Rate Control only)
3. Refer to the PCSM Narrative for "Centennial Apartments" prepared by RCMA that is part of the PSCM Plan.
4. The Permittee/owner shall record (or cause the recording of) the PCSM Plan with the recorder of deeds.

SEQUENCE OF PCSM BMP INSTALLATION:

5. PCSM BMP shall be installed in conjunction with earthmoving activities as described in the "Earthmoving/BMP Construction Sequence" notes, also shown on this plan.

CRITICAL STAGES OF IMPLEMENTATION:

6. A licensed professional or their designee shall be present onsite and be responsible during the following critical stages of implementation of the approved PCSM Plan:
   - a. Prior to construction activities:
     - a.1. (5.4.1, 5.6.1, 5.6.2., & 5.6.3, Part 1) Verify tree protection fence is installed and protection areas have been staked.
     - a.2. (6.4.4) Verify infiltration facilities are surrounded with safety fence and/or tree protection fence;
   - b. During construction activities:
     - b.1. (6.4.4) Verify Infiltration Trenches are built as per details and that roof drains are connected,
     - b.2. (6.4.5) Verify compost is applied to sub-grade within designated areas, then scarified and verify Planting Soil mixture is as specified and installed at specified depth.
     - b.3. (6.7.3) Verify compost is applied to sub-grade within designated areas, then scarified and verify Topsoil Amendment mixture is as specified and installed at specified depth,
     - b.4. (6.4.10) Verify infiltration berm height as specified and that top-of-berm elevation is consistent and maintained back to existing grade.
   - c. Following construction activities and installation of PCSM BMPs:
     - c.1. (6.7.3) Verify Topsoil Amendment mixture has been applied to all designated areas,
     - c.2. (5.6.3, Part 2 & 6.4.5) Verify specified quantity and species of proposed landscaping is installed and in the locations shown (including Rain Garden).
7. A licensed professional will be responsible to provide a final certification, pursuant to 25 Pa. Code § 102.8(1) along with the required NOT and record drawings, indicating that the project site was constructed in accordance with the approved or modified PCSM Plan.
8. All PCSM BMPs shall be installed by the developer or his designee (contractor) in accordance with the approved land development plans and PCSM plan.

RECEIVING SURFACE WATERS:

9. The site is located within the Perkiomen Creek Watershed (Main Stem, Green Lane Reservoir Dam to Mouth). Runoff from the project site drains directly into an unnamed tributary to the Perkiomen Creek (reach 02040203000066). The classification pursuant to Chapter 93 and the Statewide Designated Use Listing are: TSF, MF. The Perkiomen Creek is not impaired according to Category 4 or 5 of the current Integrated Water Quality Monitoring and Assessment Report.

CONSTRUCTION:

10. In addition to the information below, refer to the "Construction Notes" shown on the Construction Improvement Plan.
11. Where infiltration BMPs are being utilized, the permittee and co-permitee must ensure that soil compaction is avoided or minimized in those areas. If the areas planned for infiltration BMPs are compromised through compaction or other means, additional soil testing must be performed to verify that the BMP will perform as planned.

(5.4.1, 5.6.1, & 5.6.3, Part 1) Protect Sensitive/Special Value Features, Minimize Total Disturbed Area - Grading:

12. Install tree protection fencing (as shown) immediately upon completion of Temporary Construction Entrance to ensure tree protection areas remain undisturbed (protected) during construction.
13. Stake locations of and install orange safety fencing around of infiltration BMPs and grading protection areas immediately upon completion of Temporary Construction Entrance to ensure areas remain undisturbed (protected) during construction.

(5.6.2) Minimize Soil Compaction in Disturbed Areas:

14. Area shall not be stripped of existing topsoil.
15. Area shall not be subject to excessive equipment movement. Vehicle movement, storage or equipment/material laydown shall not be permitted in designated areas of minimized soils compaction.
16. To the greatest extent possible. access to the areas by construction equipment shall be restricted.
17. The use of soil amendments and additional topsoil is permitted. Light grading may be done with tracked vehicles that prevent compaction.

Lawn and turf grasses are acceptable uses. Planted meadow is an encouraged use.

(5.6.3, Part 2) Re-vegetate (proposed landscaping):

18. Refer to complete "General Landscaping Notes" provided on the Landscaping Plan for installation specifications.

(6.4.4) Infiltration Trenches:

19. Refer to "Subsurface Infiltration Trench" details for additional information and installation sequence.
20. This BMP applies to Underground Basin A / Infiltration Trench 1 & Underground Basins B and C.

Material:

21. All Infiltration facility piping must be H.D.P.E, P.V.C, or C.M.P. All piping within the facility must be perforated pipe in order to permit stormwater migration into the surrounding stone envelope and subsurface soils. (Including yard inlet riser pipes). Conveyance pipe(s) and outfall pipes are to be solid pipes.
22. The stormwater **storage** envelope is to be AASHTO #3 aggregate. Facility **piping** envelope is to be AASHTO #57 aggregate.
23. Non-woven geotextile is to be placed on the top, bottom, and sides of the stone envelope. US Fabrics - US120NW (light weight) polypropylene non-woven geotextile (or approved equal).

Installation:

24. Erosion control filters shall be installed and maintained at all upstream entry points to the facility until contributing areas achieve final stabilization
25. The bottom of excavated trench is to be scarified prior to placement of the geotextile fabric and stone envelope.
26. The stone envelope and pipes are to be level to ensure even distribution of runoff through the facility.
27. The facility shall be completed without the use of construction equipment within the trench.
28. Roof drains contributing to trenches are to have overflow protection outlets and splash pads where each downspout connects to the underground conveyance pipes.
29. Underground conveyance pipe(s) between dwelling downspout(s) and facilities shall be laid at a minimum ¼" per foot slope. Pipes within the shall be perforated and terminate into a perforated catch-basin or vertical pipe (observation port) to finish grade.

(6.4.5) Rain Garden/Bioretention:

30. This BMP applies to Rain Garden #1.

Material:

31. The **planting soil mix** shall be a sandy loam soil capable of supporting a healthy vegetative cover. The planting soil mix shall have a pH of between 5.5 and 6.5, a clay content of less than 10%, an organic matter content of between 5% to 8% and shall be free of toxic substances and unwanted plant material.
32. The planting soil mix shall consist of 40% coarse sand, 20% to 30% compost and 30% to 40% topsoil. Total depth of planting soil is 24" minimum, or as specified on detail, whichever is greater.

Installation:

33. Refer to the "Rain Garden/Bioretention BMP" Details.
34. Where erosion of sub-grade has caused accumulation of fine materials and/or surface ponding in the graded bottom, remove with light equipment and scarify underlying soils to a minimum depth of 6 inches with a York rake or equivalent light tractor.
35. Protect Rain Garden from sediment at all times during construction. Appropriate measures shall be used at the toe of the slopes that are adjacent to the Rain Garden to prevent sediment from washing into these areas during construction.
36. Planting soil shall be placed immediately after approval of sub-grade preparation/bed installation.
37. After completion, gardens are to be seeded with 75% ERNMX-180 Rain Garden seed mixture (or approved equal) and 25% rye grass.
38. Protect Rain Garden from sediment at all times during construction. Appropriate measures shall be used at the toe of the slopes that are adjacent to the Rain Garden to prevent sediment from washing into these areas during construction.

(6.4.10) Infiltration Berm / Retentive Grading:

Material:

39. The top 12 inches of the infiltration berm shall consist of high quality topsoil that is capable of supporting a healthy vegetative cover. The remainder of the berm may be constructed with high quality topsoil, amended soil or satisfactory well-drained soil materials complying with ASTM D2487 soil classification groups GW, GP, GM, SM, SW and SP. Vegetative cover shall be as specified on the PCSM plan.

Installation Sequence:

40. Refer to the "Infiltration Berm BMP" Detail for installation sequence.
41. Protect surface ponding area at the base of the berm from compaction during construction of the infiltration berms.
42. Construction infiltration berm along (parallel to) elevation contours with the crest of the berm and the base of the berm constructed at a level grade.
43. The contractor shall construct the berms, at a minimum, to the specified berm height to ensure the calculated impoundment storage capacity is provided

Topsoil Restoration (as needed):

44. Topsoil restoration may be completed in construction areas desired to be improved due to compaction as a result of equipment.
45. Spread 3 inches of approved compost on existing soil. Incorporate amendments into existing soil to a depth of 8-10 inches (for a 37% inclusion rate) using a rotary tiller, chisel plow, or other appropriate equipment. Finish grade with light equipment.
46. After permanent planting/seeding, 4 inches of compost blanket will be applied to all areas not protected by grass or other plants.

(6.7.3) Compost Soil Amendment/Restoration:

47. Soil Amendment activities are to be completed prior to installation of permanent landscaping.

Material:

48. The **amended soil mix** shall be a sandy loam soil capable of supporting a healthy vegetative cover. The soil mix shall have a pH of between 5.5 and 6.5, a clay content of less than 10%, an organic matter content of between 5% to 8% and shall be free of toxic substances and unwanted plant material.
49. Finished soil mixture: 8" depth. 63% topsoil, 37% compost.
50. Compost shall be a well decomposed, stable, weed free organic matter source. It shall be derived from: agricultural, food, or industrial residuals; biosolids (treated sewage sludge); yard trimmings; source-separated or mixed solid waste. The product shall contain no substances toxic to plants and shall be reasonably free (< 1% by dry weight) of man-made foreign matter. The compost will possess no objectionable odors and shall not resemble the raw material from which it was derived. The product shall be certified through the U.S. Composting Council's (USCC) Seal of Testing Assurance (STA) Program.
51. Only compost products that meet all applicable state and federal regulations pertaining to its production and distribution may be used in this application. Approved compost products must meet related state and federal chemical contaminant (e.g., heavy metals, pesticides, etc.) and pathogen limit standards pertaining to the feedstocks (source materials) in which it is derived.
52. Before delivery of the compost, supplier must provide a copy of the lab analysis, performed by a STA Program certified lab, verifying that the compost meets the product parameters listed above. The lab analysis should not be more than 90 days old.
53. On-site soils with organic content of at least 5% can be properly stockpiled (to maintain organic content) and reused with added compost/sand materials.

Installation:

54. Subgrade surface shall be reasonably free of large clods, roots, stones greater than 4 inches, and other material which will interfere with the amendment process.
55. Distribute 2" of compost and scarify subgrade.
56. In-place application of soil amendment materials: Compost shall be uniformly applied over prepared subbase within the amendment area at an average depth of 3" inches. Topsoil shall be uniformly applied at an average depth of 5" inches. Combine all materials to result in an average depth of 8 inches using a rotary tiller, chisel plow, or other appropriate equipment.
57. Pre-plant fertilizer and pH adjusting agents (e.g., lime and sulfur) may be applied before incorporation, as necessary.
51. Pre-mixed amendment mixture shall be applied over prepared subbase within the amendment area at an average depth of 8" inches. Minor settling should be anticipated.
52. Rake soil surface smooth prior to seeding, sprigging, sodding, or hydroseeding. The soil surface shall be reasonably free of large clods, roots, stones greater than 2 inches, and other material which will interfere with planting and subsequent site maintenance. Water thoroughly after seeding, sprigging, or sodding.
53. Where necessary, top-dress newly seeded and sprigged turf areas with a 1/4 inch layer of fine compost (3/8 inch screen, minus), then water to protect against hot, dry weather or drying winds.
54. The final, resulting compost soil amendment must be capable of supporting a healthy vegetative cover and meet all of the mandatory criteria listed in Table 4 of BMP Section 6.7.3: Soil Amendment & Restoration of the PADEP "Pennsylvania Stormwater Best Management Practices Manual."

OPERATION AND MAINTENANCE:

55. The Permittee, Hoff Properties, LLC , its successors and assigns, or co-permittee is responsible for the Long-term operation and maintenance of the PCSM BMPs, unless responsibility is transferred in the Notice of Termination (NOT) ar as directed in PADEP Chapter 102, and shall provide for the necessary access related to long-term operation and maintenance of the PCSM BMPs. All Operation and Maintenance shall be performed per the requirements of the Pennsylvania Stormwater Best Management Practices Manual. Inspections should occur to ensure that the facilities are operating as designed and to schedule maintenance that may be required.

(5.6.3, Part 2) Re-vegetate (proposed landscaping):

56. Trees and shrubs should be inspected semiannually to evaluate for health. Remove and replace dead and/or diseased plants.
57. Inspect for and remove any invasive species.

(6.4.4) Infiltration Trenchs:

58. To ensure runoff capture, trash, grass clippings, and debris should be removed from inlet grates after all large storm events and more frequently in autumn.
59. Inspect and clean catch basins and inlets least 2 times per year.
60. Vegetation (lawn, trees, shrubs, etc.) over and surrounding the facility should be maintained in good condition, and bare spots re-vegetated as soon as possible.
61. Vehicles should not be parked or driven on a vegetated infiltration facility, and care should be taken to avoid excessive compaction by mowers.
62. If subsurface infiltration trench is no longer functioning properly and the standard maintenance has not improved the function - the existing subsurface infiltration trench shall be re-excavated and construction of a new subsurface infiltration trench installed following the design and construction sequence.

(6.4.5) Rain Garden/Bioretention:

63. Inspect Rain Garden annually, and after major storm events, for damage to embankment, berms, spillway and outlet structures. Repair undercut or eroded areas.
64. Annually inspect inlet and outlet structures to ensure they are operational and free of debris.
65. Maintenance of the Rain Garden shall include watering of seeded areas, mowing, cultivation, weed control, disease and pest control, replacement of dead or unacceptable materials, filling under settlement areas, reseeding washouts, and any other procedure consistent with good horticultural practice necessary to insure normal, vigorous and healthy growth.
66. Mow rain garden areas to 6" height in early June, mid-July, and mid-August during the first growing season, to discourage growth of aggressive weed species and bring sunlight to low-growing natives. Review progress of rain garden growth prior to mowing to confirm appropriateness of mowing.
67. After the first growing season, mow the rain garden floor areas twice a year. Once a year is sufficient to discourage woody seedlings, brambles, invasive vines and Multiflora rose. Mowing more than twice a year will only encourage cool season grass species and create additional turf areas. Recommended dates for mowing are early July for the first cutting and a second cutting in March up to April 15th. This will maximize bird and animal habitat and promote desirable and attractive vegetation. Mow when the ground is dry and cut at height of 6" to 8" during the dormant season. Monitor areas for intrusion by invasive plants such as thistle. Eliminate invasives by spot mowing, spot spraying or wick application of an appropriate herbicide (approved for application in water resource areas), or manual or mechanical pulling. A combination of strategies may be the best approach.
68. Pull weeds of the following invasive species deemed detrimental to rain garden/wetland plantings. Purple Loosestrife (Lythrum salicaria); Common Reed (Phragmites australis); Cattails (Typha spp).
69. An underdrain is to be installed and will provide slow release of runoff (dewatering) in the absence of positive infiltration. In the event runoff remains in the facility for extended lengths of time (greater than 72 hours), additional lengths of underdrain may be installed with permission of the municipality and MCCD and in cooperation with the responsible plan design firm.
70. If rain garden is no longer functioning properly and the standard maintenance has not improved the function - the existing rain garden shall be re-excavated and construction of a new rain garden installed following the design and construction sequence.

(6.4.10) Infiltration Berm / Retentive Grading:

71. Regularly inspect to ensure berms and surface ponding areas are infiltrating; monitor drawdown time after major storm events
72. Berms with turf grass cover should be maintained by mowing. Trees and shrubs may require annual mulching. Berms with a meadow planting will require annual mowing and clippings removal.
73. Remove invasive plants as needed and routinely remove accumulated trash and debris.
74. Inspect for signs of flow channelization and restore level base and crest of berm gradients immediately after deficiencies are observed.
75. If infiltration berm is no longer functioning properly and the standard maintenance has not improved the function - the existing infilteration berm shall be re-excavated and construction of a infiltration berm installed following the design and construction sequence

(6.7.3) Compost Soil Amendment/Restoration:

76. Additional soil amendment/restoration material may need to be added over time due to settling.
77. Soils should be monitored to sustain vigorous plant growth.
78. Maintain ground covers and remove invasive weeds.
79. Bare spots should be immediately stabilized and re-vegetated.

Landscaped/Vegetated Areas:

80. Soils should be monitored to sustain vigorous plant growth. Maintain with a minimum uniform 70% vegetative cover with a density capable of resisting erosion and remove invasive weeds.
81. Bare spots should be immediately stabilized and re-vegetated.
82. Trees and shrubs should be inspected semiannually to evaluate for health.
83. Mulch should be inspected annually and should be re-spread/replenished when erosion is evident. Replace mulch every 2 to 3 years.

Riprap Aprons:

84. Structures shall be inspected annually and after heavy rains for signs of erosion and dislodging of the rock. Repairs should be performed immediately to prevent further damage. Replace washed out or scoured areas with additional, appropriately size rock.

WASTE MATERIALS:

85. All PCSM BMP waste material shall be reused or composted at the site or removed from the site and recycled, composted or disposed of in accordance with the Department's Solid Waste Management Regulations at 25 Pa. Code 260.1 et. seq., 271.1 et. seq. and 287.1 et. seq.
86. Anticipated PCSM BMP waste materials from the project site include the following: accumulated sediments, accumulated debris and trash, leaves, grass clippings, garden residue, tree trimmings, chipped shrubbery and other vegetative material.

RECYCLING AND DISPOSAL OF WASTES:

87. Under no circumstances may PCSM BMPs be used for temporary storage of demolition materials or construction wastes.
88. All sediment removed from BMPs shall be disposed of in the manner described on the plan drawings.
89. Trash is to be disposed of properly and recycled when possible.

SOIL INFORMATION:

90. Soil information for the site was obtained from the US Department of Agriculture, Natural Resources Conservation Service Web Soil Survey website.
    - PkD Penn-Klinesville channery silt loam, 15 to 25 percent slopes
    - ReB Readington silt loam, 3 to 8 percent slopes
91. Refer to the PCSM Narrative for information on the type, depth, slope, physical characteristics, use limitations and resolutions for use limitations of the delineated soils.

BOROUGH NOTES:

92. A modification to a submitted Stormwater Management (SWM) Site Plan that involves a change in SWM BMPs or techniques, or that involves the relocation or redesign of SWM BMPs, or that is necessary because soil or other conditions are not as stated on the SWM Site Plan as determined by the Borough, shall require a resubmission of the modified SWM Site Plan in accordance with the Schwenksville Borough Stormwater Management Ordinance Chapter 140, Part 1, Article IV.
93. The developer shall be responsible for providing as-built plans of all SWM BMPs included in the approved SWM Site Plan. The as-built plans and an explanation of any discrepancies with the construction plans shall be prepared by a qualified professional and submitted to Schwenksville Borough for review/approval.
94. No person shall modify, remove, fill, landscape, or alter any SWM BMPs, facilities, areas, or structures without the written approval of Schwenksville Borough.

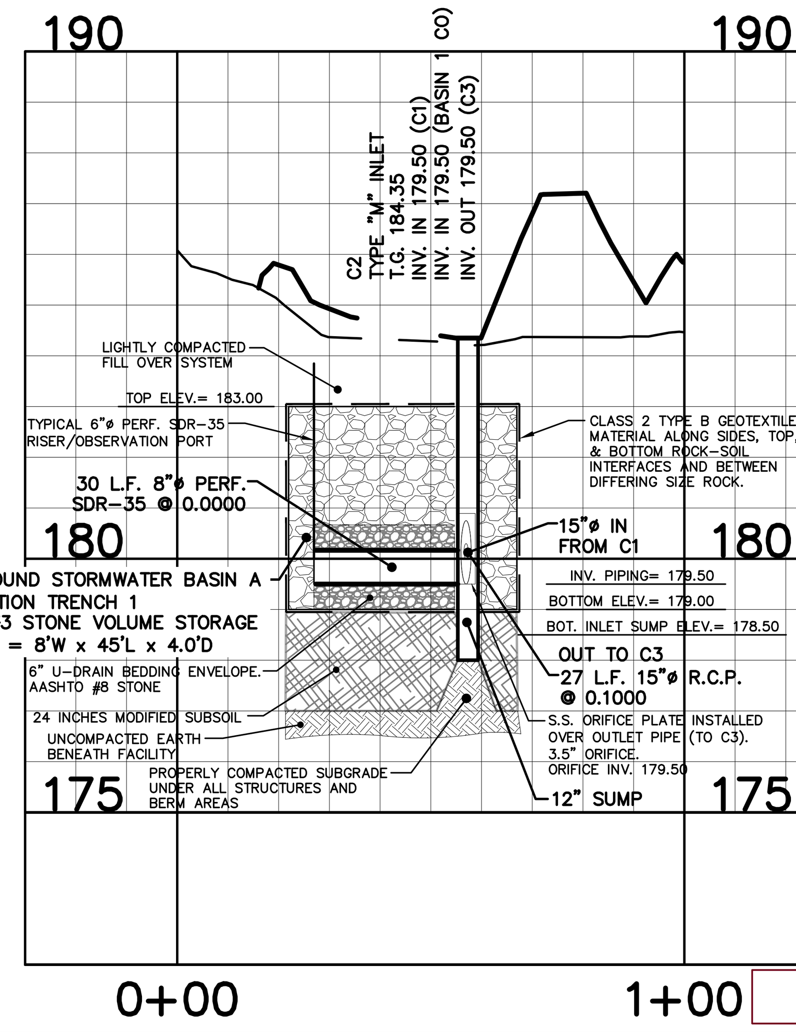

UNDERGROUND BASIN A / INFILTRATION TRENCH 1 CROSS-SECTION

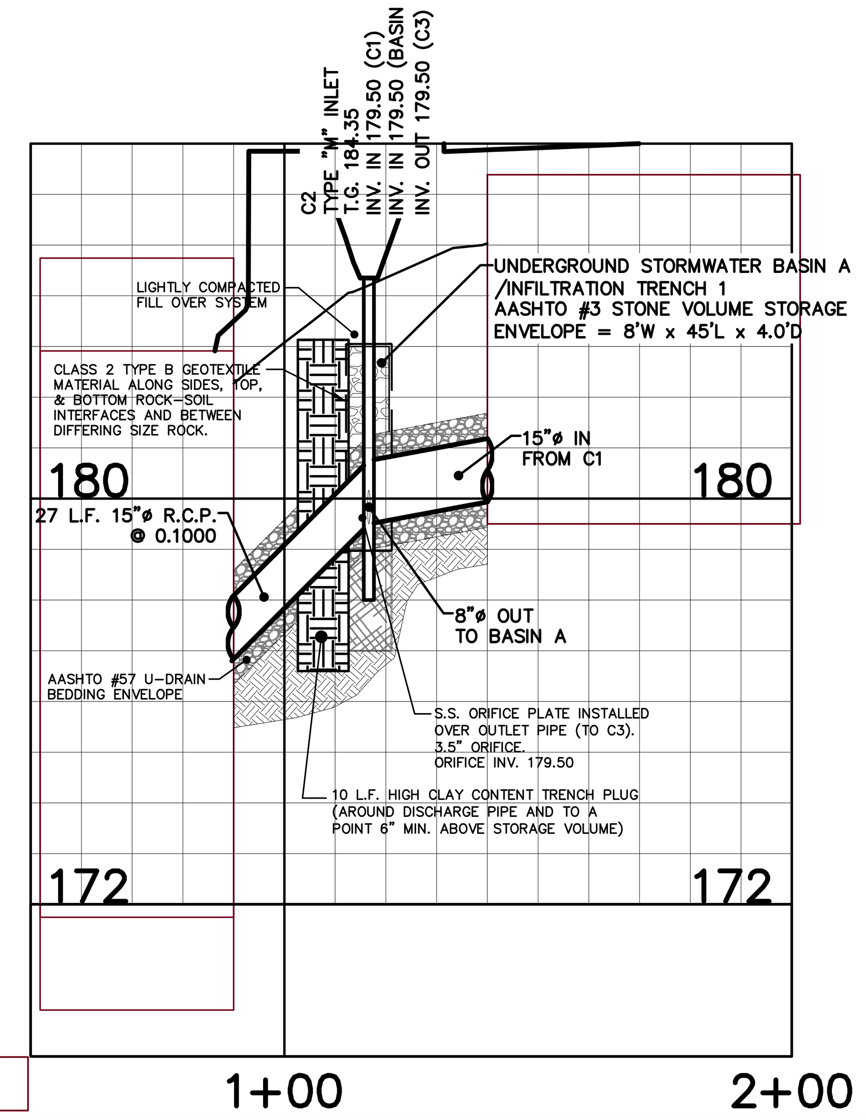

UNDERGROUND BASIN A / INFILTRATION TRENCH 1 PROFILE

FLEXSTORM PURE FILTERS FOR PERMANENT INLET PROTECTION
PRODUCT SELECTION AND SPECIFICATION DRAWING

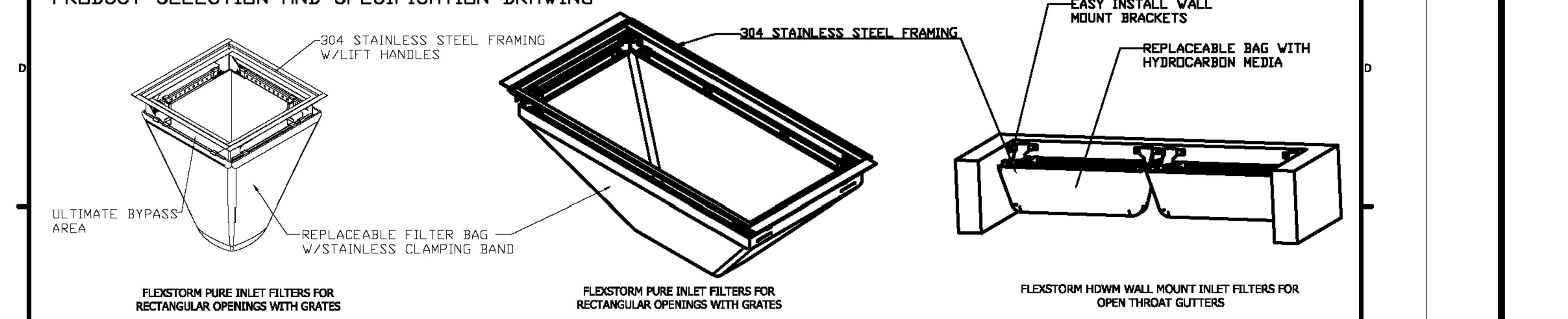

FLEXSTORM PURE INLET FILTERS FOR RECTANGULAR OPENINGS WITH GRATES

FLEXSTORM PURE INLET FILTERS FOR RECTANGULAR OPENINGS WITH GRATES

FLEXSTORM HDWM WALL MOUNT INLET FILTERS FOR OPEN THROAT GUTTERS

Product selection for FLEXSTORM PURE Filters (Permanent Inlet Protection)

Descrip	Inlet Type	Grate Size	Opening Size	Bag Cap (ft^3)	Flow Ratings (CFS) FX/FX+	PC/PC+	Bypass	FX	FX+	PC	PC+
2' x 2' Frame and Grate	Square/Rect (SQ)	24 x 24	22 x 22	3.3	1.8	1.6	4.8	62MHD22FX	62MHD22FXP	62MHD22PC	62MHD22PCP
2' x 4' Penndot Type M & C	Square/Rect (SQ)	26.5 x 48	24 x 44.5	6.3	3.1	2.2	9.5	62PENNMHDFX	62PENNMHDFXP	62PENNMHDPC	62PENNMHDPCP
2' x 6' Frame and Grate	Concrete Box (HD4)	26.5 x 75	24 x 72	10.0	4.8	4.1	13.0	62PENNHD2x6FX	62PENNHD2x6FXP	62PENNHD2x6PC	62PENNHF2x6PCP
3 x 3 Frame and Grate	Square/Rect (SQ)	37.5 x 37.5	36 x 36	7.2	4.4	3.2	9.6	62HDXLFX	62HDXLFXP	62HDXLPC	62HDXLPCP
48" Open Throat Curb Inlet	Wall Mount (WM)	N/A	48	3.3	2.5	4.2	N/A*	62HDWM48FX	62HDWM48FXP	62HDWM48PC	62HDWM48PCP

*FLOW RATINGS SHOWN ARE 50% MAXIMIUM

NOTES:

1. ALL FRAMING IS CONSTRUCTED OF 304 STAINLESS STEEL FOR 25 YEAR SERVICE LIFE RATING
2. TOTAL BYPASS CAPACITY WILL VARY WITH EACH SIZED DRAINAGE STRUCTURE. FLEXSTORM DESIGNS FRAMING BYPASS TO MEET OR EXCEED THE DESIGN FLOW OF THE PARTICULAR DRAINAGE STRUCTURE.
3. UPON ORDERING ADS P/N CONFIRMATION OF THE DOT CALLOUT, FLEXSTORM ITEM CODE, CASTING MAKE AND MODEL, OR DETAILED DIMENSIONAL FORMS MUST BE PROVIDED.
4. FOR WRITTEN SPECIFICATIONS AND MAINTENANCE GUIDELINES VISIT WWW.INLETFILTERS.COM

INSTALLATION:

1. REMOVE GRATE
2. DROP FLEXSTORM INLET FILTER ONTO LOAD BEARING LIP OF CASTING OR CONCRETE STRUCTURE
3. REPLACE GRATE

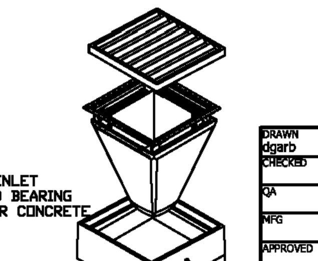

DRAWN dgarb	1/12/2016		
CHECKED		TITLE	
QA			
MFG			
APPROVED		SIZE C	DWG NO Penndot pure for submittal	REV
		SCALE	SHEET 1 OF 1

INLET QUALITY FILTER

N.T.S.

NOIE: WATER QUALITY FILTER TO BE PERMANENT FLEXSTORM PURE OR APPROVED EQUAL. FILTER BAGS TO BE FLEXSTORM PC 'POST CONSTRUCTION' LINE OF FILTER BAGS OR APPROVED EQUAL.

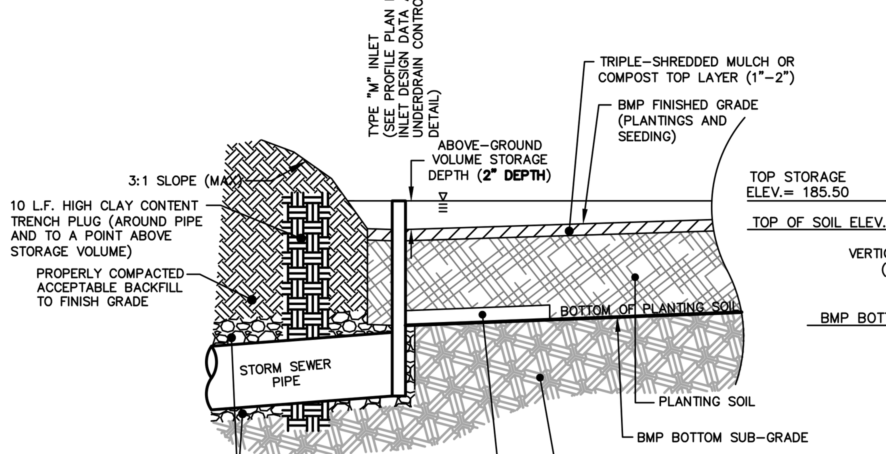

GARDEN OVERFLOW SECTION

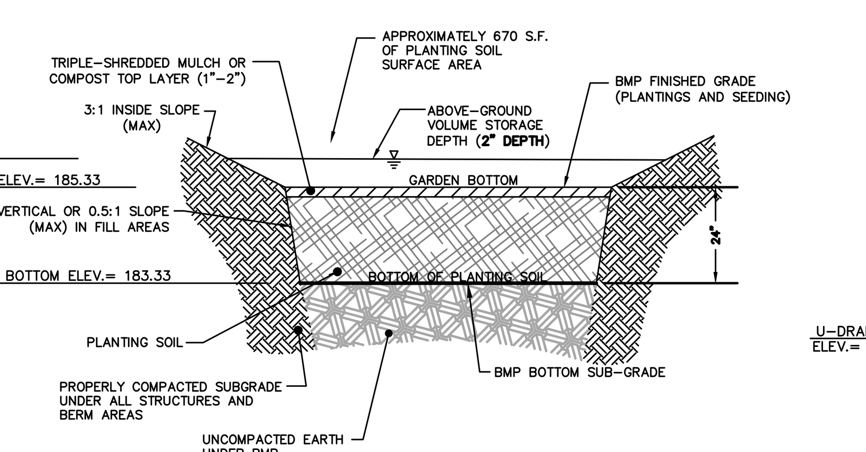

TYPICAL SECTION

CONSTRUCTION NOTES:

1. ANY RAIN GARDEN TO BE CONSTRUCTED PRIOR TO COMPLETE SITE STABILIZATION SHALL BE CONSTRUCTED TO THE PERMANENT FACILITY FINISH BOTTOM GRADE WITHOUT PLANTING SOIL INSTALLED. EXCAVATION OF THE BMP BOTTOM AND PLACEMENT OF THE PLANTING SOIL MIXTURE IS NOT TO BE COMPLETED UNTIL AFTER ALL IMPROVEMENTS WITHIN THE CONTRIBUTING DRAINAGE AREA ARE COMPLETED AND FULLY STABILIZED. (REFER TO EARTHWORK STAGING).
2. PROPOSED IMPROVEMENTS WITHIN THE CONTRIBUTING DRAINAGE AREA FOR ALL RAIN GARDENS SHOULD BE COMPLETED AND THE CONTRIBUTING AREA SHOULD BE COMPLETELY STABILIZED BEFORE EXCAVATION OF THE BMP BOTTOM AND PLACEMENT OF THE PLANTING SOIL MIXTURE.
3. INITIAL EXCAVATION CAN BE PERFORMED DURING ROUGH SITE GRADING BUT SHALL NOT BE CARRIED TO WITHIN ONE FEET OF THE BMP BOTTOM SUB-GRADE. FINAL EXCAVATION SHOULD NOT TAKE PLACE UNTIL ALL DISTURBED AREAS IN THE RAIN GARDEN DRAINAGE AREA, EXCEPT WITHIN THE BMP AREA, HAVE BEEN STABILIZED.
4. CONTRACTOR TO ENSURE A WATERTIGHT SEAL IS PROVIDED FOR ALL STORM SEWER STRUCTURES INSTALLED WITHIN BASINS AND RAIN GARDENS.

CONSTRUCTION SEQUENCE:

5. INSTALL NECESSARY TEMPORARY SEDIMENT CONTROL BMPs TO PROTECT INFILTRATION AREA FROM SEDIMENT.
6. CONSTRUCT RAIN GARDEN TO DESIGN SUBGRADE (NOT BMP DEPTH). CONSTRUCT UNDERDRAIN INTO FACILITY.
7. FROM OUTSIDE THE GARDEN BOTTOM AREA, EXCAVATE BOTTOM TO SPECIFIED BMP DEPTH. DISTRIBUTE 2" OF COMPOST AND SCARIFY SUBGRADE. DO NOT COMPACT THE IN-SITU SOILS.
8. INSTALL SPECIFIED PLANTING SOIL MIXTURE AS PER BMP DETAIL AND IN ACCORDANCE WITH THE P.C.S.M PLAN. LIGHT HAND TAMPING IS ACCEPTABLE IF NECESSARY. PLANTING SOIL SHALL BE PLACED IMMEDIATELY AFTER APPROVAL OF SUB-GRADE PREPARATION/BED INSTALLATION.
9. DISTRIBUTE TOPSOIL AND FINISH GRADE SIDE SLOPES AND BERM. FINISH GRADE AND RESTABILIZE GARDEN SIDE SLOPES AND SURROUNDING LAWN AREAS PREVIOUSLY COMPLETED.
10. ANY SIDE SLOPES OR SURROUNDING LAWN AREAS NOT PREVIOUSLY COMPLETED SHOULD BE ROUGH GRADED TO 8" MINIMUM BELOW FINISH GRADE. DISTRIBUTE 2" OF COMPOST AND SCARIFY SUBGRADE. DISTRIBUTE 8" OF SPECIFIED AMENDED SOIL MIXTURE. FINISH GRADE AND STABILIZE SIDE SLOPES AND LAWN AREAS IMMEDIATELY WITH EROSION CONTROL MATTING.
11. INSTALL 8" FILTER SOCK AROUND TOE-OF SIDE SLOPES TO PREVENT UNDESIRED SILTATION INTO BMP.
12. INSTALL PROPOSED BMP PLANTINGS AND STABILIZE BMP BOTTOM WITH A THIN LAYER OF COMPOST AS PER DETAIL. PRESOAK THE MODIFIED SOIL MIXTURE PRIOR TO PLANTING VEGETATION TO AID IN SETTLEMENT.

RAIN GARDEN/BIORETENTION BMP DETAIL

NTS

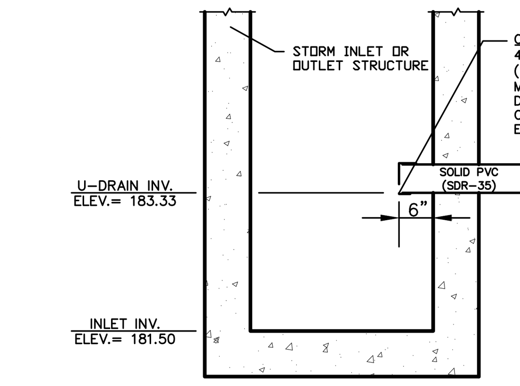

UNDERDRAIN CONTROL DETAIL

NTS

NOTE: DETAIL APPLICABLE TO PROPOSED RAIN GARDEN ONLY.

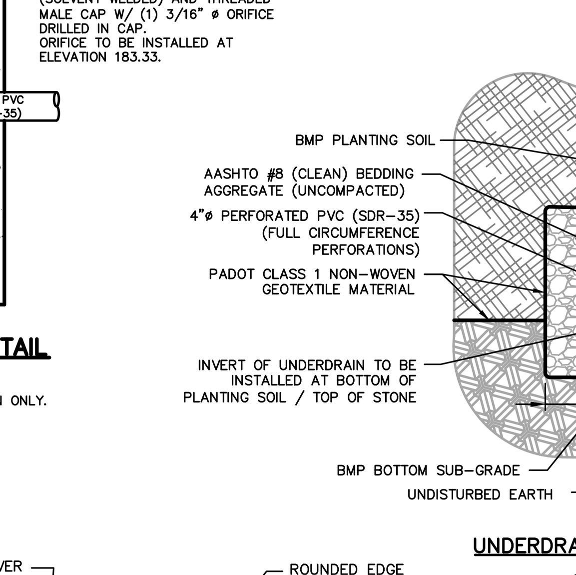

UNDERDRAIN TRENCH DETAIL

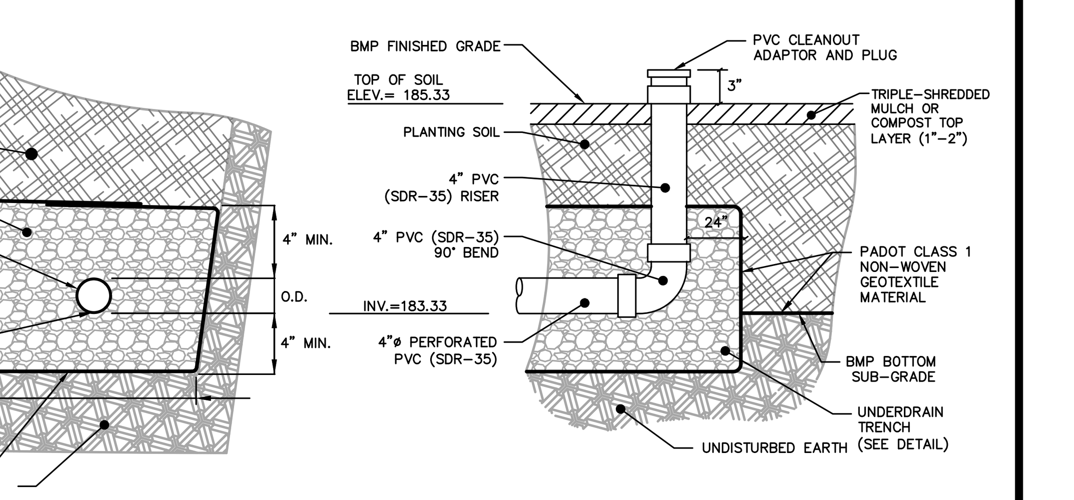

UNDERDRAIN CLEANOUT DETAIL

NOTE:
1. MATERIALS AND CONSTRUCTION SHALL MEET THE REQUIREMENTS OF PADOT SPECIFICATIONS, PUB. 408.
2. INSTALL GEOTEXTILE MATERIAL ON ALL SIDES OF THE TRENCH. OVERLAP MATERIAL A MIN. OF 24 INCHES AT THE TOP OF THE TRENCH.
3. EASILY ACCESSIBLE PVC CLEANOUT RISER, ADAPTER, AND PLUG TO BE PROVIDED AT EACH BEND.

UNDERDRAIN DETAIL

N.T.S.

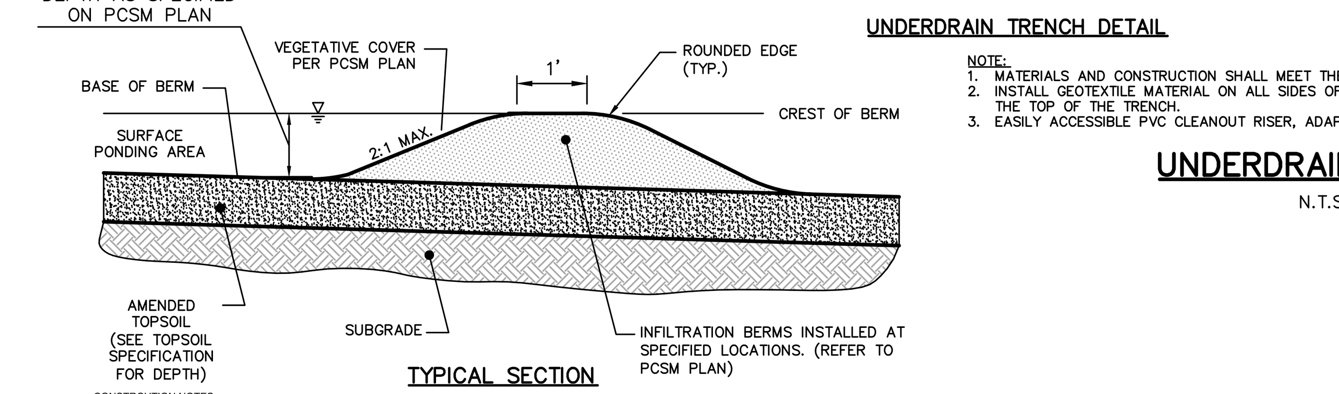

TYPICAL SECTION

CONSTRCUTION NOTES:

1. GROUND SURFACE PREPARATION: REMOVE VEGETATION, DEBRIS, UNSATISFACTORY SOIL MATERIALS, OBSTRUCTIONS, AND DELETERIOUS MATERIALS FROM GROUND SURFACE PRIOR TO PLACEMENT OF FILL. PLOW STRIP, OR BREAK UP SLOPED SURFACES STEEPER THAN 1 VERTICAL TO 4 HORIZONTAL SO THAT FILL MATERIAL WILL BOND WITH EXISTING SURFACE.
2. WHEN EXISTING GROUND SURFACE HAS A DENSITY LESS THAN THAT SPECIFIED BELOW, BREAK UP GROUND SURFACE, PULVERIZE, BRING THE MOISTURE-CONDITION TO OPTIMUM MOISTURE CONTENT, AND COMPACT TO REQUIRED DEPTH AND PERCENTAGE OF MAXIMUM DENSITY.
3. PLACE FILL MATERIALS IN LAYERS NOT MORE THAN 8 INCHES IN LOOSE DEPTH FOR MATERIAL TO BE COMPACTED BY LIGHT COMPACTION EQUIPMENT, AND NOT MORE THAN 4 INCHES IN LOOSE DEPTH FOR MATERIAL TO BE COMPACTED BY HAND-OPERATED TAMPERS.
4. BEFORE COMPACTION, MOISTEN OR AERATE EACH LAYER AS NECESSARY TO PROVIDE OPTIMUM MOISTURE CONTENT. COMPACT TOP 6" OF EXISTING GROUND SURFACE AND EACH LAYER OF FILL TO NOT LESS THAN 85% OF ITS MAXIMUM DRY DENSITY AND WITHIN MINUS 2% AND PLUS 2% OF ITS OPTIMUM MOISTURE CONTENT AS DETERMINED PER ASTM D1557. DO NOT PLACE FILL MATERIAL ON SURFACES THAT ARE MUDDY, FROZEN, OR CONTAIN FROST OR ICE.
5. AFTER PLACING FINAL TOPSOIL LAYER, RAKE SOIL TO A SMOOTH, EVEN-DRAINING SURFACE AND COMPACT LIGHTLY. LEAVE FINISH GRADED AREAS CLEAN AND WELL RAKED, READY FOR VEGETATIVE COVER.
6. CONSTRUCTION INFILTRATION BERM ALONG (PARALLEL TO) ELEVATION CONTOURS WITH THE CREST OF THE BERM AND THE BASE OF THE BERM CONSTRUCTED AT A LEVEL GRADE.
7. BERMS CONSTRUCTED IMMEDIATELY UPHILL FROM ANOTHER BERM SHALL HAVE A MINIMUM 10' WIDE SPILLWAY INSTALLED TO ENSURE CAPTURED RUNOFF OVERFLOWS INTO THE DOWNHILL BERM IMPOUNDMENT AREA. THE MINIMUM DEPTH SPECIFIED FOR THE BERM SHALL BE TO THE SPILLWAY ELEVATION. THE SPILLWAY SHALL BE A PPROXIMATELY 2" LOWER THAN THE TOP-OF-BERM.

INFILTRATION BERM BMP DETAIL

N.T.S.

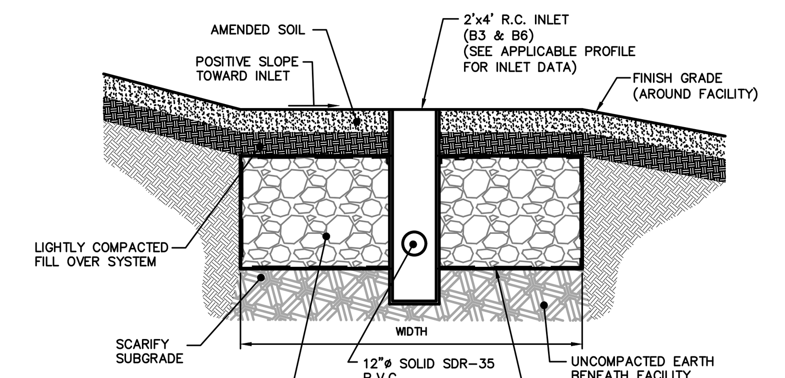

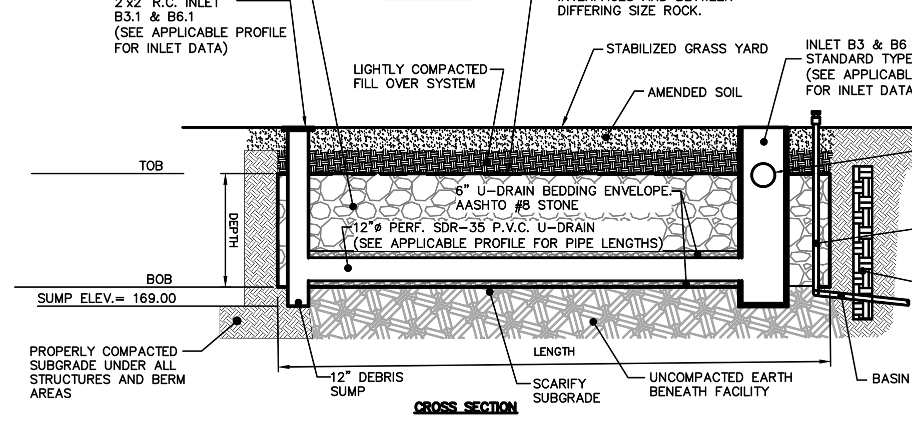

UNDERGROUND BASINS B & C DETAIL

N.T.S.

SEE UNDERGROUND BASIN CONSTRUCTION NOTES HEREON.

NAME	STONE BED LENGTH (FT)	WIDTH (FT)	DEPTH (FT)	TOB (FT)	BOB (FT)	DISTRIBUTION PIPE INV (FT)	DIA (IN)	LENGTH (FT)
BASIN A*	45	8	4	183.00	179.00	179.50	8	30
BASIN B	120	9	3	172.50	169.50	169.50	12	107
BASIN C	145	9	3	172.50	169.50	169.50	12	132

BASIN A* / INFILTRATION TRENCH 1 INCLUDES 24" MODIFIED SUBSOIL (BENEATH AGGREGATE STORAGE ENVELOPE). SEE CROSS SECTION AND PROFILE.

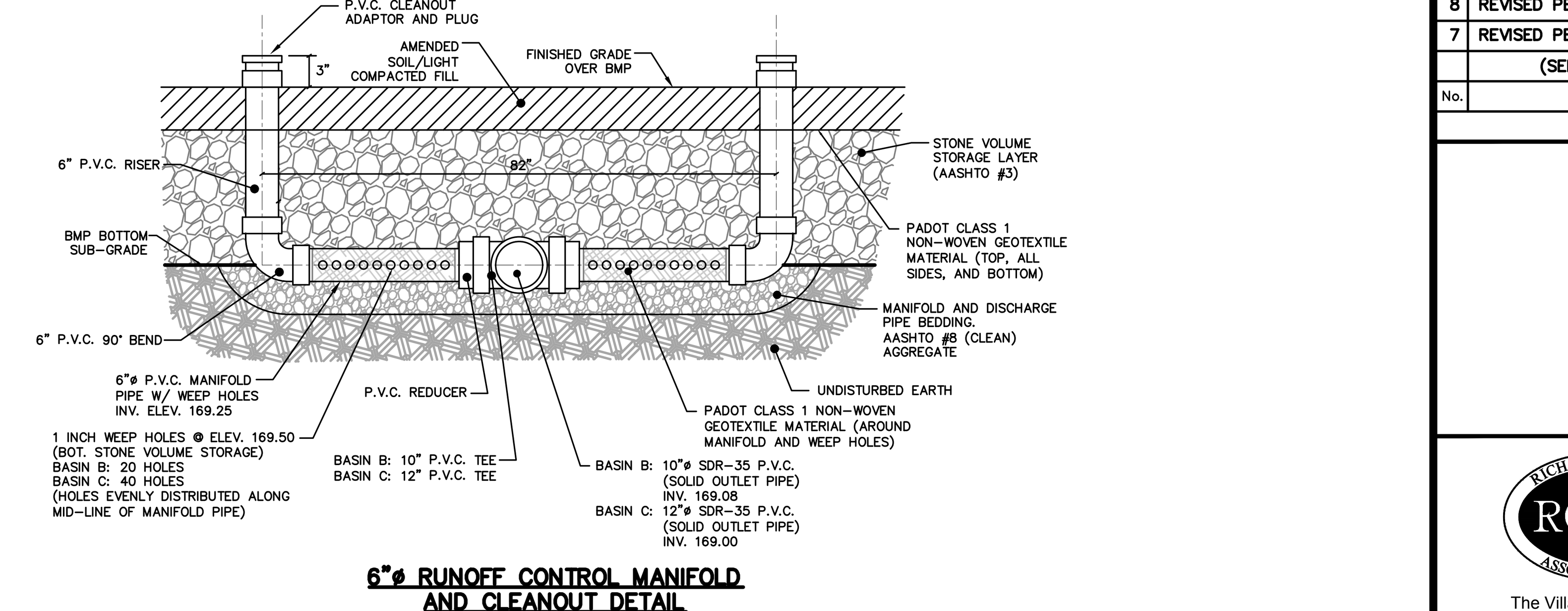

6"ø RUNOFF CONTROL MANIFOLD AND CLEANOUT DETAIL (UNDERGROUND BASINS B & C)

NOTE: ALL MANIFOLD AND CLEANOUT PIPING SHALLL BE SDR-35 P.V.C.

PCSM PLAN – 3 OF 3

THIS DRAWING IS NOT TO BE USED FOR CONSTRUCTION UNLESS STAMPED: "ISSUED FOR CONSTRUCTION"

No.	REVISION	DATE
11	REVISED PER BOROUGH EMAIL COMMENTS (10/09/18)	OCTOBER 24, 2018
10	REVISED PER BOROUGH EMAIL COMMENTS (07/06/18) & 07/09/18)	AUGUST 16, 2018
9	REVISED PER BOROUGH LTR. (12/20/17), SEWER AUTH. LTR. (01/31/18)	JUNE 5, 2018
8	REVISED PER MCCD TECHNICAL REVIEW (03/12/18)	MAY 4, 2018
7	REVISED PER MCCD ADMINISTRATIVE INCOMPLETENESS REVIEW (01/09/18)	JANUARY 16, 2018
	(SEE COVER SHEET FOR COMPLETE LIST OF PLAN REVISION)	
	PLAN ORIGINATION DATE	JUNE 24, 2016

PCSM NOTES & DETAILS

AS PART OF

CENTENNIAL APARTMENTS

PREPARED FOR

HOFF PROPERTIES, LLC

SITE SITUATE IN

SCHWENKSVILLE BOROUGH, MONTGOMERY COUNTY, PA

Richard C. Mast Associates, P.C.
Consulting Engineers and Surveyors
www.rcmaonline.com
The Village at Lederach
658 Harleysville Pike, Suite 150
Harleysville, PA 19438
(215) 513-2100

DRAFTED BY	PROJ. MNGR.	PROJECT NO.	DRAWING NO.
R.A.F.	D.B.C.	2800	14 OF 22

EARTHMOVING/BMP CONSTR. SEQUENCE

In order to keep erosion and sediment pollution during construction to an absolute minimum, the following procedures and stages shall be followed:

1. Sed. Trap #1 must remain, at a minimum, until all bulk grading and excavating is completed, the proposed building foundation is constructed, proposed storm run B1-B2 and temporary discharge pipe, proposed storm run B4-B5 and temporary discharge pipe, and, to the greatest extent possible, the proposed access drive/parking area.
2. INSTALL INITIAL E&S CONTROLS:
   - 2.1. (CRITICAL STAGE Contact licensed Professional) Install location markers for limit of disturbance, tree protection fencing, safety fencing (infiltration areas & berm), and filter barrier.
   - 2.2. Contractor to install, or cause to have installed, location markers for existing underground utilities crossing through the project site, including, but not limited to underground electric, water, sewer, and gas lines.
   - 2.3. Demo existing curb and install stone construction entrance from Forest Lane.
   - 2.4. Install filter socks FS-1, FS-2, & FS-3, tree protection fencing, water bar at construction entrance, and safety fence barrier around the proposed infiltration areas and berm.
   - 2.5. Install a Concrete Washout Station (see Figure 3.18).
3. PERFORM ALL NECESSARY FOUNDATION DEMOLITION, TREE/BRUSH CLEARING, AND GRUBBING. Clean acceptable fill may be reused onsite as permitted by Schwenksville Borough. Remove debris from the site in accordance with waste disposal regulations.
4. CONSTRUCT STORM C5-C2 AND SEDIMENT TRAP 1
   - 4.1. Strip and stockpile topsoil over proposed storm sewer. Install filter sock FS-4 below stockpile.
   - 4.2. Construct Storm C5-C2 using standard Trench Excavation Methods. Remove and replace Filter Barrier #2 as necessary to construct piping. Restore all disturbed areas immediately with permanent seed and mulch.
   - 4.3. Install inlet filters immediately over all inlets.
   - 4.4. Infiltration trench & Rain Garden BMPs (at Inlets C2 & C1) to be installed later.
   - 4.5. Strip and stockpile topsoil over trap area.
   - 4.6. Construct trap to temporary design grades including embankment (berm) and emergency spillway at temporary elevations. NOTE: Use caution to prevent compaction of soils over Infiltration Trench 1 BMP).
   - 4.7. Construct trap outfall pipe through berm and install temporary riser, skimmer, skimmer landing, dewatering device, clean-out stake, and spillway lining.
   - 4.8. Stabilize disturbed areas with slope erosion blanket and permanent seed.
5. IMMEDIATELY CONSTRUCT SWALE T1:
   - 5.1. Strip and stockpile topsoil over proposed swale.
   - 5.2. Construct Temp. Swale T1 to design subgrade.
   - 5.3. Stabilize with specified erosion blanket and temporary seed.
   - 5.4. Temp. Swale T1 to remain until the proposed building foundation is constructed, proposed storm run B1-B2 and temporary discharge pipe, proposed storm run B4-B5 and temporary discharge pipe, and, to the greatest extent possible, the proposed access drive/parking area.
6. PERFORM UNDERGROUND ELECTRIC SERVICE RELOCATION. Coordinate with electric service provider and complete existing underground electric line vertical relocation. All materials, construction methods, standards, and specifications as per electric service provider.
7. Bulk site grading and construction of proposed underground utilities and above-ground improvements may be completed concurrently.
8. PERFORM BULK CUTS/FILLS AND ROUGH GRADE PROJECT SITE:
   - 8.1. Strip and stockpile topsoil over project site. After topsoil is stripped and stockpiled, stabilize stockpile with temporary seed and mulch.
   - 8.2. Perform bulk cuts & fills, including rough grade driveway/parking area to design subgrade and excavation of proposed building foundation. Replace construction entrance stone and water bar as necessary during grading activities.
9. BEGIN CONSTRUCTION OF THE PROPOSED BUILDING FOUNDATION.
10. After electric service has been relocated, CONSTRUCT PROPOSED SANITARY SEWER MAIN AND PROPOSED POTABLE WATER MAIN. The locations of any stubs constructed short of the building shall be marked with a visual demarcation.
11. CONSTRUCT FOREST LANE PROPOSED IMPROVEMENTS:
   - 11.1. Widening improvements are to be completed such that areas are excavated to design subgrade and stabilized at the end of each work day with the compacted stone course.
   - 11.2. Sawcut existing edge of paving utilizing proper traffic controls.
   - 11.3. Construct storm A1-A2 and D3-D1.
   - 11.4. See Stream Diversion Sequence for construction of storm run D3-D1.
   - 11.5. Excavate proposed widening to design subgrade and stockpile (or use as fill) excavated materials.
   - 11.6. Finish grade widening and construct curbs.
   - 11.7. Install stone and macadam base courses within areas of widening.
12. CONSTRUCT STORM SEWERS:
   - 12.1. Construct Storm B1-B2 and temporary discharge pipe. Pipe flows to discharge overland into Inlet C4.
   - 12.2. Construct Storm B4-B5 and temporary discharge pipe.
   - 12.3. Construct soil diversion berms around Inlets B1, B2, B4, & B5 as necessary. Berms must prevent disturbed runoff from entering the completed system. Berms to remain until proposed access drive and parking area is constructed/functional and disturbed runoff is properly managed before entering completed inlets.
   - 12.4. Construct Storm B3-B3.1 and Underground Basin B and Storm B6-B6.1 and Underground Basin C as per details. Refer to detail for BMP specific construction staging and notes. Temporarily cover inlet grates to prevent sedimentation from overland flows. Ensure building roof drains are connected to basins as shown.
13. COMPLETE INTERNAL DRIVEWAY (to macadam base course):
   - 13.1. Sediment Trap to remain in place and functional to the greatest extent possible. The dewatering device and pumped filter bag may be used in place of the Sediment Trap on a short term basis to construct the western end of the parking area.
   - 13.2. Finish grade driveway/parking area for curb and sidewalk installation and construct curbs.
   - 13.3. Due to steep grades and limited space, the Stone Tire Cleaner shall remain until all earthwork is completed.
   - 13.4. Excavate collected sediment from trap, remove trap controls.
   - 13.5. Construct Storm C2-C1. Replace/install inlet protection at C1 and C2.
   - 13.6. Properly backfill trap area to parking area design subgrade with acceptable compacted fill.
   - 13.7. Install stone base course and bituminous base courses to parking area and driveway, except Tire Cleaner area.
   - 13.8. Install filter sock FS-5 along top-of-curb below embankment.
   - 13.9. Install inlet filters over all parking area inlets.
14. CONSTRUCT SIDEWALKS, TRASH REFUSE PAD, AND PAVILION. Stabilize disturbed areas.
15. (CRITICAL STAGE Contact licensed Professional) CONSTRUCT INFILTRATION TRENCH A AND INFILTRATION BERM AS PER DETAILS. See BMP specific staging. Stabilize disturbed areas. Install inlet filters immediately.
16. COMPLETE CONSTRUCTION OF ALL PROPOSED IMPROVEMENTS AND UTILITIES. (except Storm C2-C3, Storm C5-C6, and driveway entrance/Tire Cleaner area).
17. (CRITICAL STAGE Contact licensed Professional) APPLY AMENDED TOPSOIL MIXTURE TO ALL DESIGNATED AREAS AS PER DETAIL. Additional depth is recommended to ensure minimum depth is provided at the time of inspection. Stabilize all disturbed areas with permanent seed and mulch. Install slope matting as shown and as per PADEP specifications.
18. An area shall be considered to have achieved final stabilization when it has a minimum uniform 70% (percent) vegetative or other permanent non-vegetative cover with a density sufficient to resist accelerated surface erosion and subsurface characteristics sufficient to resist sliding and other movements.
19. Conservation District approval is required prior to removal of E&S Controls (refer to E&S Notes).
20. After final stabilization is achieved for the drainage area contributing to Underground Basins B & C, REMOVE TEMPORARY DISCHARGE PIPES AND CONSTRUCT STORM C2-C3 AND C5-C6. Replace amended topsoil over disturbed areas, finish grade, and stabilize with permanent seed and mulch. Backfill topsoil stockpile area with excavated material from rain garden.
21. (CRITICAL STAGE Contact licensed Professional) CONSTRUCT RAIN GARDEN AS PER DETAIL. See BMP specific staging. Backfill topsoil stockpile area with excavated material from rain garden. Stabilize disturbed areas. Install inlet filters immediately.
22. REMOVE THE SITE TIRE CLEANER AND COMPLETE DRIVEWAY ENTRANCE CONSTRUCTION TO PAVING BASE COURSE.
23. REMOVE REMAINING TEMPORARY EROSION CONTROL MEASURES AND DISTRIBUTE COLLECTED SEDIMENT TO AREA ADJACENT TO CONTROLS. All areas disturbed during removal of controls must be stabilized immediately.
24. RESTORE AND/OR REPAIR ALL PAVED DRIVEWAY BASE COURSES AS NECESSARY AND RESTORE ALL ITEMS AFFECTED BY CONSTRUCTION ACTIVITIES (I.E. SIGNS, MAILBOXES, ETC.). COMPLETE ALL MUNICIPAL INSPECTION AND PUNCHLIST ITEMS. INSTALL ALL REMAINING BITUMINOUS WEARING COURSES. INSTALL ALL PERMANENT SIGNAGE AND STRIPING. (CRITICAL STAGE Contact licensed Professional) INSTALL ALL REMAINING LANDSCAPING.
25. Upon permanent stabilization of earth disturbance activity under 25 PA. Code § 102.22(A)(2) (relating to permanent stabilization) and installation of BMPs in accordance with the approved plan prepared and implemented in accordance with 25 PA. Code § 102.4 and 102.8, the Permittee and/or Co-permittee shall submit a N.O.T. Notice Of Termination) to the PADEP or authorized Conservation District. The Permittee shall include with the N.O.T. the required record drawings with a final certification statement from a licensed professional.

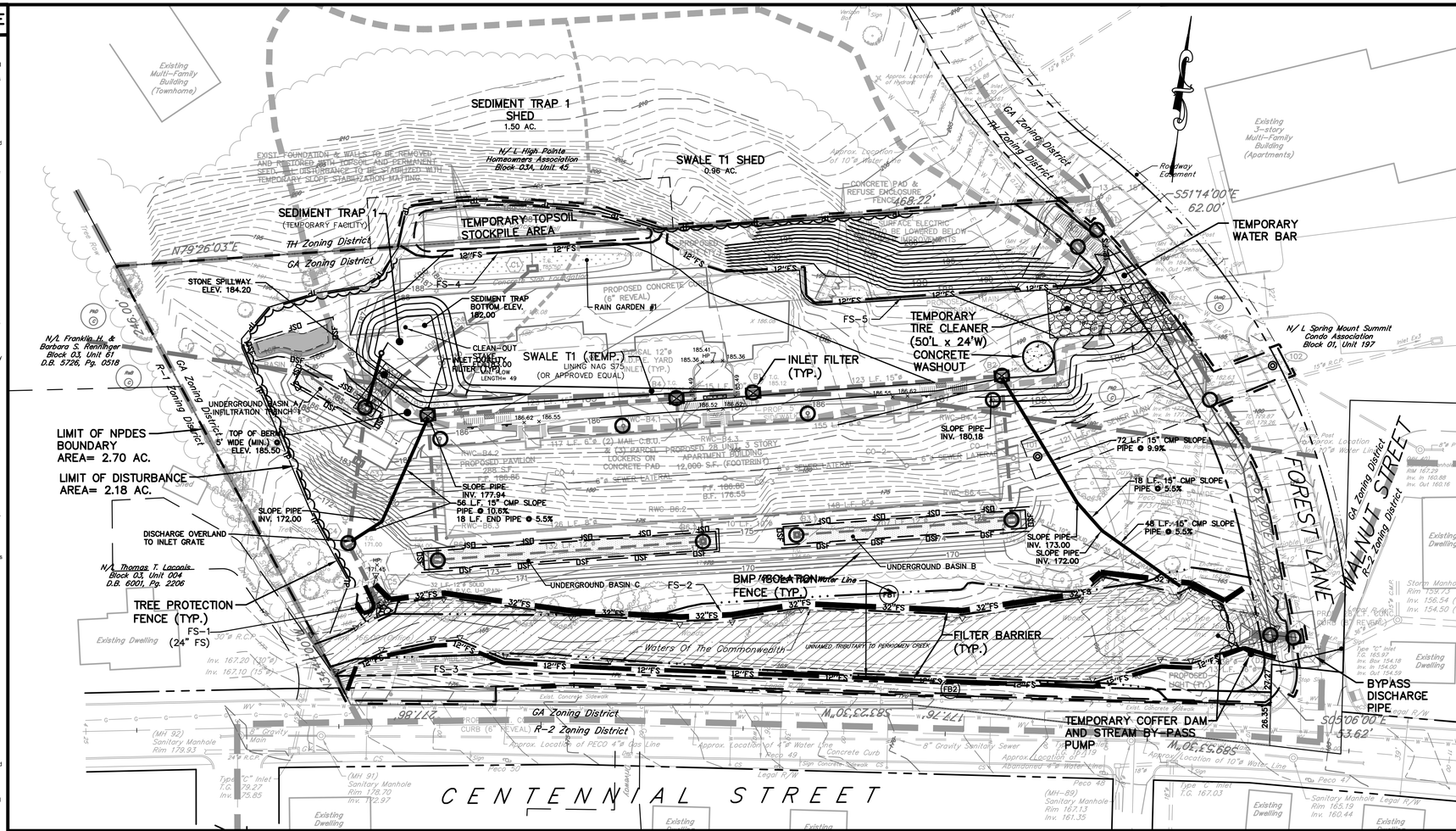

SITE LOCATION MAP

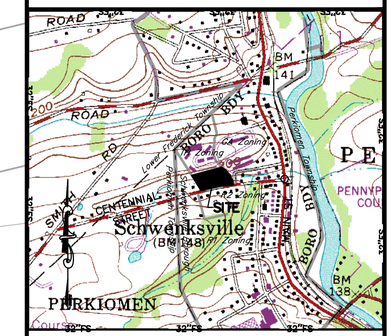

U.S.G.S. PERKIOMENVILLE QUADRANGLE 7.5' SERIES
SCALE: 1"=1000'

LEGEND

- ZONING
- PROPERTY BOUNDARY
- EXIST. CONTOUR
- EXIST. INDEX CONTOUR
- PROP. CONTOUR
- PROP. INDEX CONTOUR
- PROP. TEMPORARY CONTOUR
- PROP. TEMPOARY INDEX CONTOUR
- 12"FS — PROP. FILTER SOCK (WITH SIZE)
- PROP. LIMIT OF DISTURBANCE LINE
- PROP. NPDES BOUNDARY
- INDICATES SOILS BOUNDARY
- INDICATES MAJOR E&S BMP DRAINA
- INDICATES MINOR E&S BMP DRAINA
- CfA / C — INDICATES SOILS TYPE AND HYDROLOGIC GROUP
- TEMPORARY STOCKPILE AREA — TEMPORARY TOPSOIL STOCKPILE AREA
- WATERS OF THE COMMONWEALTH
- PROP. EROSION CONTROL BLANKET (NAG C125 OR APPROVED EQUAL)
- TEMPORARY SANDBAG COFFERDAM
- TEMPORARY CONCRETE WASHOUT AREA
- TEMPORARY TIRE CLEANER
- TEMPORARY INLET FILTER

STEEP SLOPE PROTECTION BLANKET

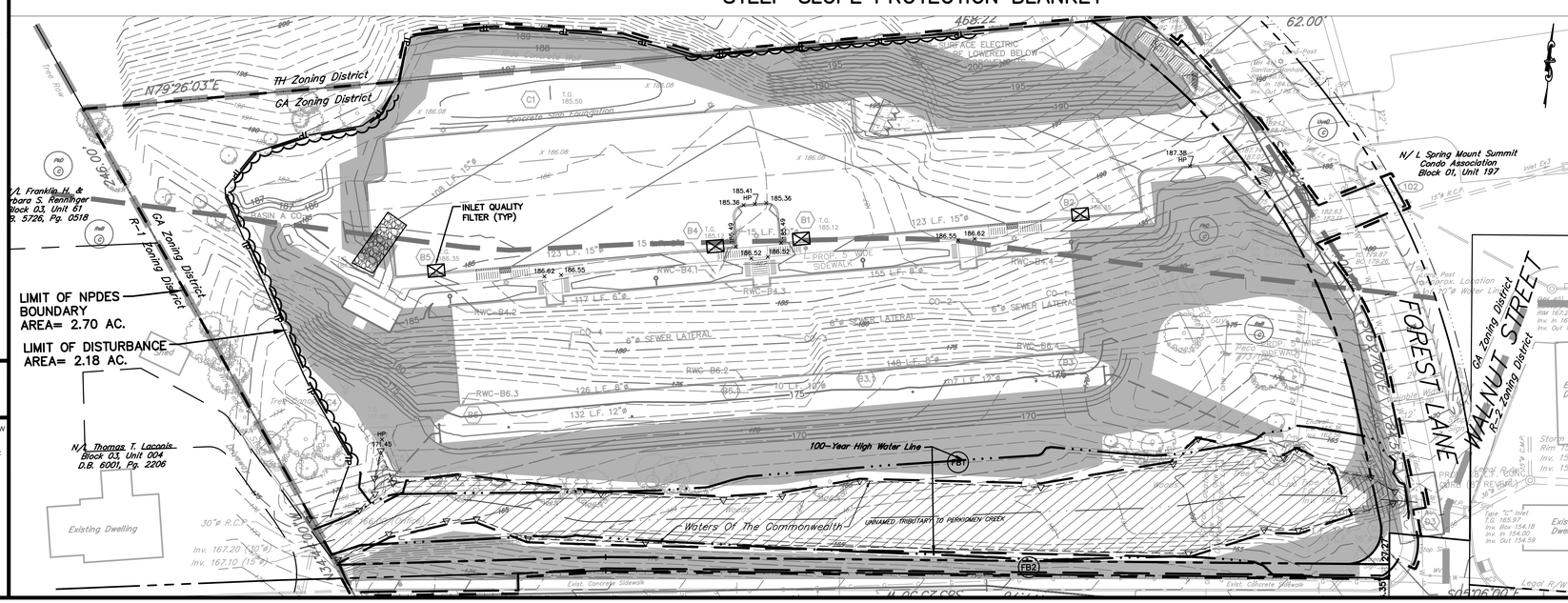

STREAM DIVERSION CONSTRUCTION SEQUENCE

NOTE: CONSTRUCTION OF STORM RUN D3 TO D1 SHALL TAKE PLACE DURING PERIODS OF NO FLOW OR LOW FLOW IN THE STREAM.

1. IF DRAINAGE CHANNEL IS FLOWING DURING THE TIME OF CONSTRUCTION, PLACE SANDBAGS OR OTHER SUITABLE DIVERSION DEVICE (I.E. INFLATABLE PORTABLE BLADDERS) TO A HEIGHT EQUIVALENT TO ONE (1) BAG ABOVE CHANNEL FLOW TO DIVERT FLOW AWAY FROM THE EXCAVATED AREA. CONSTRUCT TEMPORARY COFFERDAM AND INSTALL PUMP BYPASS SYSTEM. PUMP FLOW AROUND IN-CHANNEL WORK AREAS.
2. EXCAVATE ENTIRE CHANNEL AREA FOR PREPARATION AND PLACEMENT OF THE STORM RUN.
3. PREPARE STREAM BED AND PLACE STORM RUN STRUCTURES AND HEADWALL.
4. BACKFILL AND STABILIZE ALL EXPOSED EARTH AROUND HEADWALL.
5. REMOVE ALL DIVERSION DEVICES AND IMMEDIATELY STABILIZE ALL DISTURBED AREAS.
6. UPON COMPLETION OF STORM RUN CONSTRUCTION, ALL DISTURBED AREAS SHALL BE IMMEDIATELY BACKFILLED AND STABILIZED.

30 0 15 30 60 90
DRAWING SCALE: 1"=30'

THIS DRAWING IS NOT TO BE USED FOR CONSTRUCTION UNLESS STAMPED: "ISSUED FOR CONSTRUCTION"

No.	REVISION	DATE
11	REVISED PER BOROUGH EMAIL COMMENTS (10/09/18)	OCTOBER 24, 2018
10	REVISED PER BOROUGH EMAIL COMMENTS (07/06/18) & 07/09/18)	AUGUST 16, 2018
9	REVISED PER BOROUGH LTR. (12/20/17), SEWER AUTH. LTR. (01/31/18)	JUNE 5, 2018
8	REVISED PER MCCD TECHNICAL REVIEW (03/12/18)	MAY 4, 2018
7	REVISED PER MCCD ADMINISTRATIVE INCOMPLETENESS REVIEW (01/09/18)	JANUARY 16, 2018
	(SEE COVER SHEET FOR COMPLETE LIST OF PLAN REVISION)	
	PLAN ORIGINATION DATE	JUNE 24, 2016

EROSION AND SEDIMENTATION CONTROL PLAN

AS PART OF

CENTENNIAL APARTMENTS

PREPARED FOR

HOFF PROPERTIES, LLC

SITE SITUATE IN

SCHWENKSVILLE BOROUGH, MONTGOMERY COUNTY, PA

RICHARD C. MAST ASSOCIATES, P.C. — RCMA

Richard C. Mast Associates, P.C.
Consulting Engineers and Surveyors
www.rcmaonline.com

The Village at Lederach
658 Harleysville Pike, Suite 150
Harleysville, PA 19438
(215) 513-2100

DRAFTED BY	PROJ. MNGR.	PROJECT NO.	DRAWING NO.
R.A.F.	D.B.C.	2800	15 OF 22

EROSION CONTROL NOTES

General:

1.1. Earth disturbance activities for the project site has been planned and designed, to the extent practicable, in order to accomplish the following:

1.1.1. The E&S Plan will, to the extent practicable, *minimize the extent and duration of the earth disturbance* by minimizing the limit of disturbance to only those areas required for the planned development of the site and by sequencing construction activities, as specified in the E&S Plan, to minimize the duration of construction activities.

1.1.2. The E&S Plan will, to the extent practicable, *maximize protection of existing drainage features and vegetation* by minimizing the limit of disturbance to only those areas required for the planned development of the site and by minimizing disturbance of areas that may adversely affect existing site drainage features.

1.1.3. The E&S Plan will, to the extent practicable, *minimize soil compaction* by minimizing the limit of disturbance, and restricting construction activities and vehicles to within the limit of disturbance, to only those areas required for the planned development of the site.

1.1.4. The E&S Plan will, to the extent practicable, *utilize measures or controls that prevent or minimize the generation of increased stormwater runoff* by applying the guidelines presented in the PADEP Erosion and Sediment pollution Control Program Manual for the design of the proposed BMP's described in the E&S Plan.

1.2. All earth disturbances, including clearing and grubbing as well as cuts and fills shall be done in accordance with the approved E&S plan. A copy of the approved drawings (stamped, signed and dated by the reviewing agency) must be available at the project site at all times. The reviewing agency shall be notified of any changes to the approved plan prior to implementation of those changes. The reviewing agency may require a written submittal of those changes for review and approval at its discretion.

1.3. At least 7 days prior to starting any earthmoving activities, including clearing and grubbing, the owner and/or operator shall invite all contractors, the landowner, appropriate municipal officials, the E&S plan preparer, the PCSM plan preparer, the licensed professional responsible for oversight of critical stages of implementation of the PCSM plan, and a representative from the local conversation district to an on-site preconstruction meeting.

1.4. Upon installation or stabilization of all perimeter sediment control BMPs and at least three (3) days prior to proceeding with the bulk earth disturbance activities, the Permittee or Co-permittee shall provide notification to the PADEP or authorized County Conservation District.

1.5. At least 3 days prior to starting any earth disturbance activities, or expanding into an area previously unmarked, the Pennsylvania One Call System, Inc. shall be notified at 1-800-242-1776 for the location of existing underground utilities.

1.6. All earth disturbance activities shall proceed in accordance with the sequence provided on the plan drawings. Deviation from the sequence must be approved by the local conservation district or by the PADEP prior to implementation. Each step of the sequence shall be completed before proceeding to the next step, except where noted.

1.7. Clearing, grubbing, and topsoil stripping shall be limited to those areas described in each stage of the construction sequence. General site clearing, grubbing and topsoil stripping may not commence in any stage or phase of the project until E&S BMPs specified by the BMP sequence for that stage or phase have been installed and are functioning as described in this E&S plan. These areas must be clearly marked and fenced off before clearing and grubbing operation begin.

1.8. Topsoil required for the establishment of vegetation shall be stockpiled at the location(s) shown on the plan map(s) in the amount necessary to complete the finish grading of all exposed areas that are to be stabilized by vegetation. Each stockpile shall be protected in the manner shown on the plan drawings. Stockpile height shall not exceed 35 feet. Stockpile slopes shall be 2H:1V or flatter.

1.9. Immediately upon discovering unforeseen circumstances posing the potential for accelerated erosion and/or sediment pollution, the operator shall implement appropriate best management practices to minimize the potential for erosion and sediment pollution and notify the local conservation district and/or regional office of the PADEP.

1.10. All off-site waste and borrow areas must have an E&S plan approved by the local conservation district or the PADEP fully implemented prior to being activated.

1.11. All pumping of water from any work area shall be done according to the procedure described in this plan, over undisturbed vegetated areas. All water pumped from a disturbed area must be treated for sediment removal prior to discharging to a surface water. Pumped water may be discharged through a properly functioning sediment trap or sediment basin or through a sediment control BMP such as a pumped water filter bag.

1.12. A Rock Construction Entrance shall be installed wherever it is known that construction vehicles will be exiting onto a roadway (public or private).

1.13. Sediment tracked onto any public roadway or sidewalk shall be returned to the construction site immediately and disposed of in the manner described in this plan. In no case shall the sediment be washed, shoveled, or swept into any roadside ditch, storm sewer, or surface water.

1.14. Areas which are to be topsoiled shall be scarified to a minimum depth of 3 to 5 inches, 6 to 12 inches on compacted soils, prior to placement of topsoil. Areas to be vegetated shall have a minimum 6 inches of topsoil in place prior to seeding and mulching. Fill outslopes shall have a minimum of 2 inches of topsoil.

1.15. Seeps or springs encountered during construction shall be handled in accordance with the standard and specification for subsurface drain of other approved method.

1.16. E&S BMPs shall remain functional as such until all areas tributary to them are permanently stabilized or until they are replaced by another BMP approved by the local conservation district or the PADEP.

1.17. Upon completion of all earth disturbance activities and permanent stabilization of all disturbed areas, the owner and/or operator shall contact the local conservation district for an inspection prior to removal/conversion of primary E&S BMPs.

1.18. After final site stabilization has been achieved, temporary E&S BMPs must be removed or converted to PCSM BMPs. Areas disturbed during removal or conversion of the BMPs shall be stabilized immediately. In order to ensure rapid revegetation of disturbed areas, such removal/conversions are to be done only during the germinating season.

1.19. Upon completion of all earth disturbance activities and permanent stabilization of all disturbed areas, the owner and/or operator shall contact the local conservation district to schedule a final inspection.

1.20. Failure to correctly install E&S BMPs, failure to prevent sediment-laden runoff from leaving the construction site, or failure to take immediate corrective action to resolve failure of E&S BMPs may result in administrative, civil and/or criminal penalties being instituted by the PADEP as defined in Section 602 of the Pennsylvania Clean Streams Law. The Clean Streams Law provides for up to $10,000 per civil penalties, up to $10,000 in summary criminal penalties, and up to $25,000 in misdemeanor criminal penalties for each violation.

2. BMP Maintenance and Monitoring:

2.1. Until the site is stabilized, all E&S BMPs shall be maintained properly. Maintenance shall include inspections of all E&S BMPs after each runoff event and on a weekly basis. All preventative and remedial maintenance work, including clean out, repair, replacement, regrading, reseeding, remulching and renetting must be performed immediately. If E&S BMPs fail to perform as expected, replacement BMPs, or modifications of those installed will be required.

2.2. A log showing dates that E&S BMPs were inspected as well as any deficiencies found and the date they were corrected shall be maintained on the site and be made available to regulatory agency officials at the time of inspection.

2.3. Maintain all erosion control facilities through the working period of each area. Contractor shall remove accumulated sediment to maintain effectiveness of erosion control facilities when capacity is reduced by a maximum of 25 %.

2.4. All sediment removed from BMPs shall be disposed of in the manner described on the plan drawings. Sediment removed from BMPs shall be disposed of in landscape areas outside of steep slopes, wetlands, floodplains or drainage swales and immediately stabilized, or placed in topsoil stockpiles.

2.5. Stormwater inlets must be protected until the tributary areas are stabilized. Sediment must be removed from stormwater inlet protection after each runoff event. The use of mastic or equivalent is recomended in all inlets located within grassed areas and PCSM BMP areas to prevent soil from migrating into the storm sewer or infiltration area through unsealed joints in the box and top.

2.6. Sediment must be removed from silt fence/silt sock whenever accumulated sediment reaches ½ above ground height of silt fencing/silt sock. Any silt fencing/silt sock, which has been undermined or topped, shall be replaced with rock filter outlets immediately.

3. Receiving Surface Waters:

3.1. The site is located within the Perkiomen Creek Watershed (Main Stem, Green Lane Reservoir Dam to Mouth). Runoff from the project site drains into an un-named tributary to the Perkiomen Creek (reach 02040203003140). The classification pursuant to Chapter 93 and the Statewide Designated Use Listing are: TSF, MF. The Perkiomen Creek is not impaired according to Category 4 or 5 of the current Integrated Water Quality Monitoring and Assessment Report.

4. Construction Vehicles:

4.1. At no time shall construction vehicles be allowed to enter the areas outside the limit of disturbance boundaries shown on the plan maps. These areas must be clearly marked and fenced off before clearing and grubbing operations begin.

4.2. Construction vehicles must exit the site through an installed Rock Construction Entrance. Construction vehicles are prohibited from exiting the site through any other access way.

5. Recycling and Disposal of Waste Materials:

5.1. All building materials and wastes must be removed from the site and recycled or disposed of in accordance with the Department's Solid Waste Management Regulations at 25 Pa. Code Ch. 260a (relating to hazardous waste management system: general), Ch. 271 (relating to municipal waste management system - general provisions), and Ch. 287 (relating to residual waste management system - general provisions). No building materials or wastes or unused building materials shall be burned, buried, dumped, or discharged at the site.

5.2. Anticipated construction/demolition waste materials from the project include the following: E&S BMP materials, wood, plaster, metals, asphaltic substances, bricks, block and unsegregated concrete.

5.3. Under no circumstances may E&S BMPs be used for temporary storage of demolition materials or construction wastes.

6.3. All sediment removed from BMPs shall be disposed of in the manner described on the plan drawings.

6.4. Trash is to be disposed of properly and recycled when possible.

6.5. Concrete Washout: A suitable washout facility must be provided for the cleaning of chutes, mixers, and hoppers of the concrete delivery vehicles. Under no circumstances may wash water from these vehicles be allowed to enter any surface waters

7. Fill Material:

7.1. The contractor is responsible for ensuring that any material brought on the site is clean fill. Form FP-001 must be retained by the property owner for any fill material affected by a spill or release of a regulated substance but qualifying as clean fill due to analytical testing.

7.2. Clean Fill is defined as: Uncontaminated, non-water soluble, non-decomposable, inert, solid material to include soil, rock, stone, dredged material, used asphalt, and brick, block or concrete from construction and demolition activities that is separate from other waste and is recognizable as such. The term does not include materials placed in or on the waters of the Commonwealth unless otherwise authorized. The term "used asphalt" does not include milled asphalt or asphalt that has been processed for re-use.

7.3. Environmental due diligence: The applicant must perform environmental due diligence to determine if the fill materials associated with the project qualify as clean fill. Environmental due diligence is defined as: Investigative techniques, including, but not limited to, visual property inspections, electronic data base searches, review of property ownership, review of property use history, Sanborn maps, environmental questionnaires, transaction screens, analytical testing, environmental assessments or audits. Analytical testing is not a required part of due diligence unless visual inspection and/or review of the past land use of the property indicates that the fill may have been subjected to a spill or release of regulated substance. If the fill may have been affected by a spill or release of a regulated substance, it must be tested to determine if it qualifies as clean fill. Testing should be performed in accordance with Appendix A of the Department's policy "Management of Fill."

7.4. Fill material that does not qualify as clean fill is regulated fill. Regulated fill is waste and must be managed in accordance with the Department's municipal or residual waste regulations based on 25 Pa. Code Chapters 287 Residual Waste Management or 271 Municipal Waste Management, whichever is applicable. These regulations are available on-line at www.pacode.com.

8. Fill Areas:

8.1. Areas to be filled are to be cleared, grubbed, and stripped of topsoil to remove trees, vegetation, roots and other objectionable material.

8.2. All fills shall be compacted as required to reduce erosion, slippage, settlement, subsidence or other related problems. Fill intended to support buildings, structures and conduits, etc. shall be compacted in accordance with local requirements and codes.

8.3. All earthen fills shall be placed in compacted layers not to exceed 9 inches in thickness unless otherwise noted.

8.4. Fill materials shall be free of frozen particles, brush, roots, sod, or foreign or objectionable materials that would interfere with or prevent construction of satisfactory fills.

8.5. Frozen materials of soft, mucky, or highly compressible materials shall not be incorporated into fills.

8.6. Fill shall not be placed on saturated or frozen surfaces.

9. Temporary Stabilization and Permanent Stabilization:

9.1. Immediately after earth disturbance activities cease in any area or subarea of the project, the operator shall stabilize all disturbed areas. During non-germinating months, mulch or protective blanketing shall be applied as described in the plan. Areas not at finished grade, which will be reactivated within 1 year, may be stabilized in accordance with the temporary stabilization specifications. Those areas which will not be reactivated within one 1 year shall be stabilized in accordance with the permanent stabilization specifications.

9.2. Upon completion or temporary cessation of the earth disturbance activity in a special protection watershed, that portion of the project site tributary to the special protection waters must be immediately stabilized. In all other watersheds, cessation of activity for at least 4 days requires temporary stabilization.

9.3. All graded areas shall be permanently stabilized immediately upon reaching finished grade. In no case should an area exceeding 15,000 square feet, which is to be stabilized by vegetation, reach final grade without being seeded and mulched. Cut slopes in competent bedrock and rock fills need not be vegetated. Seeded areas within 50 feet of a surface water, or as otherwise shown on the plan drawings, shall be blanked according to the standards of this plan.

9.4. Permanent stabilization is defined as a minimum uniform, perennial 70% vegetative cover or other permanent non-vegetative cover with a density sufficient to resist accelerated erosion. Cut and fill slopes shall be capable of resisting failure due to slumping, sliding, or other movements.

9.5. Temporary seed mix: 100% Annual ryegrass (98% purity, 90% germination). Apply at a rate of 50 lbs/acre.

9.6. Permanent seeding mix (minimum requirement - refer to the Landscape Plan for additional seeding specifications):

a)a) Lawn and swale areas: 20% Perennial Ryegrass mixture, a combination of improved certified varieties with no one variety exceeding 50% of the total (98% purity, 90% germination, applied at 20 lbs/acre), 30% Pennlawn Red Fescue (98% purity, 85% germination, applied at 30 lbs/acre), 50% Kentucky Bluegrass mixture, a mixture of improved certified varieties with no one variety exceeding 25% of the total (98% purity, 80% germination, applied at 55 lbs/acre).

a)b) Non-mowed areas: 70% Tall Fescue (98% purity, 85% germination applied at 73 lbs/acre), 30% Creeping Red Fescue or Chewings Fescue (98% purity, 85% germination applied at 30 lbs/acre).

51.7. In the absence of a soil test, apply agricultural limestone at a rate of 240 lbs/1000 sf and fertilizer (10-20-20) at a rate of 25 lbs/1000 sf per acre for permanent stabilization and apply agricultural limestone at a rate of 40 lbs/1000 sf and fertilizer (10-10-20) at a rate of 12.5 lbs/1000 sf per acre for temporary stabilization. Fertilizer and limestone shall be worked into the soil to a depth of approximately one inch and the surface rolled. Permanent vegetation should be established at the earliest possible date. Watering, mowing and fertilizing programs shall be continued until vegetative cover is well established.

51.8. Straw or hay mulch, at the rate of 3.0 tons/acres, must be applied in conjunction with all temporary and permanent seeding activities. Straw mulch should be applied in long strands, not chopped or finely broken. Mulch shall be applied immediately after seeding and shall be anchored, crimped or tackified immediately after application to prevent being windblown.

51.9. Mulch held in place with netting shall be installed on slopes of 8% or steeper. Erosion Control Blankets shall be used on slopes that are 3H:1V or steeper and where potential exists for sediment pollution to receiving waters.

51.10. Diversions, channels, sediment basins, sediment traps and stockpiles must be stabilized immediately.

52. Utility Line Trench Excavation:

52.1. Limit advance clearing and grubbing operations to a distance equal to two times the length of pipe installation that can be completed in one day.

52.2. Work crews and equipment for trenching, placement of pipe, plug construction and backfilling will be self contained and separate from clearing and grubbing and site restoration and stabilization operations.

52.3. All soil excavated from the trench will be placed on the uphill side of the trench.

52.4. Limit daily trench excavation to the length of pipe placement, plug installation and backfilling that can be completed the same day. Daily backfilling of the trench may be delayed for a maximum of six days for certain cases requiring testing of the installed pipe.

52.5. Water that accumulates in the open trench will be completely removed by pumping before pipe placement and/or backfilling begins. Water removed from the trench shall be pumped through a filtration device.

52.6. On the day following pipe placement and trench backfilling, the disturbed area will be graded to final contours and immediately stabilized.

52.7. Soils excavated from existing surface layer should be stockpiled separately and returned as final surface layer following trench backfilling.

53. Sod:

53.1. Sod shall be the same as the seed mix, and shall be machine cut at a uniform soil thickness of 3/4", plus or minus 1/4", at the time of cutting. Measurement for thickness shall exclude top growth and thatch. Sod shall be harvested, delivered and installed within a period of 36 hours.

53.2. During periods of excessively high temperature or in areas having dry subsoil, the subsoil shall be lightly irrigated immediately prior to laying the sod. The first row of sod shall be laid in a straight line with subsequent rows placed parallel to and tightly wedged against each other. Lateral joints shall be staggered to promote more uniform growth and strength. Ensure that sod is not stretched or overlapped and that all joints are butted tight in order to prevent voids that would cause air-drying of the roots. Wherever possible, sod shall be laid with the long edges parallel to the contours. Sod shall be rolled and tamped, pegged or otherwise secured to prevent slippage on slopes and to ensure solid contact between sod roots and the underlying soil surface. Sod shall be watered immediately following rolling or tamping until the underside of the new sod pad and soil surface below the sod is thoroughly wet. The operations of laying, tamping and irrigating for any piece of sod shall be completed within eight hours.

53.3. In the absence of adequate rainfall, watering shall be performed daily or as often as necessary during the first week and in sufficient quantities to maintain moist soil to a depth of 4". After the first week, sod watering is required as necessary to maintain adequate moisture content.

54. Soil Information:

54.1. Soil information for the site was obtained from the US Department of Agriculture, Natural Resources Conservation Service Web Soil Survey website.

PkD Penn-Klinesville channery silt loam, 15 to 25 percent slopes

ReB Readington silt loam, 3 to 8 percent slopes

54.1. Refer to the E&S Narrative for information on the type, depth, slope, physical characteristics, use limitations and resolutions for use limitations of the delineated soils.

55. Thermal Impacts

55.1. During earthmoving activities disturbed areas will be temporarily seeded and mulched to minimize the rate of runoff from the project site. Impacts are minimized by filtering the surface water through the filter socks. Existing areas adjacent to the natural flow path through the site will be preserved which will serve to reduce thermal impacts.

MONITORING, INSPECTION, AND REPORTING REQUIREMENTS

VISUAL INSPECTIONS:

1. The permittee and co_permittee(s) must ensure that visual site inspections are conducted weekly, and within 24 hours after each measurable rainfall event throughout the duration of construction and until the receipt and acknowledgement of the NOT by the department or authorized conservation district. The visual site inspections and reports shall be completed in a format provided by the department, and conducted by qualified personnel, trained and experienced in erosion and sediment control, to ascertain that E&S BMPs and PCSM BMPs are properly constructed and maintained to effectively minimize pollution to the waters of this commonwealth. A written report of each inspection shall be kept and include at a minimum:

1.1. A summary of site conditions, E&S BMP and PCSM BMP, implementation and maintenance and compliance actions; and

1.2. The date, time, name and signature of the person conducting the inspection.

NONCOMPLIANCE REPORTING

2. Where E&S, PCSM or PPC BMPs are found to be inoperative or ineffective during an inspection, or any other time, the permittee and co_permittee(s) shall, within 24 hours, contact the department or authorized conservation district, by phone or personal contact, followed by the submission of a written report within 5 days of the initial contact. Noncompliance reports shall include the following information:

2.1. Any condition on the project site which may endanger public health, safety, or the environment, or involve incidents which cause or threaten pollution;

2.2. The period of noncompliance, including exact dates and times and/or anticipated time when the activity will return to compliance;

2.3. Steps being taken to reduce, eliminate, and prevent recurrence of the noncompliance; and

2.4. The date or schedule of dates, and identifying remedies for correcting noncompliance conditions.

REDUCTION, LOSS, OR FAILURE OF THE BMPS

3. Upon reduction, loss, or failure of the BMPs, the permittee and co_permittee shall take immediate action to restore the BMPs or provide an alternative method of treatment. Such restored BMPs or alternative treatment shall be at least as effective as the original BMPs.

TERMINATION OF COVERAGE:

4. NOT: Upon permanent stabilization of earth disturbance activities associated with construction activity that are authorized by this permit and when BMPs identified in the PCSM Plan have been properly installed, the permittee and/or co_permittee of the facility must submit a NOT form that is signed in accordance with Part B, Section 1.c, Signatory Requirements, of this permit. All letters certifying discharge termination are to be sent to the department or authorized conservation district. The NOT must contain the following information: facility name, address, and location, operator name and address, permit number, identification and proof of acknowledgment from the person(s) who will be responsible for operation and maintenance of the PCSM BMPs in accordance with the approved PCSM Plan, and the reason for permit termination. Until the permittee has received written acknowledgement of the NOT, the permittee will remain responsible for operating and maintaining all E&S BMPs and PCSM BMPs on the project site and will be responsible for violations occurring on the project site.

COMPLETION CERTIFICATE AND FINAL PLANS

5. Within 30 days after the completion of earth disturbance activities authorized by this permit, including the permanent stabilization of the site and proper installation of PCSM BMPs in accordance with the approved PCSM Plan, or upon submission of the NOT if sooner, the permittee shall file with the department or authorized conservation district a statement signed by a licensed professional and by the permittee certifying that work has been performed in accordance with the terms and conditions of this permit and the approved E&S and PCSM Plans.

STANDARD CONSTRUCTION DETAIL # 7-1
Skimmer

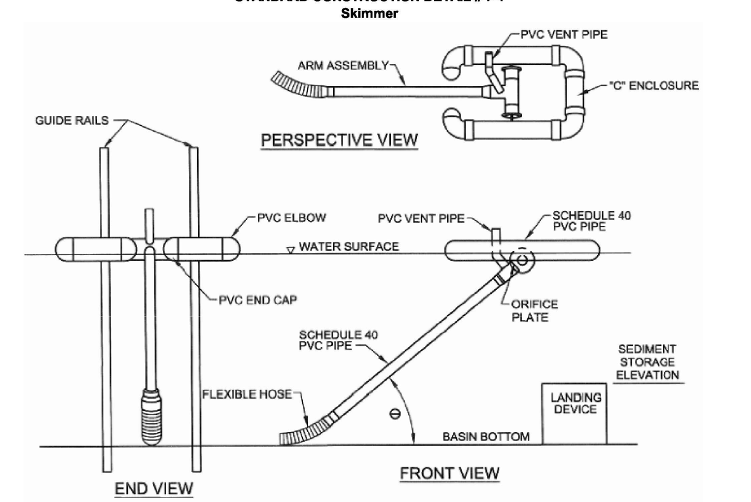

Adapted from Penn State Agricultural and Biological fact Sheet F-253

Basin No.	Water Surface Elevation (ft)	Arm Length (ft)	Arm Dia. (in)	Orifice Size* (in)	Top of Landing Device Elevation (ft)	Flexible Hose Length (in)	Flexible Hose Attachment Elevation (ft)
1	184.20	8	1.5	0.75	183.00	24	182.00

*** Must be equal to or less than arm diameter**

A rope shall be attached to the skimmer arm to facilitate access to the skimmer once installed.

Skimmer shall be inspected weekly and after each runoff event.

Any malfunctioning skimmer shall be repaired or replaced within 24 hours of inspection.

Ice or sediment buildup around the principal spillway shall be removed so as to allow the skimmer to respond to fluctuating water elevations.

Sediment shall be removed from the basin when it reaches the level marked on the sediment clean-out stake or the top of the landing device.

A semi-circular landing zone may be substituted for the guide rails (Standard Construction Detail # 7-3).

363-2134-008 / March 31, 2012 / Page 167

STANDARD CONSTRUCTION DETAIL # 7-2
Skimmer Attached to a Permanent Riser

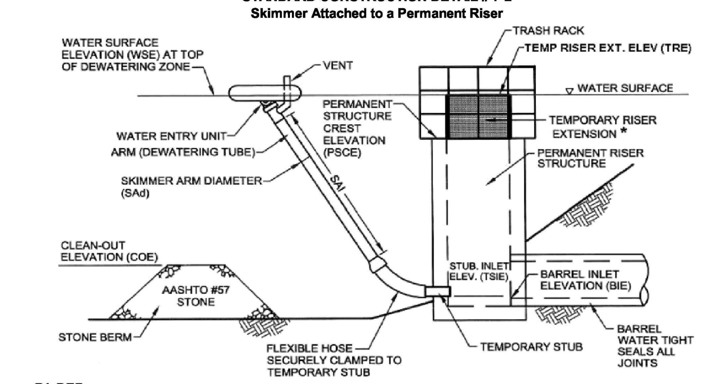

PA DEP

BASIN NO.	WATER SURFACE ELEV. WSE (FT)	ORIFICE DIA (IN)	ORIFICE HEAD (FT)	ARM DIA SAd (IN)	ARM LENGTH SAI (FT)	MAT'L	FLEXIBLE HOSE DIA (IN)	FLEXIBLE HOSE LENGTH (FT)	FLEXIBLE HOSE MAT'L
1	184.20	0.75	1.5	1.5	8	Sch 40 PVC	1.5	24	HDPE

(SKIMMER: ORIFICE, ARM, FLEXIBLE HOSE)

TEMPORARY STUB INSIDE DIA (IN)	TEMPORARY STUB INVERT ELEV. TSIE (FT)	TEMPORARY STUB MAT'L	PERMANENT RISER CREST ELEV. PSCE (FT)	PERMANENT RISER HORIZ OPENING LENGTH EI (IN)	PERMANENT RISER HORIZ OPENING WIDTH Ew (IN)	RISER EXTENSION CREST ELEV. TRE (FT)	RISER EXTENSION HORIZ OPENING LENGTH (IN)	RISER EXTENSION HORIZ OPENING WIDTH (IN)	BARREL INLET ELEV. BIE (FT)
0.8	182.00	Sch 40 PVC	185.20	42.3	21.0	N/A	N/A	N/A	182.00

All orifices on permanent riser below temporary riser extension shall have water-tight temporary seals provided. Temporary stub invert elevation shall be set at or below sediment clean-out elevation.

A rope shall be attached to the skimmer arm to facilitate access to the skimmer once installed. Skimmer shall be inspected weekly and after each runoff event.

Any malfunctioning skimmer shall be repaired or replaced within 24 hours of inspection.

Ice or sediment buildup around the principal spillway shall be removed so as to allow the skimmer to respond to fluctuating water elevations.

Sediment shall be removed from the basin when it reaches the level marked on the sediment clean-out stake or the top of the stone berm. See Standard Construction Detail # 7-3 for configuration of stone berm.

363-2134-008 / March 31, 2012 / Page 168

STANDARD CONSTRUCTION DETAIL # 8-3
Sediment Trap Temporary Riser

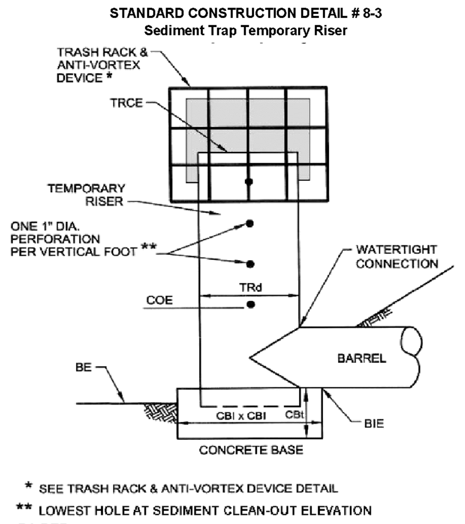

* SEE TRASH RACK & ANTI-VORTEX DEVICE DETAIL
** LOWEST HOLE AT SEDIMENT CLEAN-OUT ELEVATION
PA DEP

TRAP NO.	TEMPORARY RISER DIA TRd (IN)	CREST ELEV. TRCE (FT)	MAT'L	CLEAN OUT ELEV. COE (FT)	CONCRETE BASE LENGTH CBI (IN)	WIDTH CBw (IN)	THICKNESS CBt (IN)	BARREL INLET ELEV. BIE (FT)
1	18	185.20	CMP	183.00	38	38	18	182.00

Clogged or damaged spillways shall be repaired immediately. Trash and other debris from the trap and riser shall be removed.

Place a minimum of 2 #8 rebar at right angles and projecting through sides of riser to anchor it to concrete base. Rebar shall project a minimum of 1/4 riser diameter beyond outside of riser.

Concrete base shall be poured in such a manner as to insure that concrete fills bottom of riser to invert of the outlet pipe to prevent riser from breaking away from the base. Minimum base width equals 2 times riser diameter.

Embedded section of aluminum or aluminized pipe shall be painted with zinc chromate or equivalent.

363-2134-008 / March 31, 2012 / Page 220

STANDARD CONSTRUCTION DETAIL # 7-4
Sediment Basin Embankment and Spillway Details - Skimmer

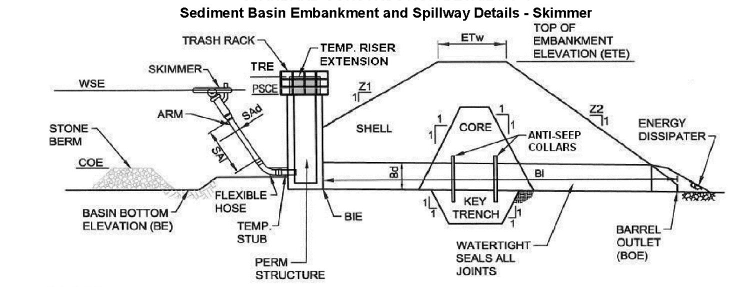

PA DEP

BASIN NO.	Z1 (FT)	Z2 (FT)	TEMP RISER EXT. ELEV. TRE	EMBANKMENT TOP ELEV ETE (FT)	TOP WIDTH ETw (FT)	KEY TRENCH DEPTH (FT)	KEY TRENCH WIDTH (FT)	CLEAN OUT ELEV COE (FT)	BOTTOM ELEV BE (FT)
1	3	3	N/A	185.50	5.0	n/a	n/a	183.00	182.00

SKIMMER DIA SAd (IN)	LENGTH SAI (FT)	MAT'L	OUTLET BARREL DIA Bd (IN)	INLET ELEV. BIE (FT)	MAT'L	LENGTH BI (FT)	OUTLET ELEV BOE (FT)
1.5	8	Sch 40 PVC	15	182.00	CMP	26	179.50

Sediment basins, including all appurtenant works, shall be constructed to the detail and dimensions shown on the E&S plan drawings.
Area under embankment shall be cleared, grubbed, and stripped of topsoil to a depth of two feet prior to any placement and compaction of earthen fill. In order to facilitate maintenance and restoration, the pool area shall be cleared of all brush, trees, and objectionable material. Fill material for the embankments shall be free of roots, or other woody vegetation, organic material, large stones, and other objectionable materials. The embankment shall be compacted in layered lifts of not more than 6" to 9". The maximum rock size shall be no greater than 2/3 the lift thickness.
Upon completion, the embankment shall be seeded, mulched, blanketed or otherwise stabilized according to the specifications of the E&S plan drawings. Trees shall not be planted on the embankment.
Inspect all sediment basins on at least a weekly basis and after each runoff event. Provide access for sediment removal and other required maintenance activities. A clean out stake shall be placed near the center of each basin. Accumulated sediment shall be removed when it has reached the clean out elevation on the stake and the basin restored to its original dimensions. Dispose of materials removed from the basin in the manner described in the E&S plan.
Basin embankments, spillways, and outlets shall be inspected for erosion, piping and settlement. Necessary repairs shall be immediately. Displaced riprap within the outlet energy dissipater shall be replaced immediately.

363-2134-008 / March 31, 2012 / Page 171

Accumulated sediment shall be removed and disturbed areas shall be stabilized inside the basin before conversion to a stormwater management facility. The device shown in Standard Construction Detail #7-16 may be used to dewater saturated sediment prior to its removal. Rock filters shall be added as necessary.

STANDARD CONSTRUCTION DETAIL # 6-5
Temporary Slope Pipe

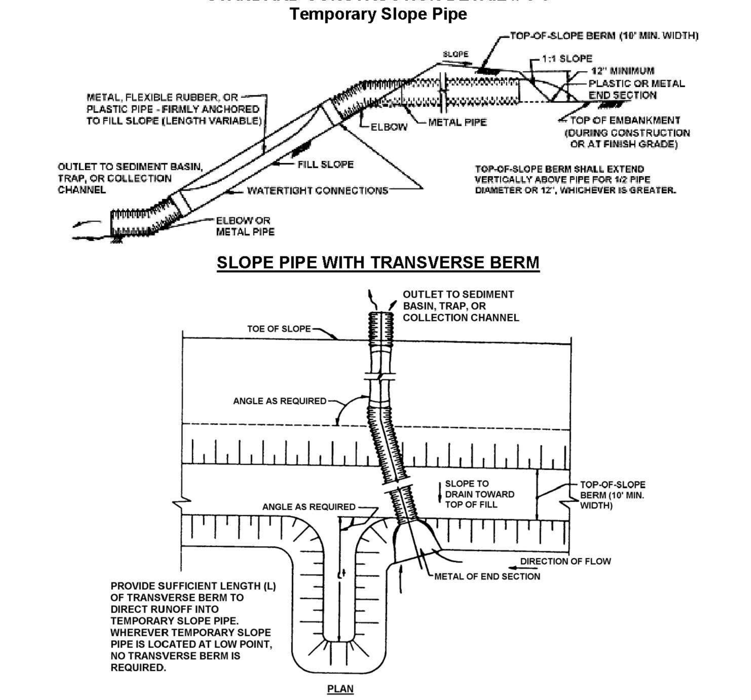

Adapted from PennDOT RC70, April 2004

NOTE: This table is intentionally blank and should be filled in by the plan preparer.

Slope Pipe No.	Outlet Protection Type	R-size or Material	Apron Length (ft)	Apron Width (ft)

The maximum distance between anchor stakes shall be 10 feet.

Transverse berm shall be used whenever temporary slope pipe is not located at low point.

Slope pipes shall be inspected weekly and after each runoff event. Any accumulated sediment shall be removed from the inlet immediately.

Damaged pipe sections shall be replaced within 24 hours. Leaking connections shall be repaired immediately.

STANDARD CONSTRUCTION DETAIL # 4-15
Filter Bag Inlet Protection - Type C Inlet

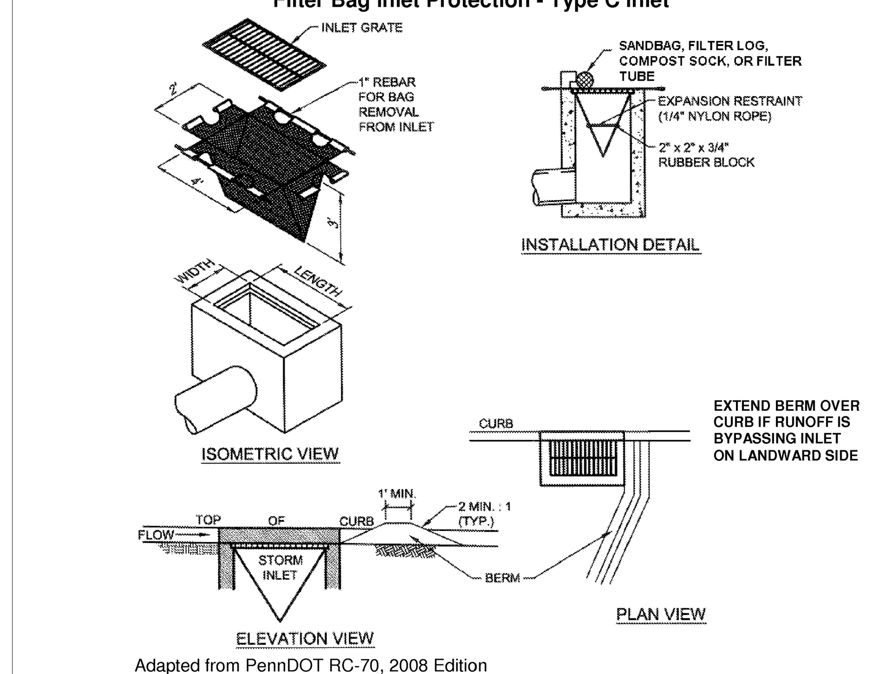

Adapted from PennDOT RC-70, 2008 Edition

Maximum drainage area = ½ acre.

Inlet protection shall not be required for inlet tributary to sediment basin or trap. Berms shall be required for all installations.

Rolled earthen berm shall be maintained until roadway is stoned. Road subbase berm shall be maintained until roadway is paved. Six inch minimum height asphalt berm shall be maintained until roadway surface receives final coat.

At a minimum, the fabric shall have a minimum grab tensile strength of 120 lbs, a minimum burst strength of 200 psi, and a minimum trapezoidal tear strength of 50 lbs. Filter bags shall be capable of trapping all particles not passing a No. 40 Sieve.

Inlet filter bags shall be inspected on a weekly basis and after each runoff event. Bags shall be emptied and rinsed or replaced when half full or when flow capacity has been reduced so as to cause flooding or bypassing of the inlet. Damaged or clogged bags shall be replaced. A supply shall be maintained on site for replacement of bags. All needed repairs shall be initiated immediately after the inspection. Dispose of accumulated sediment as well as all used bags according to the plan notes.

DO NOT USE ON MAJOR PAVED ROADWAYS WHERE PONDING MAY CAUSE TRAFFIC HAZARDS.

STANDARD CONSTRUCTION DETAIL # 4-19
Stone Inlet Protection and Berm - Type C Inlet

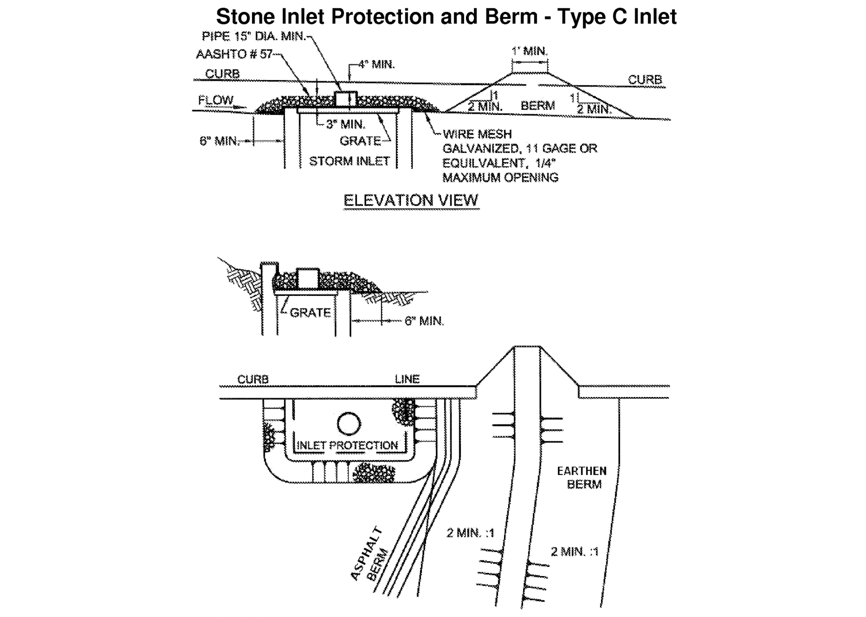

PA DEP

Inlet protection shall not be required for inlet tributary to sediment basin or trap. Berms shall be required for all installations.

Rolled earthen berm shall be provided and maintained immediately down gradient of the protected inlet until roadway is stoned. Road subbase berm shall be maintained until roadway is paved. A 6" minimum height asphalt berm shall be maintained until roadway surface receives final coat.

Stone inlet protection and berm for a Type C inlet can be used in one acre maximum drainage area with 15" overflow pipe and 4" head. A perforated plate welded to a metal riser may not be substituted for the wire mesh. A slotted plate welded to the riser may be used in conjunction with the wire mesh if calculations are provided to show sufficient capacity of the inlet to accept the peak runoff for a 2-year storm event from the tributary drainage area.

Sediment shall be removed when it reaches half the height of the stone. Damaged or clogged installations shall be repaired or replaced immediately.

For systems discharging to HQ or EV surface water, a 6" thick compost layer shall be securely anchored on outside and over top of stone. Compost shall meet the standards in Table 4.2.

DO NOT USE ON MAJOR PAVED ROADWAYS WHERE PONDING MAY CAUSE TRAFFIC HAZARDS.

STANDARD CONSTRUCTION DETAIL # 4-16
Filter Bag Inlet Protection - Type M Inlet

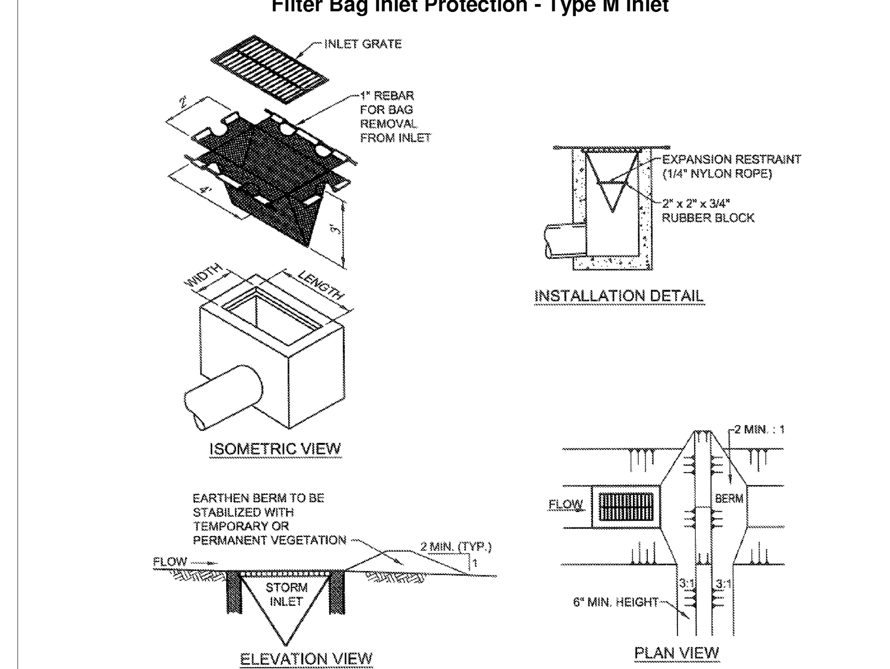

Adapted from PennDOT RC-70, 2008 Edition

Maximum drainage area =½ acre.

Inlet protection shall not be required for inlet tributary to sediment basin or trap. Berms shall be required for all installations.

Rolled earthen berm in roadway shall be maintained until roadway is stoned. Road subbase berm on roadway shall be maintained until roadway is paved. Earthen berm in channel shall be maintained until permanent stabilization is completed or remain permanently.

At a minimum, the fabric shall have a minimum grab tensile strength of 120 lbs., a minimum burst strength of 200 psi, and a minimum trapezoidal tear strength of 50 lbs. Filter bags shall be capable of trapping all particles not passing a No. 40 sieve.

Inlet filter bags shall be inspected on a weekly basis and after each runoff event. Bags shall be emptied and rinsed or replaced when half full or when flow capacity has been reduced so as to cause flooding or bypassing of the inlet. Damaged or clogged bags shall be replaced. A supply shall be maintained on site for replacement of bags. All needed repairs shall be initiated immediately after the inspection. Dispose accumulated sediment as well as all used bags according to the plan notes.

DO NOT USE ON MAJOR PAVED ROADWAYS WHERE PONDING MAY CAUSE TRAFFIC HAZARDS.

STANDARD CONSTRUCTION DETAIL # 4-20
Stone Inlet Protection and Berm - Type M Inlet

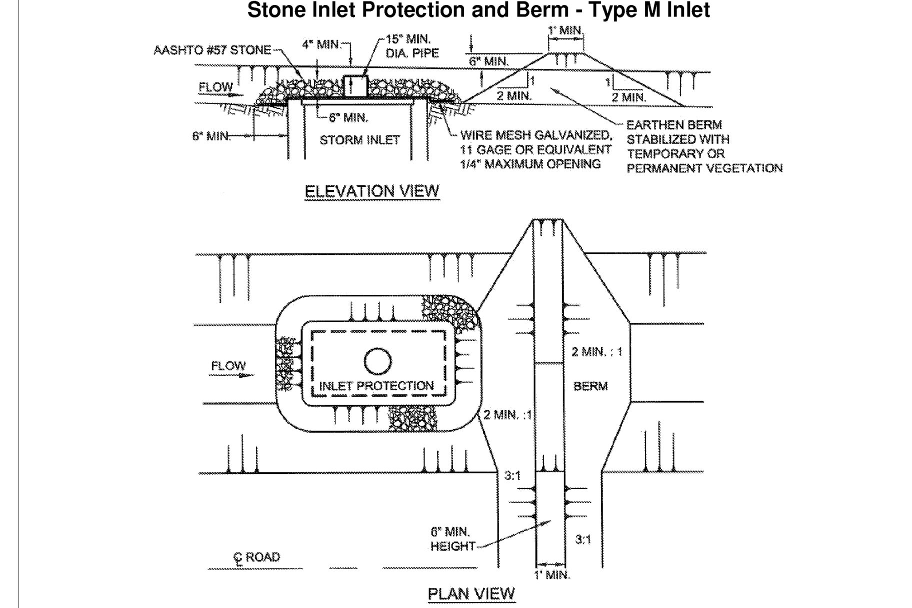

PA DEP

Inlet protection shall not be required for inlet tributary to sediment basin or trap. Berms shall be required for all installations not located at a low point.

Rolled earthen berm in roadway shall be provided and maintained immediately down gradient of the protected inlet until roadway is stoned. Road subbase berm on roadway shall be maintained until roadway is paved. Earthen berm in channel shall be maintained until permanent stabilization is completed or to remain permanently

Stone inlet protection and berm for a Type M Inlet can be used in one acre maximum drainage area with 15" overflow pipe and 4" head. A perforated plate welded to a metal riser may not be substituted for the wire mesh. A slotted plate welded to the riser may be used in conjunction with the wire mesh if calculations are provided to show sufficient capacity of the inlet to accept the peak runoff for a 2-year storm event from the tributary drainage area. Top of pipe shall be at least 6 inches below adjacent roadway if ponded water would pose a safety hazard to traffic. Earthen berm shall be rolled.

Sediment shall be removed when it reaches half the height of the stone. Damaged or clogged installations shall be repaired or replaced immediately. For systems discharging to HQ or EV surface water, a 6 inch thick compost layer shall be securely anchored on outside and over top of stone. Compost shall meet the standards in Table 4.2.

STANDARD CONSTRUCTION DETAIL # 7-3
Skimmer with Stone Landing Berm

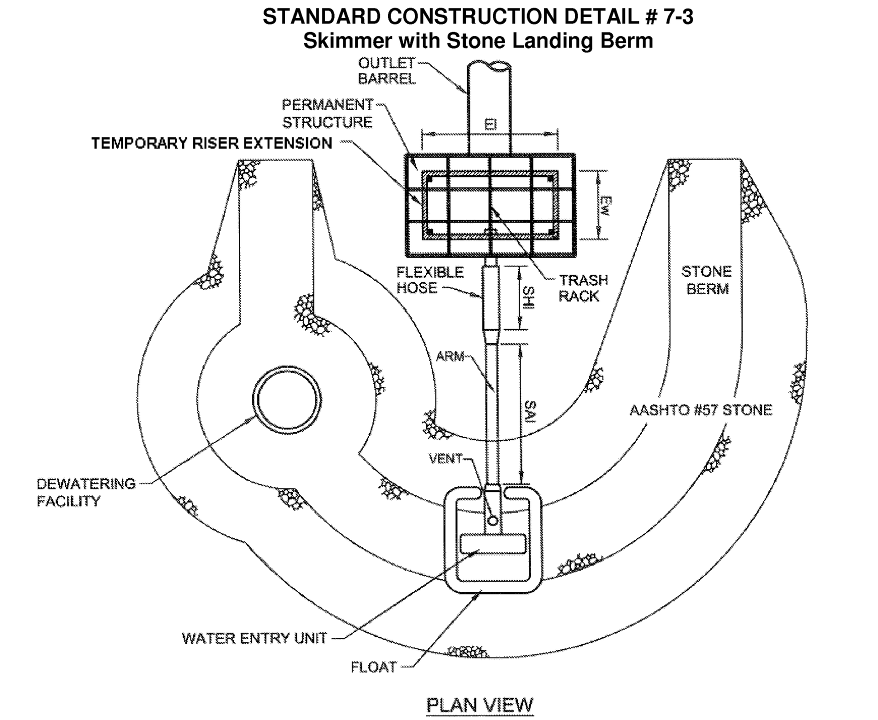

PA DEP

No guide rails shall be required for this installation.

This detail shall be used in conjunction with Standard Construction Details # 7-2 and # 7-4.

THIS DRAWING IS NOT TO BE USED FOR CONSTRUCTION UNLESS STAMPED: "ISSUED FOR CONSTRUCTION"

No.	REVISION	DATE
11	REVISED PER BOROUGH EMAIL COMMENTS (10/09/18)	OCTOBER 24, 2018
10	REVISED PER BOROUGH EMAIL COMMENTS (07/06/18) & 07/09/18)	AUGUST 16, 2018
9	REVISED PER BOROUGH LTR. (12/20/17), SEWER AUTH. LTR. (01/31/18)	JUNE 5, 2018
8	REVISED PER MCCD TECHNICAL REVIEW (03/12/18)	MAY 4, 2018
7	REVISED PER MCCD ADMINISTRATIVE INCOMPLETENESS REVIEW (01/09/18)	JANUARY 16, 2018
	(SEE COVER SHEET FOR COMPLETE LIST OF PLAN REVISION)	
	PLAN ORIGINATION DATE	JUNE 24, 2016

E & S CONTROL DETAILS

AS PART OF

CENTENNIAL APARTMENTS

PREPARED FOR

HOFF PROPERTIES, LLC

SITE SITUATE IN

SCHWENKSVILLE BOROUGH, MONTGOMERY COUNTY, PA

Richard C. Mast Associates, P.C.
Consulting Engineers and Surveyors
www.rcmaonline.com
The Village at Lederach
658 Harleysville Pike, Suite 150
Harleysville, PA 19438
(215) 513-2100

DRAFTED BY	PROJ. MNGR.	PROJECT NO.	DRAWING NO.
R.A.F.	D.B.C.	2800	16 OF 22

STANDARD CONSTRUCTION DETAIL # 3-1
Rock Construction Entrance

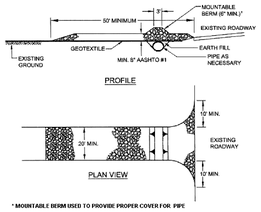

Modified from Maryland DOE

Remove topsoil prior to installation of rock construction entrance. Extend rock over full width of entrance.

Runoff shall be diverted from roadway to a suitable sediment removal BMP prior to entering rock construction entrance.

Mountable berm shall be installed wherever optional culvert pipe is used and proper pipe cover as specified by manufacturer is not otherwise provided. Pipe shall be sized appropriately for size of ditch being crossed.

MAINTENANCE: Rock construction entrance thickness shall be constantly maintained to the specified dimensions by adding rock. A stockpile shall be maintained on site for this purpose. All sediment deposited on paved roadways shall be removed and returned to the construction site immediately. If excessive amounts of sediment are being deposited on roadway, extend length of rock construction entrance by 50 foot increments until condition is alleviated or install wash rack. Washing the roadway or sweeping the deposits into roadway ditches, sewers, culverts, or other drainage courses is not acceptable.

STANDARD CONSTRUCTION DETAIL # 4-6
Rock Filter Outlet

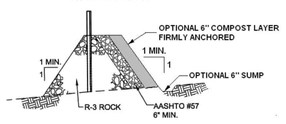

PA DEP

A rock filter outlet shall be installed where failure of a silt fence or straw bale barrier has occurred due to concentrated flow. Anchored compost layer shall be used on upslope face in HQ and EV watersheds.

Sediment shall be removed when accumulations reach 1/3 the height of the outlet.

STANDARD CONSTRUCTION DETAIL #3-5
Waterbar

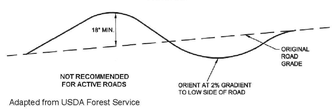

Adapted from USDA Forest Service

Waterbars shall discharge to a stable area.

Waterbars shall be inspected weekly (daily on active roads) and after each runoff event. Damaged or eroded waterbars shall be restored to original dimensions within 24 hours of inspection.

Maintenance of waterbars shall be provided until roadway, skidtrail, or right-of-way has achieved permanent stabilization.

Waterbars on retired roadways, skidtrails, and right-of-ways shall be left in place after permanent stabilization has been achieved.

TABLE 3.1 – Maximum Waterbar Spacing

PERCENT SLOPE	SPACING (FT)
<5	250
5 - 15	150
15 - 30	100
> 30	50

Adapted from USDA Forest Service

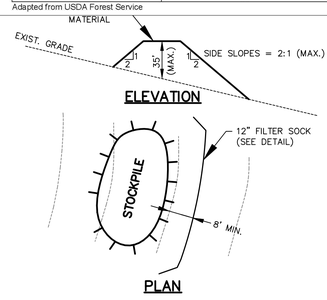

STOCKPILE CONTROL

N.T.S.

STANDARD CONSTRUCTION DETAIL # 9-1
Riprap Apron at Pipe Outlet with Flared End Section or Endwall

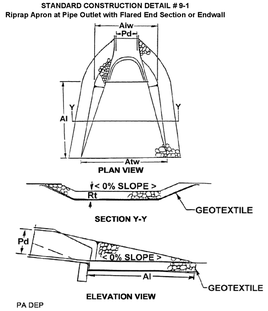

PA DEP

OUTLET NO.	PIPE DIA Pd (IN)	RIPRAP SIZE (R-..)	RIPRAP THICK. Rt (IN)	APRON LENGTH Al (FT)	APRON INITIAL WIDTH Alw (FT)	APRON TERMINAL WIDTH Atw (FT)
C5	15	R-4	18	8	4	10
EX1	24	R-5	27	18	6	18

All aprons shall be constructed to the dimensions shown. Terminal widths shall be adjusted as necessary to match receiving channels.

All aprons shall be inspected at least weekly and after each runoff event. Displaced riprap within the apron shall be replaced immediately.

STANDARD CONSTRUCTION DETAIL # 11-1
Erosion Control Blanket Installation

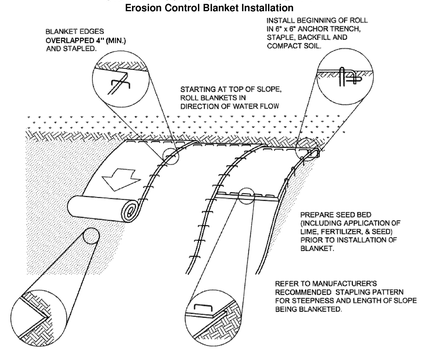

Source Unknown

Seed and soil amendments shall be applied according to the rates in the plan drawings prior to installing the blanket.

Provide anchor trench at toe of slope in similar fashion as at top of slope.

Slope surface shall be free of rocks, clods, sticks, and grass.

Blanket shall have good continuous contact with underlying soil throughout entire length. Lay blanket loosely and stake or staple to maintain direct contact with soil. Do not stretch blanket.

The blanket shall be stapled in accordance with the manufacturer's recommendations.

Blanketed areas shall be inspected weekly and after each runoff event until perennial vegetation is established to a minimum uniform 70% coverage throughout the blanketed area. Damaged or displaced blankets shall be restored or replaced within 4 calendar days.

STANDARD CONSTRUCTION DETAIL #3-15
Sandbag Diversion Dam or Cofferdam

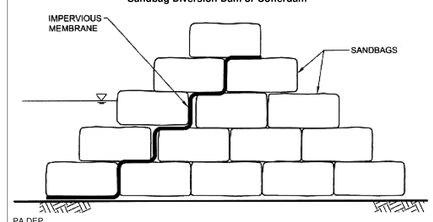

PA DEP

2 BAG MINIMUM HEIGHT ABOVE NORMAL BASE FLOW

STANDARD CONSTRUCTION DETAIL # 3-16
Pumped Water Filter Bag

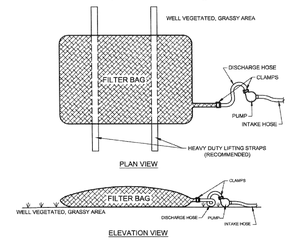

PA DEP

Low volume filter bags shall be made from non-woven geotextile material sewn with high strength, double stitched "J" type seams. They shall be capable of trapping particles larger than 150 microns. High volume filter bags shall be made from woven geotextiles that meet the following standards:

Property	Test Method	Minimum Standard
Avg. Wide Width Strength	ASTM D-4884	60 lb/in
Grab Tensile	ASTM D-4632	205 lb
Puncture	ASTM D-4833	110 lb
Mullen Burst	ASTM D-3786	350 psi
UV Resistance	ASTM D-4355	70%
AOS % Retained	ASTM D-4751	80 Sieve

A suitable means of accessing the bag with machinery required for disposal purposes shall be provided. Filter bags shall be replaced when they become ½ full of sediment. Spare bags shall be kept available for replacement of those that have failed or are filled. Bags shall be placed on straps to facilitate removal unless bags come with lifting straps already attached.

Bags shall be located in well-vegetated (grassy) area, and discharge onto stable, erosion resistant areas. Where this is not possible, a geotextile underlayment and flow path shall be provided. Bags may be placed on filter stone to increase discharge capacity. Bags shall not be placed on slopes greater than 5%. For slopes exceeding 5%, clean rock or other non-erodible and non-polluting material may be placed under the bag to reduce slope steepness.

No downslope sediment barrier is required for most installations. Compost berm or compost filter sock shall be installed below bags located in HQ or EV watersheds, within 50 feet of any receiving surface water or where grassy area is not available.

(Additional Notes for Standard Construction Detail # 3-16)

The pump discharge hose shall be inserted into the bags in the manner specified by the manufacturer and securely clamped. A piece of PVC pipe is recommended for this purpose.

The pumping rate shall be no greater than 750 gpm or ½ the maximum specified by the manufacturer, whichever is less. Pump intakes shall be floating and screened.

Filter bags shall be inspected daily. If any problem is detected, pumping shall cease immediately and not resume until the problem is corrected.

TOPSOIL APPLICATION

Graded areas should be scarified or otherwise loosened to a depth of 3 to 5 inches to permit bonding of the topsoil to the surface areas and to provide a roughened surface to prevent topsoil from sliding down slope.

Topsoil should be uniformly distributed across the disturbed area to a depth of [6]* inches minimum [in all areas]*. Spreading should be done in such a manner that sodding or seeding can proceed with a minimum of additional preparation or tillage. Irregularities in the surface resulting from topsoil placement should be corrected in order to prevent formation of depressions unless such depressions are part of the PCSM plan.

Topsoil should not be placed while the topsoil or subsoil is in a frozen or muddy condition, when the subsoil is excessively wet, or in a condition that may otherwise be detrimental to proper grading and seedbed preparation. Compacted soils should be scarified 6 to 12 inches along contour wherever possible prior to seeding.

TABLE 11.1
Cubic Yards of Topsoil Required for Application to Various Depths

Depth (in)	Per 1,000 Square Feet	Per Acre
1	3.1	134
2	6.2	268
3	9.3	403
4	12.4	537
5	15.5	672
6	18.6	806
7	21.7	940
8	24.8	1,074

Adapted from VA DSWC

* INDICATES REVISED TO COMPLY WITH LOCAL MUNICIPAL REGULATIONS

FIGURE 3.18
Typical Compost Sock Washout Installation

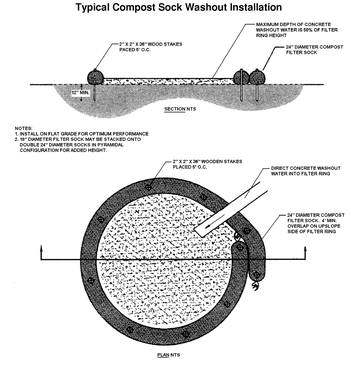

A suitable impervious geomembrane shall be placed at the location of the washout prior to installing the socks.
Adapted from Filtrexx

FIGURE 4.1
Sediment Barrier Alignment

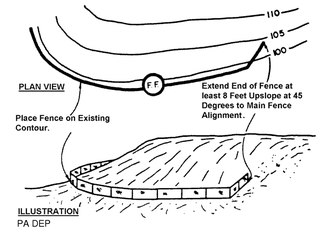

PA DEP

Sediment barriers should be installed on existing level grade in order to be effective. Barriers which cross contours divert runoff to a low point where failure usually occurs. The ends of sediment barriers should be turned upslope at 45 degrees to the main barrier alignment for a distance sufficient to elevate the bottom of the barrier ends to the elevation of the top of the barrier at the lowest point. This is to prevent runoff from flowing around the barrier rather than through it. For most locations, a distance of 8 feet will suffice, as shown in Figure 4.1. In locations where the topography is such that the barrier would have to extend for a long distance, a compacted berm tying into the ends of the barrier may be

STANDARD CONSTRUCTION DETAIL #4-1
COMPOST FILTER SOCK

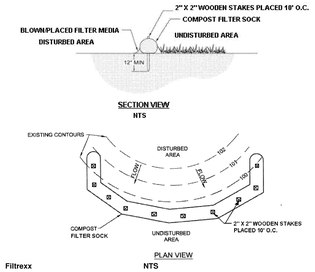

Filtrexx

Sock fabric shall meet standards of Table 4.1. Compost shall meet the standards of Table 4.2.

Compost filter sock shall be placed at existing level grade. Both ends of the sock shall be extended at least 8 feet up slope at 45 degrees to the main sock alignment (Figure 4.1). Maximum slope length above any sock shall not exceed that shown on Figure 4.2. Stakes may be installed immediately downslope of the sock if so specified by the manufacturer.

Traffic shall not be permitted to cross filter socks.

Accumulated sediment shall be removed when it reaches half the aboveground height of the sock and disposed in the manner described elsewhere in the plan.

Socks shall be inspected weekly and after each runoff event. Damaged socks shall be repaired according to manufacturer's specifications or replaced within 24 hours of inspection.

Biodegradable filter socks shall be replaced after 6 months; photodegradable socks after 1 year. Polypropylene socks shall be replaced according to manufacturer's recommendations.

Upon stabilization of the area tributary to the sock, stakes shall be removed. The sock may be left in place and vegetated or removed. In the latter case, the mesh shall be cut open and the mulch spread as a soil supplement.

TABLE 4.1
Compost Sock Fabric Minimum Specifications

Material Type	3 mil HDPE	5 mil HDPE	5 mil HDPE	Multi-Filament Polypropylene (MFPP)	Heavy Duty Multi-Filament Polypropylene (HDMFPP)
Material Characteristics	Photo-degradable	Photo-degradable	Bio-degradable	Photo-degradable	Photo-degradable
Sock Diameters	12" 18"	12" 18" 24" 32"	12" 18" 24" 32"	12" 18" 24" 32"	12" 18" 24" 32"
Mesh Opening	3/8"	3/8"	3/8"	3/8"	1/8"
Tensile Strength		26 psi	26 psi	44 psi	202 psi
Ultraviolet Stability % Original Strength (ASTM G-155)	23% at 1000 hr.	23% at 1000 hr.		100% at 1000 hr.	100% at 1000 hr.
Minimum Functional Longevity	6 months	9 months	6 months	1 year	2 years
Two-ply systems					
Inner Containment Netting		HDPE biaxial net			
		Continuously wound			
		Fusion-welded junctures			
		3/4" X 3/4" Max. aperture size			
Outer Filtration Mesh		Composite Polypropylene Fabric (Woven layer and non-woven fleece mechanically fused via needle punch)			
		3/16" Max. aperture size			
Sock fabrics composed of burlap may be used on projects lasting 6 months or less.					

Filtrexx & JMD

Compost should be a well decomposed, weed-free organic matter derived from agriculture, food, stump grindings, and yard or wood/bark organic matter sources. The compost should be aerobically composted. The compost should possess no objectionable odors and should be reasonably free (<1%

by dry weight) of man-made foreign matter. The compost product should not resemble the raw material from which it was derived. Wood and bark chips, ground construction debris or reprocessed wood products are not acceptable as the organic component of the mix.

The physical parameters of the compost should comply with the standards in Table 4.2. The standards contained in the PennDOT Publication 408 are an acceptable alternative.

TABLE 4.2
Compost Standards

Organic Matter Content	25% - 100% (dry weight basis)
Organic Portion	Fibrous and elongated
pH	5.5 - 8.5
Moisture Content	30% - 60%
Particle Size	30% - 50% pass through 3/8" screen
Soluble Salt Concentration	5.0 dS/m (mmhos/cm) Maximum

Filtrexx

FIGURE 3.11
Temporary Cofferdam and Pump Bypass Around In-channel Work Areas

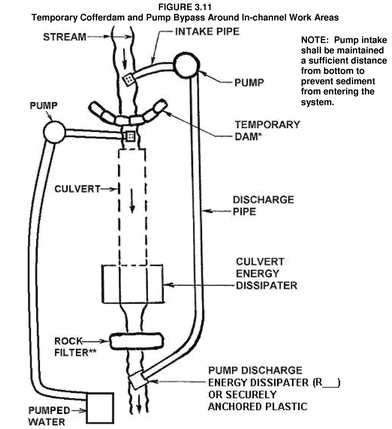

NOTE: Pump intake shall be maintained a sufficient distance from bottom to prevent sediment from entering the system.

PA DEP

* **Sandbags (Standard Construction Detail #3-15), Jersey barriers (Figure 3.13) or other non-erosive material, no earth fill. Do not excavate a sump for the pump intake.**

** **See Standard Construction Detail # 4-14. For low gradient channels, the rock filter may be replaced by an impervious cofferdam to prevent backflow into the work area.**

STANDARD CONSTRUCTION DETAIL # 13-4
Typical Trench Plug Installation

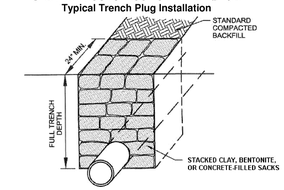

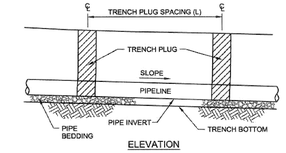

PA DEP

TABLE 13.1
Maximum Spacing and Materials for Trench Plugs

Trench Slope (%)	Spacing L (FT)	Plug Material
< 5	1,000	* Clay, Bentonite, or Concrete Filled Sacks
5 - 15	500	* Clay, Bentonite, or Concrete Filled Sacks
15 - 25	300	* Clay, Bentonite, or Concrete Filled Sacks
25 - 35	200	* Clay, Bentonite, or Concrete Filled Sacks
35 - 100	100	* Clay, Bentonite, or Concrete Filled Sacks
> 100	50	Cement Filled Bags (Wetted) or Mortared Stone

***TOPSOIL MAY NOT BE USED TO FILL SACKS.**

Impervious trench plugs are required for all stream, river, wetland, or other water body crossings.

THIS DRAWING IS NOT TO BE USED FOR CONSTRUCTION UNLESS STAMPED: "ISSUED FOR CONSTRUCTION"

No.	REVISION	DATE
11	REVISED PER BOROUGH EMAIL COMMENTS (10/09/18)	OCTOBER 24, 2018
10	REVISED PER BOROUGH EMAIL COMMENTS (07/06/18) & 07/09/18)	AUGUST 16, 2018
9	REVISED PER BOROUGH LTR. (12/20/17), SEWER AUTH. LTR. (01/31/18)	JUNE 5, 2018
8	REVISED PER MCCD TECHNICAL REVIEW (03/12/18)	MAY 4, 2018
7	REVISED PER MCCD ADMINISTRATIVE INCOMPLETENESS REVIEW (01/09/18)	JANUARY 16, 2018
	(SEE COVER SHEET FOR COMPLETE LIST OF PLAN REVISION)	
	PLAN ORIGINATION DATE	JUNE 24, 2016

E & S CONTROL DETAILS

AS PART OF

CENTENNIAL APARTMENTS

PREPARED FOR

HOFF PROPERTIES, LLC

SITE SITUATE IN

SCHWENKSVILLE BOROUGH, MONTGOMERY COUNTY, PA

RICHARD C. MAST ASSOCIATES, P.A.
RCMA
The Village at Lederach
658 Harleysville Pike, Suite 150
Harleysville, PA 19438
(215) 513-2100

Richard C. Mast Associates, P.C.
Consulting Engineers and Surveyors
www.rcmaonline.com

DRAFTED BY	PROJ. MNGR.	PROJECT NO.	DRAWING NO.
R.A.F.	D.B.C.	2800	17 OF 22

G:\ProjectAdmin\2800 Series\2800 Hoff – Centennial Street Apartments\6 Project CAD Files\2800 16 ZES-DET

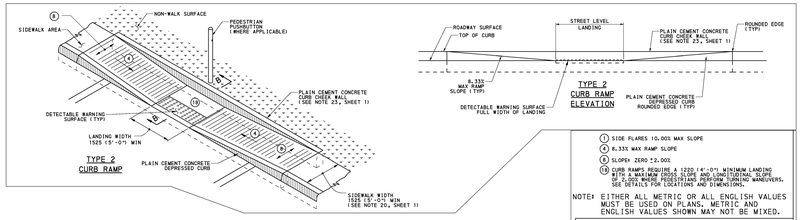

(7) SIDE FLARES 10.00% MAX SLOPE
(8) 8.333% MAX RAMP SLOPE
(9) SLOPE= ZERO ±2.00%
(10) CURB RAMPS REQUIRE A 1220 (4'-0") MINIMUM LANDING WITH A MAXIMUM CROSS-SLOPE AND LONGITUDINAL SLOPE OF 2.00% TO ACCOMMODATE WHEELCHAIR TURNING MANEUVERS. SEE DETAILS FOR LOCATIONS AND DIMENSIONS.

NOTE: EITHER ALL METRIC OR ALL ENGLISH VALUES MUST BE USED ON PLANS. METRIC AND ENGLISH VALUES SHOWN MAY NOT BE MIXED.

COMMONWEALTH OF PENNSYLVANIA
DEPARTMENT OF TRANSPORTATION
BUREAU OF DESIGN

CURB RAMPS AND SIDEWALKS

NEW CONSTRUCTION OR ALTERATION DETAILS
TYPE 2 AND TYPE 3 CURB RAMPS

RECOMMENDED ---, ---, 2009	RECOMMENDED JAN. 1, 2010	SHT 3 OF 13
CHIEF, HWY. GA DIVISION	DIRECTOR, BUREAU OF DESIGN	RC-67M

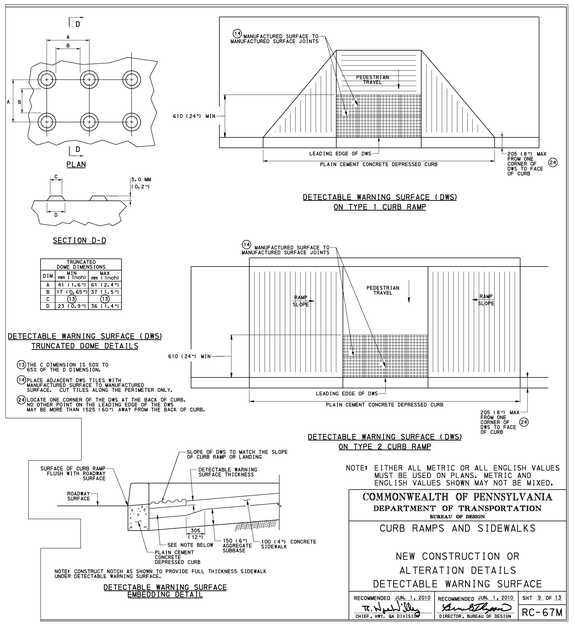

TRUNCATED DOME DIMENSIONS		
DIM	MIN mm (inch)	MAX mm (inch)
A	42 (1.65")	61 (2.4")
B	37 (1.65")	37 (1.5")
C	(3)	(3)
D	23 (0.9")	36 (1.4")

(13) THE C DIMENSION IS SIZE TO SIZE OF THE D DIMENSION.
(23) PLACE ADJACENT DWS TILES WITH MANUFACTURED SURFACE TO MANUFACTURED SURFACE. CUT TILES ALONG THE PERIMETER ONLY.
(24) LOCATE ONE CORNER OF THE DWS AT THE BACK OF CURB. NO OTHER POINT ON THE LEADING EDGE OF THE DWS MAY BE MORE THAN 1525 (60") AWAY FROM THE BACK OF CURB.

NOTE: EITHER ALL METRIC OR ALL ENGLISH VALUES MUST BE USED ON PLANS. METRIC AND ENGLISH VALUES SHOWN MAY NOT BE MIXED.

COMMONWEALTH OF PENNSYLVANIA
DEPARTMENT OF TRANSPORTATION
BUREAU OF DESIGN

CURB RAMPS AND SIDEWALKS

NEW CONSTRUCTION OR ALTERATION DETAILS
DETECTABLE WARNING SURFACE

RECOMMENDED JUN. 1, 2010	RECOMMENDED JUN. 1, 2010	SHT 9 OF 13
CHIEF, HWY. GA DIVISION	DIRECTOR, BUREAU OF DESIGN	RC-67M

NOTES

1. PROVIDE MATERIALS AND CONSTRUCTION MEETING THE REQUIREMENTS OF PUBLICATION 408, SECTIONS 350, 409, 630, 676 AND 694.
2. PROVIDE EXPANSION JOINT MATERIAL (1/2") THICK WHERE CURB RAMP ABUTS CURB, GUTTER, OR SIDEWALK. SEAL THE TOP 1" OF THE JOINT WITH JOINT FILLER FLUSH WITH ADJACENT CONCRETE SURFACE.
3. CONSTRUCT CURB RAMPS WITH A MINIMUM 1220 X 1220 (4'-0" X 4'-0") CLEAR SPACE BEYOND THE CURB FACE, WITHIN THE WIDTH OF THE CROSSWALK AND WHOLLY OUTSIDE THE PARALLEL VEHICLE TRAVEL LANE. SEE SHEET 7 FOR CROSSWALK DETAILS.
4. SEAL JOINTS WITH AN APPROVED SEALING MATERIAL.
5. PROVIDE SLIP RESISTANT TEXTURE ON CURB RAMP BY COARSE BROOMING TRANSVERSE TO THE SLOPE OF THE RAMP. EXTEND TEXTURE THE FULL WIDTH AND LENGTH OF THE CURB RAMP INCLUDING FLARED SIDE SLOPES.
6. MODIFY CONSTRUCTION DETAILS TO ADAPT DIMENSIONS TO EXISTING CURB HEIGHTS WHERE THE CURB IS LESS THAN THE STANDARD 205 (8") HEIGHT.
7. CURB RAMP AND SIDE FLARE LENGTHS ARE VARIABLE AND BASED ON CURB HEIGHT AND THE SIDEWALK SLOPE.
8. TO AVOID CHASING GRADE INDEFINITELY WHEN TRAVERSING THE HEIGHT OF CURB, RAMP LENGTH NOT TO EXCEED 4500 (15'-0"). ADJUST RAMP SLOPE AS NEEDED TO PROVIDE ACCESS TO THE MAXIMUM EXTENT FEASIBLE.
9. NON-WALK AREA IS AN OBSTRUCTED OR GRASS/NON-PAVED AREA ADJACENT TO THE PEDESTRIAN ACCESS ROUTE THAT IS NOT USED BY THE PEDESTRIAN FOR ACCESS.
10. THE DETAILS DEPICT PEDESTRIAN PUSHBUTTON POLES TO ILLUSTRATE THE RECOMMENDED PLACEMENT OF PEDESTRIAN PUSHBUTTONS. FOR ALTERATION PROJECTS, PROVIDE ACCESS TO PEDESTRIAN PUSHBUTTONS WHERE PRACTICABLE. DO NOT INSTALL PEDESTRIAN PUSHBUTTON STUB POLES, WHERE APPLICABLE, IF DO AS NOT TO CREATE PEDESTRIAN OBSTRUCTIONS.
11. ALL DIMENSIONS ARE IN MILLIMETERS UNLESS OTHERWISE NOTED. US CUSTOMARY UNITS IN (): PARENTHESIS.
12. ALIGN DETECTABLE WARNING SURFACE TRUNCATED DOMES ON A SQUARE GRID IN THE PREDOMINANT DIRECTION OF THE RAMP AND PERPENDICULAR TO CURB.
13. PROVIDE DETECTABLE WARNING SURFACES (DWS). 610 (24") MINIMUM (IN THE DIRECTION OF PEDESTRIAN TRAVEL) ACROSS FULL WIDTH OF RAMP AT THE BOTTOM OF THE RAMP OR BREAK NEAR STREET EDGE. PROVIDE DWS THAT CONTRAST VISUALLY WITH ADJACENT WALKWAY SURFACES, EITHER LIGHT-ON-DARK OR DARK-ON-LIGHT FOR THE FULL WIDTH OF RAMP.
14. FOR NEW CONSTRUCTION, DO NOT EXCEED 2.00% CROSS SLOPE ON THE CURB RAMP OR PEDESTRIAN ACCESSIBLE ROUTE.
15. FOR NEW CONSTRUCTION AND ALTERATIONS, CONSTRUCT CURB RAMP AND FLARE SLOPES WITH A MAXIMUM 10.00% SLOPE. FOR ALTERATIONS, CURB RAMP SLOPES MAY EXCEED 8.333% BUT MAY NOT SLOPE ALLOWABLE. SLOPES THAT EXCEED THOSE INDICATED IN THE DETAILS, OR CONTRACT DOCUMENTS AS APPLICABLE, WILL NOT BE ACCEPTED AND WILL BE RECONSTRUCTED.
16. CONSTRUCT SIDEWALKS AT A LONGITUDINAL SLOPE NOT TO EXCEED 5.00%. FOR ROADWAY PROFILE SLOPES THAT EXCEED 5.00%, CONSTRUCT PARALLEL SIDEWALKS ADJACENT TO ROADWAY AT A LONGITUDINAL SLOPE NOT TO EXCEED ROADWAY PROFILE SLOPE.
17. THE CHANGE IN GRADE AT THE BOTTOM OF THE CURB RAMP AND ADJOINING ROAD SURFACE IS NOT TO EXCEED AN ALGEBRAIC DIFFERENCE OF 11.00%. THE FOURTEEN SLOPE OF THE GUTTER OR ROADWAY SURFACE, CURB RAMP, LANDING OR BLENDED TRANSITION IS NOT TO EXCEED 5.00%. SEE SHEET 8 FOR DETAILS.
18. THE CONSTRUCTION STANDARDS DEPICTED ARE MOST APPROPRIATE FOR NEW CONSTRUCTION. ALL CONSTRUCTION MUST MEET THE STANDARDS CONTAINED HEREIN UNLESS OTHERWISE NOTED OR DIRECTED.
19. ALL SLOPES ARE MEASURED WITH RESPECT TO A LEVEL PLANE. THEREFORE, THE LENGTH OF RAMP IS NOT SOLELY DEPENDANT ON THE HEIGHT OF CURB. FOR EXAMPLE, A 150 (6") CURB DOES NOT NECESSARILY MEAN A RAMP LENGTH OF 1830 (6'-0") FOR A 12:1 (1:12) SLOPE.
20. SIDEWALK WIDTH MAY BE REDUCED TO 1220 (4'-0") WHEN PASSING AREAS 1525 X 1525 (5'-0" X 5'-0") ARE PROVIDED EVERY 61 METERS (200').
21. THE TRAVEL LANE IS DEFINED BY THE OUTSIDE EDGE OF THE WHITE PAVEMENT MARKING LINE. IF A WHITE PAVEMENT MARKING LINE DOES NOT EXIST, THE TRAVEL LANE IS DEFINED BY THE CONTRACT DOCUMENTS.
22. CONSTRUCT DEPRESSED CURB FOR CURB RAMPS FLUSH TO ADJACENT ROADWAY. GRADE EDGE OF ROAD ELEVATIONS AT THE FLOW LINE TO ENSURE POSITIVE DRAINAGE AND PREVENTION OF PONDING. FOR LEVEL LANDINGS BEHIND DEPRESSED CURB, ADJUST SLOPES TO PROVIDE POSITIVE DRAINAGE.
23. CHECK WALLS ARE PERMITTED WHEN ADJACENT TO NON-WALK AREAS OR ELEVATION DIFFERENCES CANNOT BE ACCOMMODATED BY FLARES OR GRADING. GRADE GRASS AREAS ON OTHER NON-WALK AREAS AT 3:1 (33%) MAXIMUM. DO NOT INSTALL CHECK WALLS THAT INTERSECT THE PEDESTRIAN ACCESS ROUTE.
24. CONSTRUCT TOP OF PLAIN CEMENT CONCRETE DEPRESSED CURB TO BE FLUSH WITH ADJACENT SURFACES (RAMPS, SIDEWALKS, FLARES).
25. FOR CURB RAMPS THAT LEAD TO A SINGLE CROSSWALK, THE RAMP (EXCLUDING FLARES) TO BE FULLY INSIDE OF MARKED CROSSWALK LINES. SEE SHEET 7 FOR DETAILS.
26. A 1220 (4'-0") MAXIMUM DIGITAL DISPLAY LEVEL WILL BE USED TO VERIFY THE SLOPES OF CURB RAMPS AND SIDEWALKS.

COMMONWEALTH OF PENNSYLVANIA
DEPARTMENT OF TRANSPORTATION
BUREAU OF DESIGN

CURB RAMPS AND SIDEWALKS

NEW CONSTRUCTION OR ALTERATION DETAILS
TYPE 1 TYPICAL SECTIONS

RECOMMENDED JUN. 1, 2010	RECOMMENDED JUN. 1, 2010	SHT 1 OF 13
CHIEF, HWY. GA DIVISION	DIRECTOR, BUREAU OF DESIGN	RC-67M

ADDITIONAL PLANTINGS
SALDO §147-39.F(2) AND §147-39.F(3)

TRACT AREA	PLANTING REQUIREMENT	CALCULATION	REQUIRED CANOPY TREES		RESIDENTIAL UNITS	PLANTING REQUIREMENT	REQUIRED CANOPY TREES
2.4539 ACRES	ONE CANOPY TREE PER 10,000 SQUARE FEET	2.4539 X 43560 = 106,891.88 106,891.88 / 10,000 = 11 CANOPY TREES	**11 CANOPY TREES** (WAIVER REQUESTED)		28 UNITS	ONE CANOPY TREE FOR EVERY TWO DWELLING UNITS	**14 CANOPY TREES** (WAIVER REQUESTED)

CREDIT FOR PRESERVED TREES
SALDO §147-39.B(3)

SIZE	NO.	2 1/2" CALIPER TREE CREDIT PER PRESERVED TREE	2 1/2" CALIPER TREES CREDITED
8" DBH	7		
9" DBH	2		
10" DBH	8		
11" DBH	1		
	18	2	36
12" DBH	6		
13" DBH	2		
14" DBH	6		
15" DBH	1		
16" DBH	3		
	18	4	72
18" DBH	5		
20" DBH	1		
21" DBH	1		
22" DBH	1		
	8	6	48
TOTAL 2 1/2" CALIPER TREES CREDITED			156

TREE REPLACEMENT PLANTING REQUIREMENTS
SALDO §147-39.B(4)

SIZE	NO.	CALIPER INCHES OF TREES	2 1/2" CALIPER TREE EQUIVALENT (REQUIRED REPLACEMENT)
6" DBH	14	84	
7" DBH	9	63	
20" DBH	0	0	
21" DBH	0	0	
22" DBH	1	22	
24" DBH	0	0	
SUB-TOTAL		169	**68**
8"-18" DBH	35	--------	**35***

*TREES MUST BE A MINIMUM SIZE OF 2 1/2" CALIPER

NOTE: A WAIVER IS REQUESTED FROM REPLACEMENT TREE PLANTING REQUIREMENTS.

PROPERTY LINE SOFTENING BUFFER PLANTING CALCULATIONS (15' WIDE)
SALDO §147-39.D(2)

DESCRIPTION	LINEAR FEET	REQUIREMENTS PER 100 L.F.	NUMBER REQUIRED	EXISTING TREES	PROPOSED TREES	PRESERVED TREE CREDITS (REFER CALCULATIONS HEREON)	TOTAL PROVIDED TREES
NORTHERN BOUNDARY	469	1 CANOPY TREE (2-2 1/2" CALIPER) 2 UNDERSTORY TREES (1 1/2" MIN. CALIPER) 2 EVERGREEN TREES (8' MIN. HEIGHT)	5 10 10	8 0 0	**0** **8** **10**	0 2 0	8 10 10
WESTERN BOUNDARY	246		3 6 6	14 0 0	**0** **0** **6**	0 6 0	14 6 6

PARKING LOT FILTERING BUFFER PLANTING CALCULATIONS (10' WIDE)
SALDO §147-39.E(3) REFERENCING §147-39.D(4)

LINEAR FEET	REQUIREMENTS PER 100 L.F.	NUMBER REQUIRED	EXISTING PLANTS	PROPOSED PLANTS	PRESERVED TREE CREDITS (REFER CALCULATIONS HEREON)	TOTAL PROVIDED TREES
652	2 CANOPY TREE (2-2 1/2" CALIPER) 2 UNDERSTORY TREES (1 1/2" MIN. CALIPER) 5 EVERGREEN TREES (8' MIN. HEIGHT) 5 DECIDUOUS OR EVERGREEN SHRUBS (24" MIN.)	13 13 33 33	2 0 0 0	**0 *** **0 *** **0 *** **0 ***	0 7 0 0	2 7 0 0

* A WAIVER IS REQUESTED FROM PROPOSED PLANTINGS

RIPARIAN PLANTING CALCULATIONS
SALDO §147-39.H

DESCRIPTION	LINEAL FEET	REQUIREMENT	NO.	TREES WITHIN 25'	PROPOSED TREES
NORTHERN BANK	478	1 TREE FOR EVERY 15 LINEAR FEET	32	22	**10**
SOUTHERN BANK	465	1 TREE FOR EVERY 15 LINEAR FEET	31	12	**19**
TOTAL PROPOSED RIPARIAN CORRIDOR TREES					**29**

mailboxes.com 1-800-MAILBOX
Visit us at: www.mailboxes.com

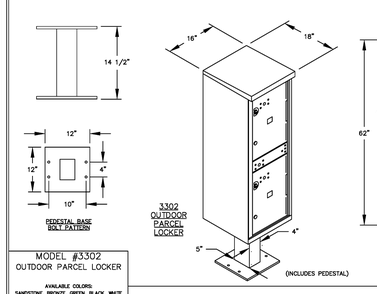

MODEL #3302 OUTDOOR PARCEL LOCKER
AVAILABLE COLORS: SANDSTONE, BRONZE, GREEN, BLACK, WHITE OR GRAY (FOR REPLACEMENT UNITS)
DRAWN: 10/10

Established in 1936, Salsbury Industries is the industry leader in manufacturing and distributing quality mailboxes.

SALSBURY INDUSTRIES Proudly Committed to Quality Since 1936
1010 E. 62ND STREET
LOS ANGELES, CA 90001
PHONE: (800) 624-5269
FAX: (800) 624-5299
email: engineering@mailboxes.com

mailboxes.com 1-800-MAILBOX
Visit us at: www.mailboxes.com

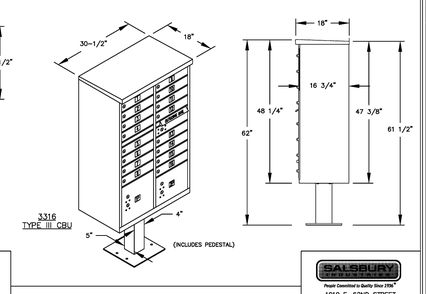

MODEL #3316 CLUSTER BOX UNIT (F SERIES)
AVAILABLE COLORS: SANDSTONE, BRONZE, GREEN, BLACK, WHITE OR GRAY (FOR REPLACEMENT UNITS)
DRAWN: 10/10

Established in 1936, Salsbury Industries is the industry leader in manufacturing and distributing quality mailboxes.

SALSBURY INDUSTRIES Proudly Committed to Quality Since 1936
1010 E. 62ND STREET
LOS ANGELES, CA 90001
PHONE: (800) 624-5269
FAX: (800) 624-5299
email: engineering@mailboxes.com

For product information or design assistance, please contact your local representative or call us at 1-800/547-1949, Ext. 991.
See more at www.TimberForm.com
TimberForm® Restoration®.17

TimberForm Restoration	Model	Length	Width	Height	Seat Height	Mounting
Bench with Armrests	**2118-3**	3' 0" (915mm)	2' 3" (685mm)	2' 10" (865mm)	1' 4" (406mm)	Surface*
(OR EQUAL)	**2118-6**	6' 0" (1830mm)	2' 3" (685mm)	2' 10" (865mm)	1' 4" (406mm)	Surface*
	2118-8	8' 0" (2440mm)	2' 3" (685mm)	2' 10" (865mm)	1' 4" (406mm)	Surface*

Material: Frames of black powder-coated cast iron with kiln-dried 6/4 and 8/4 patterned Alaska yellow cedar wood slats.
Options: Frame color, Marine Teak or Purpleheart wood slats and **powder-coated metal slats**. Can be special ordered with customer's name and/or logo cast in bench ends and/or without decorative rose in casting.
Suggestions: Specify matching litter container **2107** and ash receptacle **2108**. Also see complementary litter container **2136** and ash receptacle **2137** (see page **65**). Matching planters are available.
Notes: * For permanent or movable applications only (anchoring bolts by others).

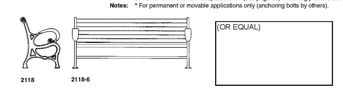

TimberForm Restoration	Model	Length	Width	Height	Seat Height	Mounting
Bench with Intermediate Armrest(s)	**2119-7'**	6' 11" (2115mm)	2' 3" (685mm)	2' 10" (865mm)	1' 4" (406mm)	Surface*
	2119-8'	7' 11" (2415mm)	2' 3" (685mm)	2' 10" (865mm)	1' 4" (406mm)	Surface*
	2119-10'	9' 11" (3025mm)	2' 3" (685mm)	2' 10" (865mm)	1' 4" (406mm)	Surface*
	2119-12'	11' 11" (3630mm)	2' 3" (685mm)	2' 10" (865mm)	1' 4" (406mm)	Surface*
	2119-14'	13' 11" (4240mm)	2' 3" (685mm)	2' 10" (865mm)	1' 4" (406mm)	Surface*
	2119-16'	15' 11" (4850mm)	2' 3" (685mm)	2' 10" (865mm)	1' 4" (406mm)	Surface*

Material: Frames of black powder-coated cast iron with kiln-dried 6/4 and 8/4 patterned Alaska yellow cedar wood slats.
Options: Frame color, Marine Teak or Purpleheart wood slats and **powder-coated metal slats**. Can be special ordered with customer's name and/or logo cast in bench ends and/or without decorative rose in casting.
Suggestions: Specify matching litter container **2107** and ash receptacle **2108**. Also see complementary litter container **2136** and ash receptacle **2137** (see page **65**). Matching planters are available.
Notes: * For permanent or movable applications only (anchoring bolts by others).
† Includes one intermediate frame with armrest.
‡ Includes two intermediate frames with armrest.

All line drawings in this catalog are rendered in the scale of 3/8" = 1' unless otherwise noted.

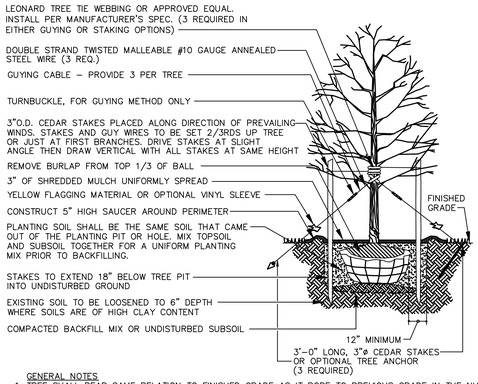

GENERAL NOTES
1. TREE SHALL BEAR SAME RELATION TO FINISHED GRADE AS IT BORE TO PREVIOUS GRADE IN THE NURSERY.
2. PRUNE ONLY TO REMOVE DAMAGED OR BROKEN BRANCHES.
3. LEADER OF TREE SHALL NEVER BE CUT.
4. TREE TIE WEBBING TO BE USED AT ALL CONTACT POINTS WITH TREE TRUNK.

STAKING AND GUYING NOTES
STAKE OR GUY NEWLY PLANTED TREES WHEN:
1 THE TREES HAVE SMALL ROOT SYSTEMS THAT CAN'T PHYSICALLY SUPPORT ABOVE-GROUND GROWTH.
2. THE TREE STEM FLEXES EXCESSIVELY WHEN NOT SUPPORTED.
3. THE PLANTING SITE IS WINDY AND TREES MAY BECOME UPROOTED IF NOT SUPPORTED.
4. VANDALS WILL UPROOT OR DAMAGE UNPROTECTED TREES.

DECIDUOUS TREE PLANTING DETAIL
N.T.S.

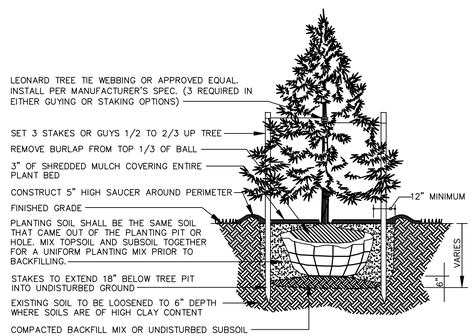

GENERAL NOTES
1. TREE SHALL BEAR SAME RELATION TO FINISHED GRADE AS IT BORE TO PREVIOUS GRADE IN THE NURSERY.
2. PRUNE ONLY TO REMOVE DAMAGED OR BROKEN BRANCHES.
3. LEADER OF TREE SHALL NEVER BE CUT.
4. TREE TIE WEBBING TO BE USED AT ALL CONTACT POINTS WITH TREE TRUNK.

STAKING AND GUYING NOTES
STAKE OR GUY NEWLY PLANTED TREES WHEN:
1 THE TREES HAVE SMALL ROOT SYSTEMS THAT CAN'T PHYSICALLY SUPPORT ABOVE-GROUND GROWTH.
2. THE TREE STEM FLEXES EXCESSIVELY WHEN NOT SUPPORTED.
3. THE PLANTING SITE IS WINDY AND TREES MAY BECOME UPROOTED IF NOT SUPPORTED.
4. VANDALS WILL UPROOT OR DAMAGE UNPROTECTED TREES.

EVERGREEN TREE PLANTING DETAIL
N.T.S.

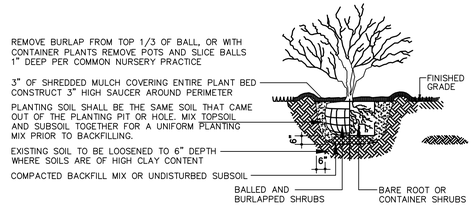

GENERAL NOTES
1. TREE SHALL BEAR SAME RELATION TO FINISHED GRADE AS IT BORE TO PREVIOUS GRADE IN THE NURSERY.
2. PRUNE ONLY TO REMOVE DAMAGED OR BROKEN BRANCHES.
3. ON DECIDUOUS SHRUBS THIN BRANCHES AND FOLIAGE (NOT ALL BRANCH TIPS) BY 1/3, RETAINING NORMAL PLANT SHAPE.

SHRUB PLANTING DETAIL
N.T.S.

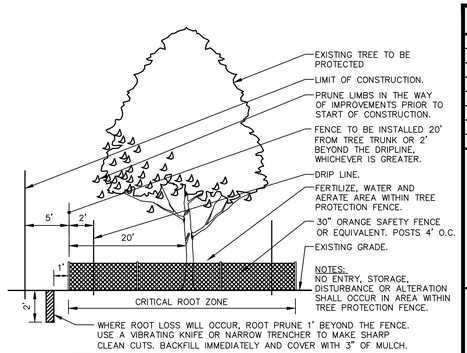

TREE PROTECTION AND PRUNING
N.T.S.

THIS DRAWING IS NOT TO BE USED FOR CONSTRUCTION UNLESS STAMPED: "ISSUED FOR CONSTRUCTION"

No.	REVISION	DATE
11	REVISED PER BOROUGH EMAIL COMMENTS (10/09/18)	OCTOBER 24, 2018
10	REVISED PER BOROUGH EMAIL COMMENTS (07/06/18) & 07/09/18)	AUGUST 16, 2018
9	REVISED PER BOROUGH LTR. (12/20/17), SEWER AUTH. LTR. (01/31/18)	JUNE 5, 2018
8	REVISED PER MCCD TECHNICAL REVIEW (03/12/18)	MAY 4, 2018
7	REVISED PER MCCD ADMINISTRATIVE INCOMPLETENESS REVIEW (01/09/18)	JANUARY 16, 2018
	(SEE COVER SHEET FOR COMPLETE LIST OF PLAN REVISION)	
	PLAN ORIGINATION DATE	JUNE 24, 2016

SITE IMPROVEMENT DETAILS
AS PART OF
CENTENNIAL APARTMENTS
PREPARED FOR
HOFF PROPERTIES, LLC
SITE SITUATE IN
SCHWENKSVILLE BOROUGH, MONTGOMERY COUNTY, PA

RICHARD C. MAST ASSOCIATES, P.C. RCMA
The Village at Lederach
658 Harleysville Pike, Suite 150
Harleysville, PA 19438
(215) 513-2100

Richard C. Mast Associates, P.C.
Consulting Engineers and Surveyors
www.rcmaonline.com

DRAFTED BY	PROJ. MNGR.	PROJECT NO.	DRAWING NO.
R.A.F.	D.B.C.	2800	18 OF 22

Q:\ProjectAdmin\2800 Series\2800 Hoff – Centennial Street Apartments\6 Project CAD Files\2800 18 DET

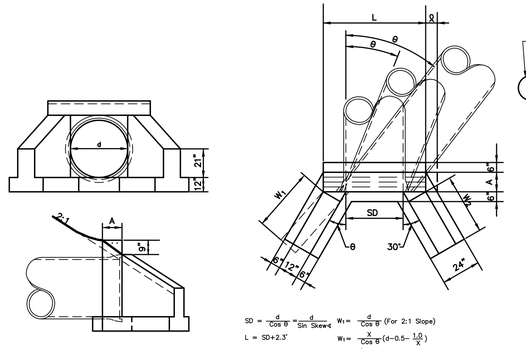

PIPE DIA.	SKEW ∢=90° TO 60° θ=30°			SKEW ∢=55° θ=35°			SKEW ∢=50° θ=40°			SKEW ∢=45° θ=45°			SKEW ∢=40° θ=50°			SKEW ∢=30° θ=60°			SKEW ∢=20° θ=70°			SKEW ∢=10° θ=80°				
d	X	W1	L	X	W1	L	X	W1	L	X	W1	L	X	W1	L	X	W1	L	X	W1	L	X	W1	W1	A
(in.)	(Ft.)	(Ft.)	(Ft.)	(Ft.)	(Ft.)	(Ft.)	(Ft.)	(Ft.)	(Ft.)	(Ft.)	(Ft.)	(Ft.)	(Ft.)	(Ft.)	(Ft.)	(Ft.)	(Ft.)	(Ft.)	(Ft.)	(Ft.)	(Ft.)	(Ft.)	(Ft.)	(Ft.)	(in.)
36	5.8	0	6.4	6.0	.33	4.9	6.2	.5	5.2	6.5	.67	5.7	7.0	.75	6.2	8.3	1.33	8.0	11.1	1.75	11.7	19.6	5.0	23.0	4.6	12
42	6.3	0	5.8	6.6	.33	6.1	6.9	.5	6.5	7.3	.67	7.1	7.8	.75	7.8	9.3	1.33	10.0	12.5	1.75	14.6	22.5	5.0	28.8	5.8	12
48	6.9	0	6.9	7.2	.33	7.3	7.5	.5	7.8	8.0	.67	8.5	8.5	.75	9.4	10.3	1.33	12.0	14.0	1.75	17.5	25.3	5.0	34.6	6.9	12
54	7.5	0	8.0	7.8	.33	8.5	8.2	.5	9.1	8.7	.67	9.9	9.3	.75	10.9	11.3	1.33	14.0	15.5	1.75	20.5	28.2	5.0	40.3	8.0	12
60	8.1	0	9.2	8.4	.33	9.8	8.8	.5	10.4	9.4	.67	11.3	10.1	.75	12.5	12.3	1.33	16.0	16.9	1.75	23.4	31.1	5.0	46.0	9.2	15
72	9.2	0	11.5	9.6	.33	12.2	10.1	.5	13.0	10.8	.67	14.1	11.7	.75	15.6	14.3	1.33	20.0	19.8	1.75	29.2	36.9	5.0	57.6	11.5	15

TYPE "DW" ENDWALL DETAIL

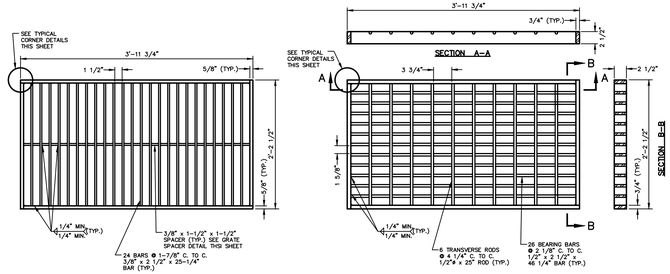

STRUCTURAL STEEL GRATE

STRUCTURAL STEEL GRATE BICYCLE SAFE

NOTES

1. THIS SHEET DEPICTS THE DIMENSIONS REQUIRED FOR UNIFORMITY AND INTERCHANGEABILITY. IT DOES NOT INCLUDE DETAILS REQUIRED FOR FABRICATION OR MANUFACTURING. ONLY GRATES SUPPLIED BY A MANUFACTURER LISTED IN BULLETIN 15 SHALL BE PERMITTED. FOR A BULLETIN 15 LISTING, SUBMIT A CONSTRUCTION 22" x 36" REPRODUCIBLE SHOP DRAWING TO THE BUREAU OF CONSTRUCTION AND MATERIALS, MATERIALS AND TESTING DIVISION FOR REVIEW AND APPROVAL.
2. WELD STRUCTURAL STEEL GRATES IN ACCORDANCE WITH THE REQUIREMENTS OF PUBLICATION 408, SECTION 1105.02(R). WELDING SHOPS ARE NOT REQUIRED TO BE AMERICAN INSTITUTE OF STEEL CONSTRUCTION (AISC) CERTIFIED.
3. PROVIDE TRANSVERSE RODS, MEETING THE REQUIREMENTS OF AASHTO-M227 OR M225, GRADE 70, 75 OR 80, FLUSH WITH THE GRATE SURFACE.
4. PROVIDE BICYCLE-SAFE, STRUCTURAL STEEL OR CAST IRON VANE DRIVES FOR INSTALLATION ONLY WHERE BICYCLE TRAFFIC IS ANTICIPATED. SUCH AS CURRED ROADWAYS IN URBAN AREAS OR ROADWAYS SPECIFICALLY ESTABLISHED AND SIGNED AS BIKEWAYS OR HAVING BIKE LANES. ALTERNATE BICYCLE-SAFE GRATE DESIGNS SHALL REQUIRE A SHOP DRAWING SUBMISSION, AS SPECIFIED IN NOTE 1, AND SHALL CONFORM TO THE DIMENSIONAL REQUIREMENTS FOR PROPER INSTALLATION WITH THE CURRENT CONCRETE TOP UNITS.
5. FABRICATE SLOTS BY BURNING, DRILLING, SHEARING OR PUNCHING. HAVE THE BOTTOM OF ALL BURNED OR DRILLED SLOTS CONFORM TO THE SHAPE OF THE ROD.
6. INSTALL STRUCTURAL STEEL GRATES WITH THE GRATE SPACERS LOCATED FLUSH ALONG THE TOP SURFACE OF THE GRATE.

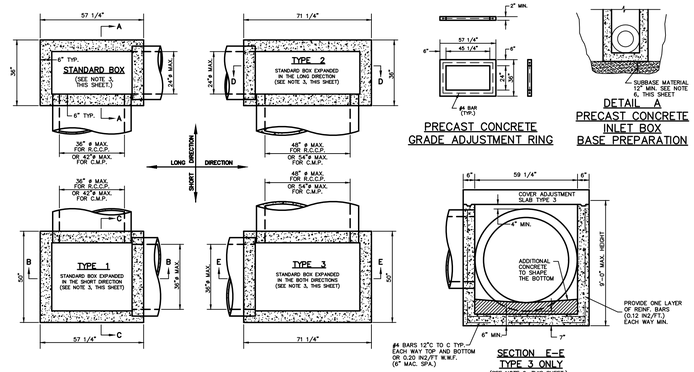

NOTES

1. CONSTRUCT INLET BOXES IN ACCORDANCE WITH THE REQUIREMENTS OF PUBLICATION 408, SECTION 713.2(d). FOR PRECAST CEMENT CONCRETE UNITS.
2. ONLY PRECAST INLET BOXES SUPPLIED BY A MANUFACTURER LISTED IN BULLETIN 15 SHALL BE PERMITTED. FOR A BULLETIN LISTING, SUBMIT A 22"x36" REPRODUCIBLE SHOP DRAWING TO THE BUREAU OF CONSTRUCTION AND MATERIALS, MATERIALS AND TESTING DIVISION FOR REVIEW AND APPROVAL.
3. PROVIDE STANDARD INLET BOXES AND COVER ADJUSTMENT SLABS WITH A 24" MIN. OPENING TO ACCOMMODATE STANDARD TOP COMPONENTS.
4. INLETS THAT EXCEED THE MAXIMUM HEIGHT SHOWN SHALL REQUIRE A SPECIAL DETAIL AND DESIGN FOR THE INLET WALLS AND BASE. CONSTRUCT INLETS THAT EXCEED 5 FEET IN HEIGHT WITH STEPS SIMILAR TO MANHOLES. SEE RC–39.
5. LOCATE PIPE OR PIPES, AS INDICATED, WITH THE INLET BOTTOM SHAPED TO CHANNEL THE FLOW TOWARD THE OUTLET PIPE.
6. PLACE SUBBASE MATERIAL MEETING THE REQUIREMENTS OF PUBLICATION 408, SECTION 350.2, IN 4 INCH LAYERS, COMPACTED TO A DENSITY SATISFACTORY TO THE ENGINEER AND INCIDENTAL TO THE INLET PAY ITEM.
7. FOR PIPE DIAMETERS LARGER THAN 36" IN THIS WALL FOR A TYPE 1, USE A MODIFIED TYPE I INLET BOX ON RC–34, SHEET 8 OF 9.
8. FOR PIPE DIAMETERS LARGER THAN 48" R.C.C.P. OR 54" C.M.P. IN THIS WALL FOR A TYPE 2, USE A MODIFIED TYPE II INLET BOX ON RC–34, SHEET 8 OF 9.
9. FOR PIPE DIAMETERS LARGER THAN 48" R.C.C.P. OR 54" C.M.P. IN THE LONG DIRECTION OR LARGER THAN 36" IN THE SHORT DIRECTION, A SPECIAL DETAIL AND DESIGN IS REQUIRED.

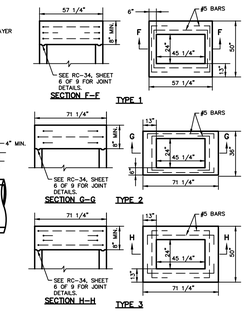

COVER ADJUSTMENT SLABS

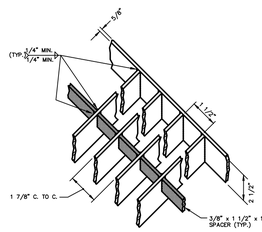

GRATE SPACER DETAIL

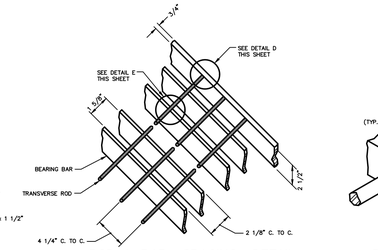

ROD & BAR SPACING DETAIL

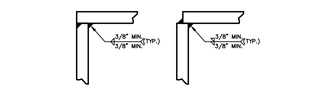

TYPICAL CORNER DETAILS

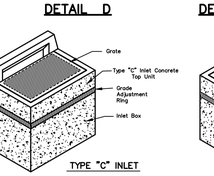

DETAIL D

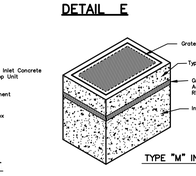

DETAIL E

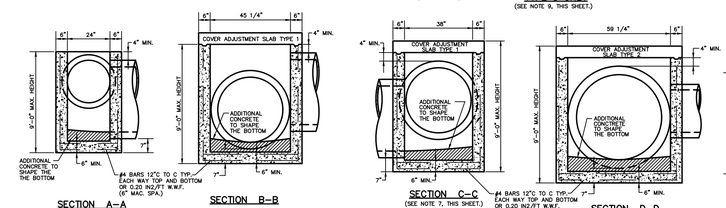

STANDARD INLET BOXES (PRECAST)

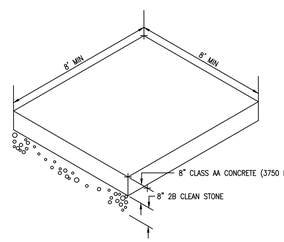

NOTES:
1. PROVIDE MATERIALS AND CONSTRUCTION IN CONFORMANCE WITH THE REQUIREMENTS OF PENNDOT PUBLICATION 408, CURRENT EDITION, AND AS MODIFIED HEREIN.
2. CONCRETE SHALL BE CLASS AA (3750 PSI), AIR ENTRAINED (6%) WITH A 4" SLUMP MAX.
3. ALL EDGES TO BE ROUNDED WITH A 1/2" TOOL.
4. LIGHT BROOM FINISH TO BE APPLIED.
5. WEATHER PROTECTION SHALL BE USED IN ACCORDANCE WITH PENNDOT PUBLICATION 408, CURRENT EDITION.
6. PENETRATING SEALER TO BE APPLIED IMMEDIATELY FOLLOWING FINISHING OPERATIONS. PENETRATING SEALER TO BE AQURON CPT 2000 OF APPROVED EQUAL.
7. 2B CLEAN STONE BASE SHALL BE MECHANICALLY TAMPED.
8. PLACE 6"x6"x10 GUAGE WELDED WIRE FABRIC 2" FROM CONCRETE SURFACE AND ANOTHER 3" FROM CONCRETE BOTTOM SURFACE.

TRASH RECEPTICAL CONCRETE PAD DETAIL

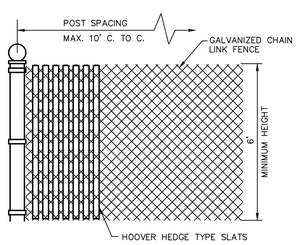

TRASH ENCLOSURE FENCE DETAIL

N.T.S.

NOTE: 1. TO BE USED AROUND TRASH RECEPTACLE AREA.
2. GATES TO BE CONSTRUCTED WITH LIKE MATERIALS AND SLATS.

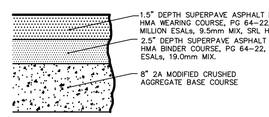

TYPICAL PAVING SPECIFICATION
PROPOSED PARKING FACILITIES

N.T.S.

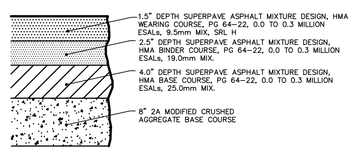

TYPICAL PAVING SPECIFICATION
FOREST LANE REPAIR AND RESTORATION

N.T.S.

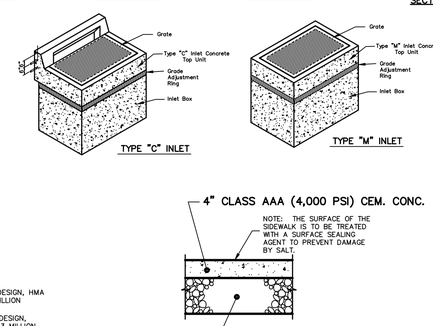

NOTES:
1. WHERE SIDEWALK GRADE EXCEEDS 5%, A NON–SLIP TEXTURE SHALL BE APPLIED TO THE SURFACE.
2. ONE INCH DEEP JOINTS SHALL BE INSTALLED EVERY 4 FEET.
3. EVERY FOURTH JOINT SHALL BE A ONE–HALF INCH EXPANSION JOINT.

TYPICAL CROSS–SECTION CONC. SIDEWALK

N.T.S.

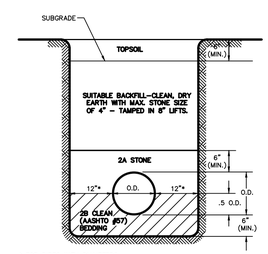

* FOR PIPES WITH DIAMETERS GREATER THAN 48", DISTANCE SHALL BE INCREASED TO 15".

TYPICAL TRENCH DETAIL
(STORM SEWER WITHIN LAWN)

NOT TO SCALE

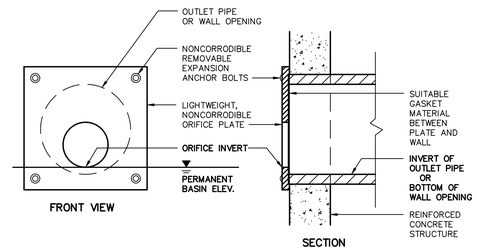

ORIFICE PLATE DETAIL

FACILITY	INLET	ORIFICE SIZE	ORIFICE INV.
BASIN A	C2	3.50"	179.50

NOTE:
1. ORIFICE PLATE TO BE INSTALLED OVER OUTLET PIPE ORIFICE OPENING.
2. OUTLET STRUCTURE INLETS ARE TO HAVE A 12" SUMP BELOW INVERT OUT ELEVATION. THEREFORE, THE ORIFICE PLATE SHALL HAVE 360 DEG. OF MATERIAL AROUND THE ORIFICE AND INSTALLED WITHOUT CONFLICTING WITH THE BOTTOM OF INLET BOX.

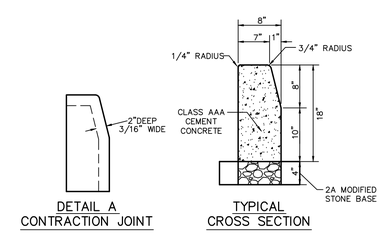

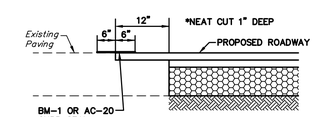

NEAT CUT DETAIL

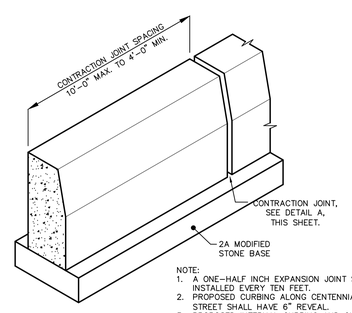

NOTE:
1. A ONE–HALF INCH EXPANSION JOINT SHALL BE INSTALLED EVERY TEN FEET.
2. PROPOSED CURBING ALONG CENTENNIAL STREET SHALL HAVE 6" REVEAL.
3. PROPOSED INTERNAL CURBING AND CURBING ALONG FOREST LANE SHALL HAVE 8" REVEAL.

PLAIN CEMENT CONCRETE CURB

R1–1
STOP SIGN

(a) Justification. The Stop Sign (R1–1) is authorized for use on those streets or highways which intersect with a through highway or at a stop intersection so designated by the Department with reference to State-designated highways or local authorities with reference to highways under their jurisdiction. The R1–1 sign is also authorized for use in work zones involving one–lane, two–way roadways. At intersections where all approaches are controlled by an R1–1 sign, a supplemental ALL–WAY plaque (R2–3P) shall be mounted below each R1–1 sign.

(b) Authorization. Before local authorities designate any highway as a through highway or stop intersection which will intersect or affect a State–designated highway, approval of such designation shall first be obtained from the Department. Approval to install R1–1 signs in work areas shall not require the approval of the Department or local authorities when the conditions stipulated in the Department's Temporary Traffic Control Guidelines are satisfied.

(c) Size. The standard size R1–1 sign shall be 30" x 30" for single lane conventional highways and 36" x 36" for multi–lane conventional highways. The 24" x 24" size shall only be used for alleys with restrictive physical conditions and vehicle usage that prohibits the installation of the standard size R1–1. A sign that is mounted back–to–back with a R1–1 sign should stay within the edges of the R1–1 sign. If necessary, the size of the R1–1 sign should be increased so that any other sign installed back–to–back with it remains within the edges of the R1–1 sign.

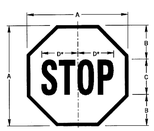

DIMENSIONS – IN					
SIGN SIZE A x A	B	C	D	BORDER	BLANK STD.
18" x 18"	6	6C	8	0.4	
24" x 24"	8	8C	1Q	0.6	R1–24
30" x 30"	10	10C	12.6	0.8	R1–30
36" x 36"	12	12C	15	0.8	R1–36
48" x 48"	16	16C	20	1.2	R1–48

* REDUCE SPACING 40%

COLOR:
LEGEND AND BORDER: WHITE (REFLECTORIZED)
BACKGROUND: RED (REFLECTORIZED)

APPROVED FOR THE SECRETARY OF TRANSPORTATION
By: Date: 02–29–12
Chief, Traffic Engineering and Permits Section
Bureau of Maintenance and Operations

R1_1.DGN

R7–8
RESERVED PARKING SIGN

The Reserved Parking Sign (R7–8) is authorized to mark the location of a parking space which is reserved for handicapped persons or severely disabled veterans.

When used the R7–8 sign should generally be installed at the front of each reserved parking stall, except in the case of parallel parking, it should be installed at intervals not exceeding 100' along the side of the stalls. When installed at the front of the parking stalls, the single or double headed arrow may be deleted from the R7–8 sign and the message may be spaced accordingly.

The Reserved Parking Penalties Sign (R7–8F) shall be posted in conjunction with the R7–8 sign. When used, the R7–8F sign shall be placed below the R7–8 sign.

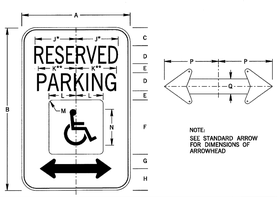

DIMENSIONS – IN																		
SIGN SIZE A x B	C	D	E	F	G	H	J	K	L	M	N	P	Q	MARGIN	BORDER	BLANK STD.
12" x 18"	2	2C	1	6	1.6	2.4	4.9	4.3	3	0.4	4	3.8	0.8	0.4	0.4	R5–1218

* REDUCE SPACING 50%
** REDUCE SPACING 33%

COLOR:
LEGEND, ARROW AND BORDER: GREEN (REFLECTORIZED)
BACKGROUND AND SYMBOL: WHITE (REFLECTORIZED)
SYMBOL BACKGROUND: BLUE (REFLECTORIZED)

APPROVED FOR THE SECRETARY OF TRANSPORTATION
By: Date: 02–29–12
Chief, Traffic Engineering and Permits Section
Bureau of Maintenance and Operations

R7_8.DGN

R7–8F
RESERVED PARKING PENALTIES SIGN

The Reserved Parking Penalties Sign (R7–8F) shall be installed with the Reserved Parking Sign (R7–8). When used, the R7–8F sign shall be placed below the R7–8 Sign. In order to improve visibility of signs installed at the front of reserved stalls, a substandard height to the bottom of the sign of approximately 3'–8" above the parking stall elevation may be used.

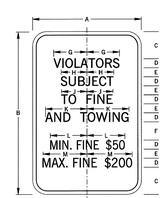

DIMENSIONS – IN																		
SIGN SIZE A x B	C	D	E	F	G	H	J	K	L	M	MARGIN	BORDER	BLANK STD.
12" x 18"	3	1C	1	2	3	2.4	2.3	3.6	4	4.6	0.4	0.4	R5–1218

COLOR:
LEGEND AND BORDER: RED (REFLECTORIZED)
BACKGROUND: WHITE (REFLECTORIZED)

APPROVED FOR THE SECRETARY OF TRANSPORTATION
By: Date: 02–29–12
Chief, Traffic Engineering and Permits Section
Bureau of Maintenance and Operations

R7_8F.DGN

R7–8P
VAN ACCESSIBLE SIGN

The Van Accessible Sign (R7–8P) may be used as a supplemental sign to indicate that a parking space signed with the Reserved Parking Sign (R7–8) is of sufficient size for use by the disabled to accommodate vans displaying a handicapped or severely disabled veteran registration plate or placard.

One in every eight reserved parking spaces for the disabled, but not less than one, shall be designated with the R7–8P sign. When used, the R7–8P sign shall be placed immediately below the Reserved Parking Sign (R7–8).

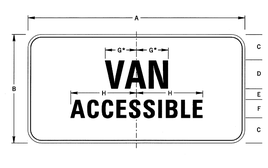

DIMENSIONS – IN													
SIGN SIZE A x B	C	D	E	F	G	H	MARGIN	BORDER	BLANK STD.
12" x 6"	1.4	1.6D	0.6	1D	2.1	4	0.4	0.4	R5–1206

* INCREASE SPACING 50%

COLOR:
LEGEND AND BORDER: GREEN (REFLECTORIZED)
BACKGROUND: WHITE (REFLECTORIZED)

APPROVED FOR THE SECRETARY OF TRANSPORTATION
By: Date: 02–29–12
Chief, Traffic Engineering and Permits Section
Bureau of Maintenance and Operations

R7_8P.DGN

THIS DRAWING IS NOT TO BE USED FOR CONSTRUCTION UNLESS STAMPED: "ISSUED FOR CONSTRUCTION"		
11	REVISED PER BOROUGH EMAIL COMMENTS (10/09/18)	OCTOBER 24, 2018
10	REVISED PER BOROUGH EMAIL COMMENTS (07/06/18) & 07/09/18)	AUGUST 16, 2018
9	REVISED PER BOROUGH LTR. (12/20/17), SEWER AUTH. LTR. (01/31/18)	JUNE 5, 2018
8	REVISED PER MCCD TECHNICAL REVIEW (03/12/18)	MAY 4, 2018
7	REVISED PER MCCD ADMINISTRATIVE INCOMPLETENESS REVIEW (01/09/18)	JANUARY 16, 2018
	(SEE COVER SHEET FOR COMPLETE LIST OF PLAN REVISION)	
No.	REVISION	DATE
	PLAN ORIGINATION DATE	JUNE 24, 2016

SITE IMPROVEMENT DETAILS

AS PART OF

CENTENNIAL APARTMENTS

PREPARED FOR

HOFF PROPERTIES, LLC

SITE SITUATE IN

SCHWENKSVILLE BOROUGH, MONTGOMERY COUNTY, PA

RICHARD C. MAST ASSOCIATES, P.C.
RCMA

Richard C. Mast Associates, P.C.
Consulting Engineers and Surveyors
www.rcmaonline.com

The Village at Lederach
658 Harleysville Pike, Suite 150
Harleysville, PA 19438
(215) 513-2100

DRAFTED BY	PROJ. MNGR.	PROJECT NO.	DRAWING NO.
R.A.F.	D.B.C.	2800	19 OF 22

Q:\ProjectAdmin\2800 Series\2800 Hoff – Centennial Street Apartments\6 Project CAD Files\2800 18 DET

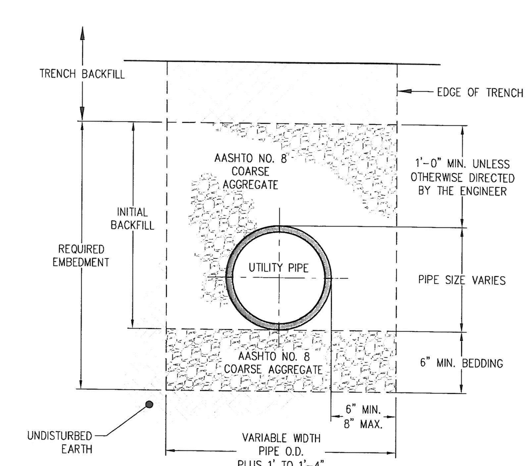

PVC PIPE EMBEDMENT DETAIL
CONSTRUCTION DETAIL G-1A

Ebert Engineering, Inc.
Water and Wastewater Engineering
PO Box 540
4092 Skippack Pike, Suite 202
Skippack, PA 19474
Phone (610) 584 6701
Fax (610) 584 6704
E-mail febert@ebertengineering.com

DETAIL G-1A
PVC PIPE EMBEDMENT DETAIL
SCHWENKSVILLE BOROUGH AUTHORITY
DATE | REVISION

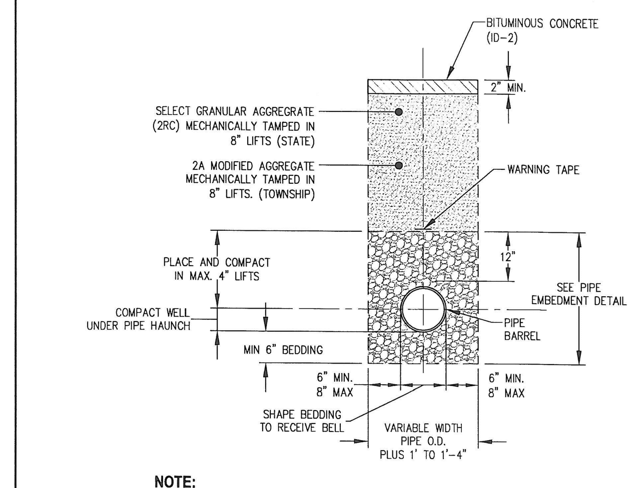

NOTE:
SPECIAL CONDITIONS OF THE HIGHWAY OCCUPANCY PERMIT MAY SUPERSEDE THIS DETAIL CONTRACTOR TO MAINTAIN TEMPORARY PAVING UNTIL PREMANENT PAVING IS COMPLETED.

TEMPORARY PAVEMENT FOR TOWNSHIP ROAD AND STATE HIGHWAY
CONSTRUCTION DETAIL G-5

Ebert Engineering, Inc.
Water and Wastewater Engineering
PO Box 540
4092 Skippack Pike, Suite 202
Skippack, PA 19474
Phone (610) 584 6701
Fax (610) 584 6704
E-mail febert@ebertengineering.com

DETAIL G-5
TEMPORARY PAVEMENT FOR TOWNSHIP ROAD AND STATE HIGHWAY
SCHWENKSVILLE BOROUGH AUTHORITY
DATE | REVISION

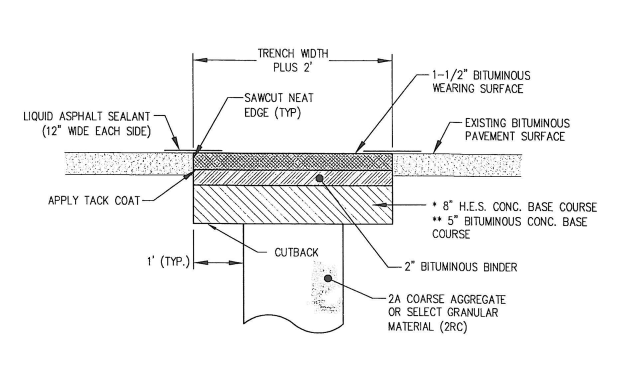

* RESTORATION BEFORE 90 DAYS AFTER COMPLETING BACKFILL.
** RESTORATION AFTER 90 DAYS AFTER COMPLETING BACKFILL.

NOTE:
SPECIAL CONDITIONS OF THE HIGHWAY OCCUPANCY PERMIT MAY SUPERSEDE THIS DETAIL CONTRACTOR TO MAINTAIN TEMPORARY PAVING UNTIL PERMANENT PAVING IS COMPLETED.

PERMANENT PAVEMENT AND TRENCH RESTORATION FOR TOWNSHIP ROAD
CONSTRUCTION DETAIL G-6

Ebert Engineering, Inc.
Water and Wastewater Engineering
PO Box 540
4092 Skippack Pike, Suite 202
Skippack, PA 19474
Phone (610) 584 6701
Fax (610) 584 6704
E-mail febert@ebertengineering.com

DETAIL G-6
TEMPORARY PAVEMENT AND TRENCH RESTORATION FOR TOWNSHIP ROAD
SCHWENKSVILLE BOROUGH AUTHORITY
DATE | REVISION

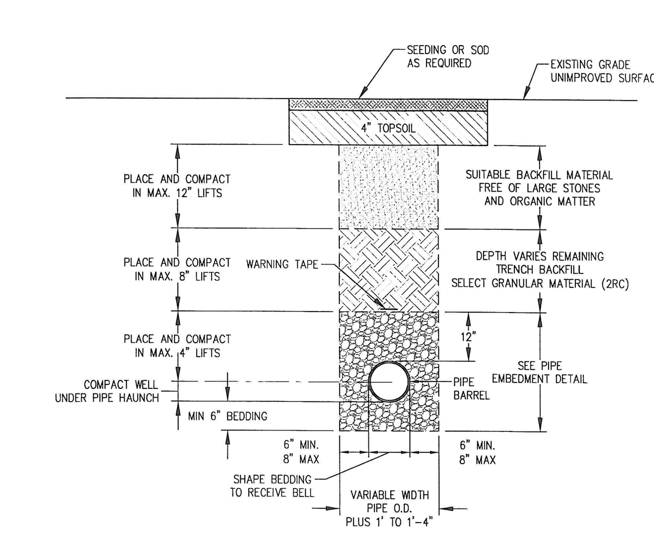

TRENCH RESTORATION IN LAWN AND FIELD AREAS
CONSTRUCTION DETAIL G-11A

Ebert Engineering, Inc.
Water and Wastewater Engineering
PO Box 540
4092 Skippack Pike, Suite 202
Skippack, PA 19474
Phone (610) 584 6701
Fax (610) 584 6704
E-mail febert@ebertengineering.com

DETAIL G-11A
TRENCH RESTORATION IN LAWN AND FIELD AREAS
SCHWENKSVILLE BOROUGH AUTHORITY
DATE | REVISION

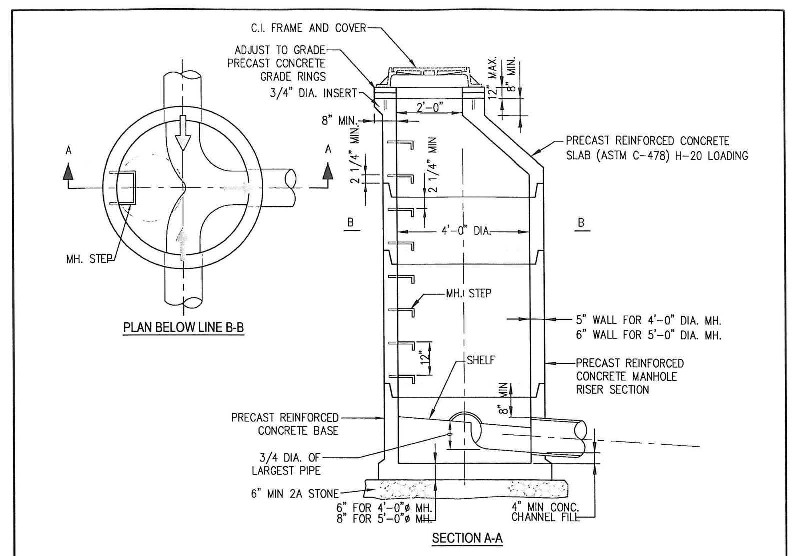

NOTES:
1. THE DEPTH OF THE INVERT CHANNEL SHALL BE EQUAL TO 1/2 OF THE DIAMETER OF THE SEWER.
2. THE SHELF SHALL SLOPE TOWARD THE INVERT CHANNEL AT A RATE OF 1" PER FOOT.
3. TYPE "B" MANHOLES (SHALLOW TYPE) TO BE PROVIDED WHERE REQUIRED BY DEPTH CONDITIONS. ALL OTHER MANHOLES TO BE TYPE "A"
4. FOR MANHOLES HAVING 5' DIAMETER BASE, REDUCTION IN DIAMETER TO 4' SHALL START AT THE FIRST JOINT ABOVE THE UPPERMOST PIPE CONNECTION TO WALL WHERE DEPTH IS SUFFICIENT.
5. ALL MANHOLE FRAMES SHALL BE BOLTED TO THE CONE SECTION OR CONCRETE SLAB WITH 4 - 3/4" DIAMETER BOLTS WITH WASHERS AND NUTS. BOLTS TO BE AT 90° ON A 36" DIA. BOLT CIRCLE.
6. ALL CONCRETE SHALL BE 4000 P.S.I. MINIMUM.
7. A WHITE EPOXY COATING SHALL BE APPLIED TO THE ENTIRE INTERIOR CONCRETE SURFACE OF THE MANHOLE. THE COATING SHALL CONSIST OF TWO (2) COATS, EACH EIGHT (8) MILS THICK, OF HIPPO-POXY COATING 52 SERIES, #52-W-23 BY M.A.B. PAINTS OR APPROVED EQUAL. ENTIRE OUTSIDE SURFACE OF MANHOLE SHALL RECEIVE TWO COATS OF BITUMINOUS COATING. KOPPERS 300M OR APPROVED EQUAL.
8. INSTALL DOUBLE RING OF PLASTIC PREFORMED JOINT SEALANT BETWEEN ALL SECTIONS AND UNDER FRAME.
9. MANHOLE CONSTRUCTION SHALL BE IN ACCORDANCE WITH ASTM C-478.
10. STEPS TO BE STEEL REINFORCED POLYPROPYLENE. (SEE DETAIL S-7)
11. 4' DIAMETER MANHOLE FOR 8" TO 15" PIPES, 5' DIAMETER MANHOLE FOR 18" TO 27" PIPES

STANDARD MANHOLE TYPE "A"
CONSTRUCTION DETAIL S-1

Ebert Engineering, Inc.
Water and Wastewater Engineering
PO Box 540
4092 Skippack Pike, Suite 202
Skippack, PA 19474
Phone (610) 584 6701
Fax (610) 584 6704
E-mail febert@ebertengineering.com

DETAIL S-1
STANDARD MANHOLE TYPE "A"
SCHWENKSVILLE BOROUGH AUTHORITY
DATE | REVISION

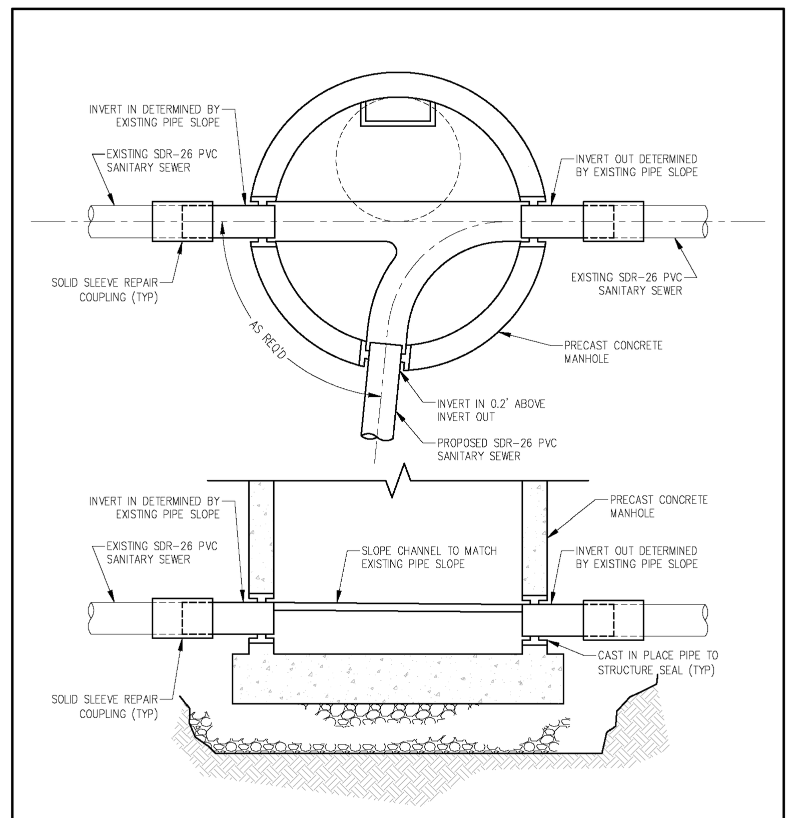

NOTES:
1. SEE DETAILS S-1, S-2 OR S-3 FOR OTHER MANHOLE FEATURES.
2. SEE DETAIL S-4 FOR CAST IN PLACE DOGHOUSE MANHOLE DETAILS.

PRECAST MANHOLE CONNECTION TO EXISTING SANITARY SEWER
CONSTRUCTION DETAIL S-4B

Ebert Engineering, Inc.
Water and Wastewater Engineering
PO Box 540
4092 Skippack Pike, Suite 202
Skippack, PA 19474
Phone (610) 584 6701
Fax (610) 584 6704
E-mail febert@ebertengineering.com

DETAIL S-4B
PRECAST MANHOLE CONNECTION TO EXISTING SANITARY SEWER
SCHWENKSVILLE BOROUGH AUTHORITY
DATE | REVISION

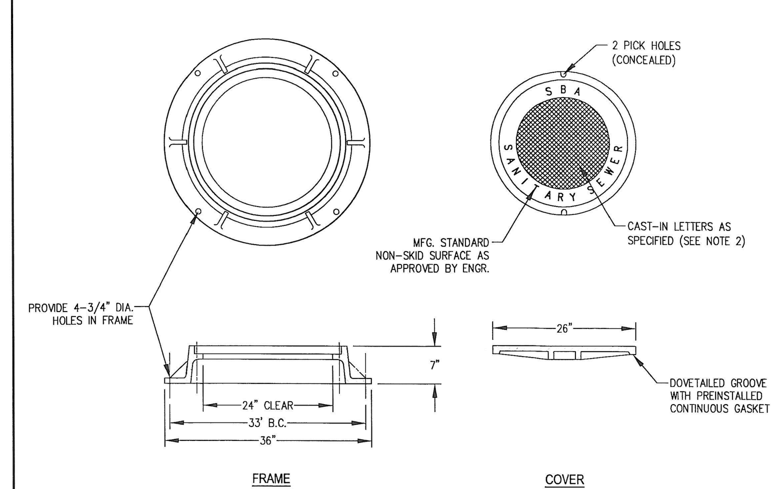

NOTES:
1. ALL MATERIAL SHALL BE GRAY CAST IRON, A.S.T.M. A 48-83 CL30 SUITABLE FOR HIGHWAY LOADING.
2. COVER SHALL HAVE THE WORDS "SBA SEWER" CAST THEREON. FOR WATER CHAMBERS, THE INSCRIPTION SHALL BE "WATER" INSTEAD OF "SEWER".
3. PROVIDE FOUR (4) ANCHOR BOLT HOLES, 3/4" DIA. MINIMUM.
4. MANUFACTURED BY NEENAH FOUNDRY COMPANY OR APPROVED EQUAL. * STANDARD: MODEL R-1642

STANDARD MANHOLE FRAME AND COVER
CONSTRUCTION DETAIL S-5

Ebert Engineering, Inc.
Water and Wastewater Engineering
PO Box 540
4092 Skippack Pike, Suite 202
Skippack, PA 19474
Phone (610) 584 6701
Fax (610) 584 6704
E-mail febert@ebertengineering.com

DETAIL S-5
STANDARD MANHOLE FRAME AND COVER
SCHWENKSVILLE BOROUGH AUTHORITY
DATE | REVISION

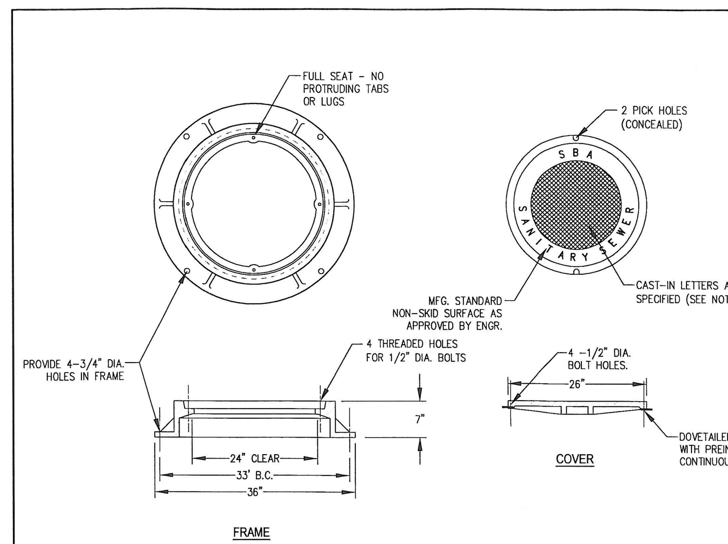

NOTES:
1. ALL MATERIAL GRAY CAST IRON, A.S.T.M. A-48, CL-30 SUITABLE FOR HIGHWAY LOADING.
2. COVER SHALL HAVE THE WORDS "SBA SEWER" CAST THEREON. FOR WATER CHAMBERS, THE INSCRIPTION SHALL BE "WATER" INSTEAD OF "SEWER".
3. FRAMES SHALL BE WATERPROOF AND COVER SHALL BE BOLTED WITH FOUR (4) 1/2" COUNTERSUNK STAINLESS STEEL BOLTS MAKING A SEAL WITH A RUBBER "O" RING GASKET, OR EQUAL
4. PROVIDE FOUR (4) S.S. ANCHOR BOLT HOLES, 3/4" DIA. MINIMUM.
5. MANUFACTURED BY NEENAH FOUNDRY COMPANY (MODEL R-1916-F) OR APPROVED EQUAL.

WATERTIGHT MANHOLE FRAME AND COVER
CONSTRUCTION DETAIL S-6

Ebert Engineering, Inc.
Water and Wastewater Engineering
PO Box 540
4092 Skippack Pike, Suite 202
Skippack, PA 19474
Phone (610) 584 6701
Fax (610) 584 6704
E-mail febert@ebertengineering.com

DETAIL S-6
WATERTIGHT STANDARD MANHOLE FRAME AND COVER
SCHWENKSVILLE BOROUGH AUTHORITY
DATE | REVISION

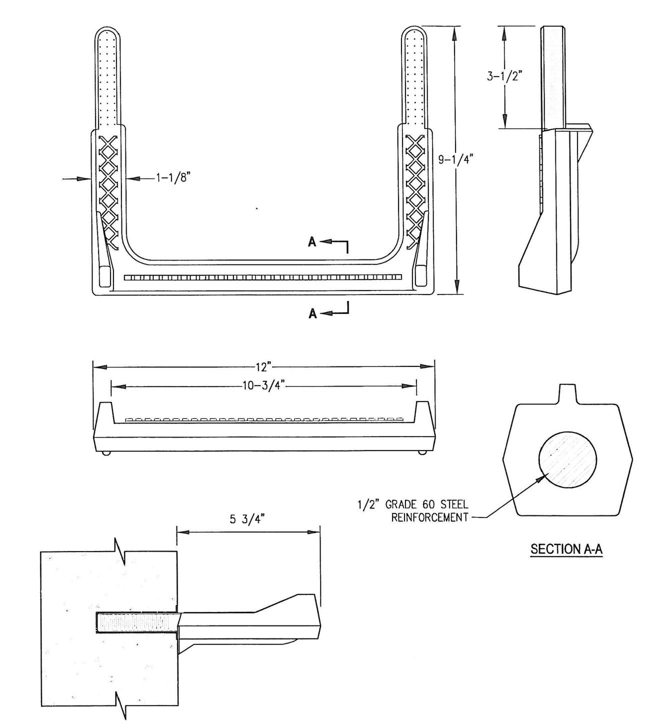

NOTE:
STEPS TO BE FABRICATED FROM COPOLYMER POLYPROPYLENE PLASTIC

STANDARD MANHOLE STEP
CONSTRUCTION DETAIL S-7

Ebert Engineering, Inc.
Water and Wastewater Engineering
PO Box 540
4092 Skippack Pike, Suite 202
Skippack, PA 19474
Phone (610) 584 6701
Fax (610) 584 6704
E-mail febert@ebertengineering.com

DETAIL S-7
STANDARD MANHOLE STEP
SCHWENKSVILLE BOROUGH AUTHORITY
DATE | REVISION

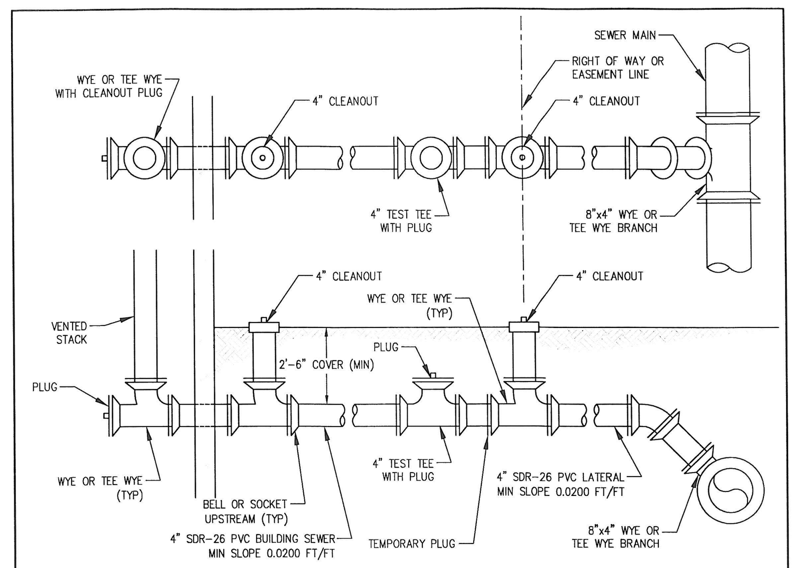

NOTES:
1. BUILDING SEWER FROM RIGHT OF WAY LINE TO BUILDING PLUMBING SYSTEM SHALL CONFORM TO THE INTERNATIONAL PLUMBING CODE ADOPTED BY TOWNSHIP.
2. TEMPORARY PLUG TO REMAIN IN LATERAL UNTIL CONSTRUCTION OF BUILDING SEWER OCCURS. BUILDING SEWER SHALL BE PLUGGED AT TEST TEE UNTIL CONSTRUCTION IS COMPLETED AND TESTED.
3. PIPE TO BE EMBEDDED IN 1B STONE OR SCREENINGS AS PER ENGINEER.
4. VENTED TRAP IS NOT REQUIRED ON NEW CONSTRUCTION.
5. A VENTED TRAP SHALL BE PROVIDED AT THE RIGHT OF WAY LINE ON EXISTING HOMES CONNECTING TO THE SANITARY SEWER SYSTEM.
6. CLEANOUT TO BE LOCATED AT RIGHT OF WAY THEN AT EVERY 50' INTERVALS FOR 4" PVC PIPE AND 100' INTERVALS FOR 6" PVC PIPE.

SERVICE CONNECTION SHALLOW SEWER
CONSTRUCTION DETAIL S-8

Ebert Engineering, Inc.
Water and Wastewater Engineering
PO Box 540
4092 Skippack Pike, Suite 202
Skippack, PA 19474
Phone (610) 584 6701
Fax (610) 584 6704
E-mail febert@ebertengineering.com

DETAIL S-8
SERVICE CONNECTION SHALLOW SEWER
SCHWENKSVILLE BOROUGH AUTHORITY
DATE | REVISION

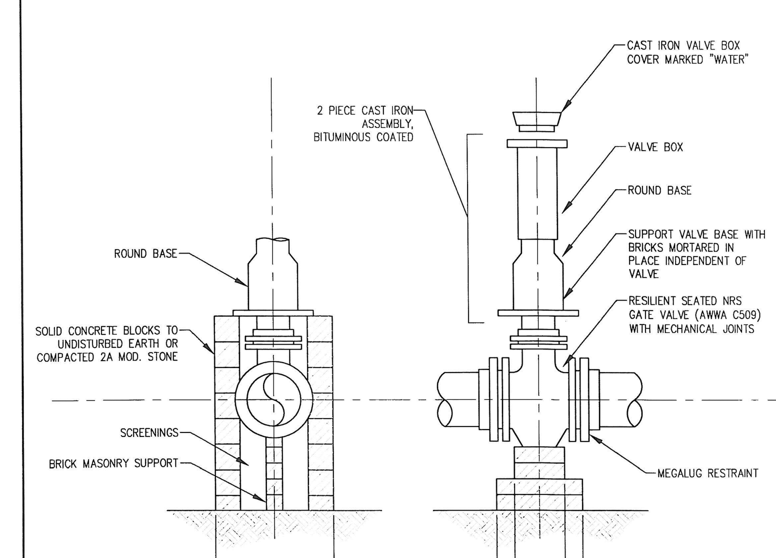

SIZE OF VALVE	DIMENSIONS (IN.) A	B	C
12"	24	8	14
10"	24	8	14
8"	20	6	12
6"	8	4	10
4"	8	4	10

GATE VALVE AND BOX
CONSTRUCTION DETAIL W-1

Ebert Engineering, Inc.
Water and Wastewater Engineering
PO Box 540
4092 Skippack Pike, Suite 202
Skippack, PA 19474
Phone (610) 584 6701
Fax (610) 584 6704
E-mail febert@ebertengineering.com

DETAIL W-1
GATE VALVE AND BOX
SCHWENKSVILLE BOROUGH AUTHORITY
DATE | REVISION

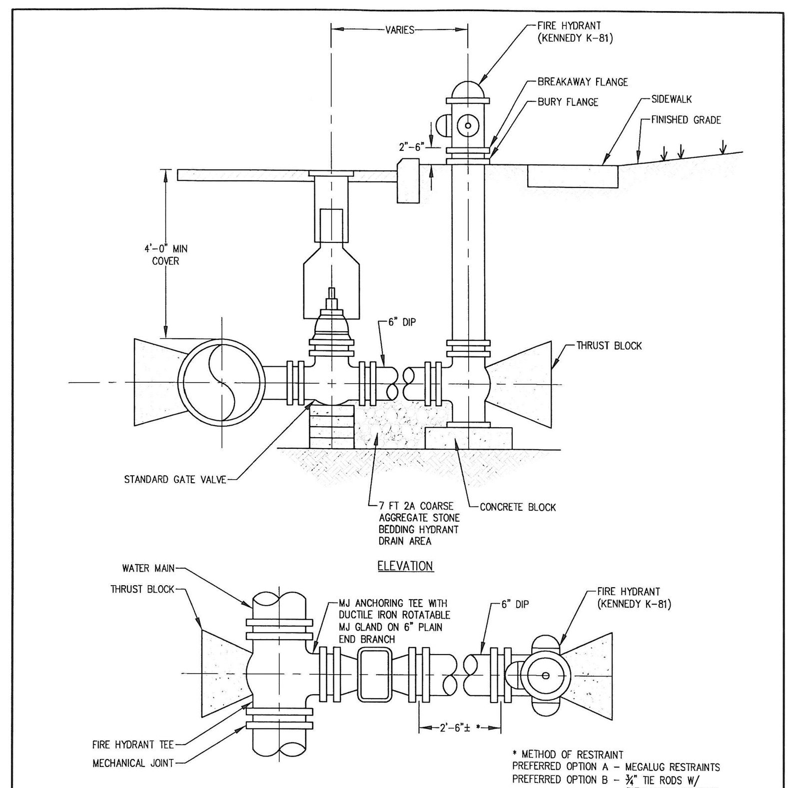

NOTE:
WHERE NO CURB EXISTS, THE FIRE HYDRANT SETBACK DISTANCE FROM EDGE OF ROAD SHALL BE AS DIRECTED BY THE AUTHORITY.

FIRE HYDRANT ASSEMBLY
CONSTRUCTION DETAIL W-2

Ebert Engineering, Inc.
Water and Wastewater Engineering
PO Box 540
4092 Skippack Pike, Suite 202
Skippack, PA 19474
Phone (610) 584 6701
Fax (610) 584 6704
E-mail febert@ebertengineering.com

DETAIL W-2
GATE VALVE AND BOX
SCHWENKSVILLE BOROUGH AUTHORITY
DATE | REVISION

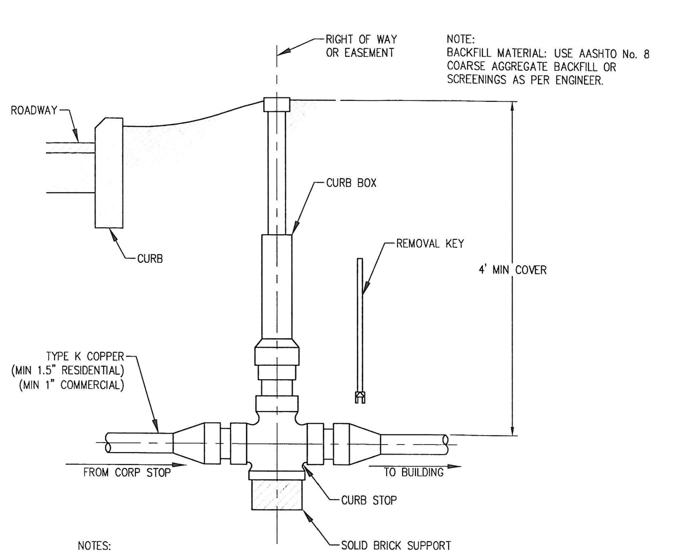

NOTE:
BACKFILL MATERIAL: USE AASHTO No. 8 COARSE AGGREGATE BACKFILL OR SCREENINGS AS PER ENGINEER.

NOTES:
1. LOCATE CURB BOX AT RIGHT-OF-WAY OR EASEMENT LINE.
2. CURB BOX SHALL NOT BE LOCATED IN PAVED AREAS.
3. CURB STOP MANUFACTURED BY A.Y. McDONALD COMPANY (MODEL # 6100I) OR APPROVED EQUAL.
4. CURB BOX MANUFACTURED BY A.Y. McDONALD COMPANY (SERIES # 5603 WITH 5601L LID) OR APPROVED EQUAL.
5. CURB BOX COVER SHALL NOT BE COVERED BY SOD, GRASS, OR PLANTINGS AND MUST BE FULLY ACCESSIBLE WITHOUT DIGGING. CURB BOX COVER SHALL BE PAINTED LIGHT BLUE AND INCLUDE THE INSCRIPTION "WATER".
6. CURB BOX MUST BE VERTICAL AND PLUMB.

CURB STOP AND BOX
CONSTRUCTION DETAIL W-5

Ebert Engineering, Inc.
Water and Wastewater Engineering
PO Box 540
4092 Skippack Pike, Suite 202
Skippack, PA 19474
Phone (610) 584 6701
Fax (610) 584 6704
E-mail febert@ebertengineering.com

DETAIL W-5
CURB STOP AND BOX
SCHWENKSVILLE BOROUGH AUTHORITY
DATE | REVISION

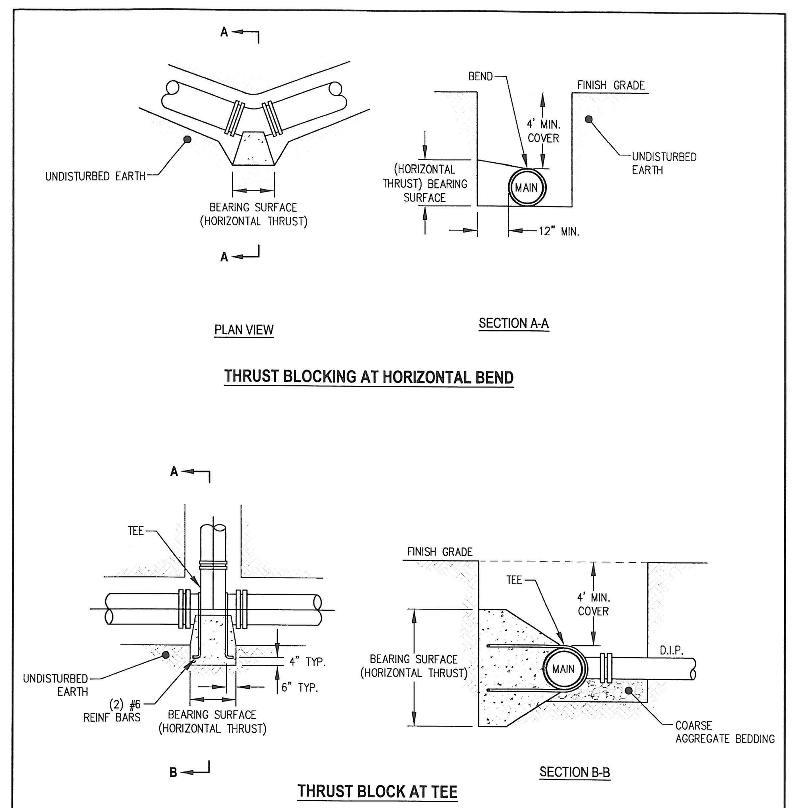

HORIZONTAL THRUST BLOCK ARRANGEMENT
CONSTRUCTION DETAIL W-8A

Ebert Engineering, Inc.
Water and Wastewater Engineering
PO Box 540
4092 Skippack Pike, Suite 202
Skippack, PA 19474
Phone (610) 584 6701
Fax (610) 584 6704
E-mail febert@ebertengineering.com

DETAIL W-8A
HORIZONTAL THRUST BLOCK ARRANGEMENT
SCHWENKSVILLE BOROUGH AUTHORITY
DATE | REVISION

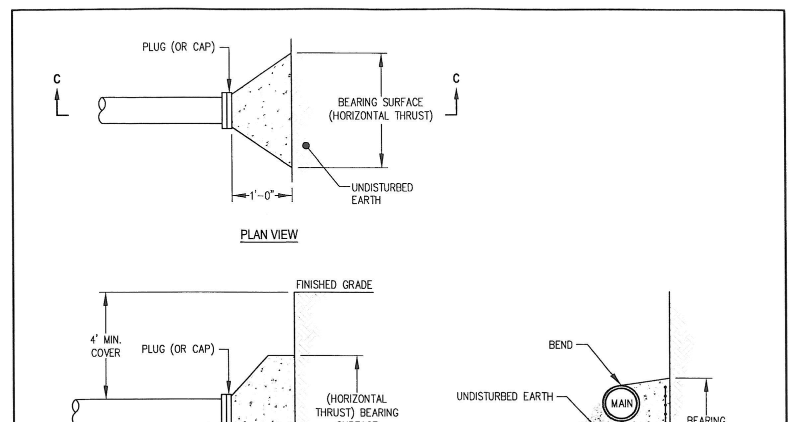

NOTES:
1. THE BEARING SURFACE(S) OF THE CONCRETE THRUST BLOCK MUST BEAR AGAINST UNDISTRUBED EARTH. THE BEARING AREA PROVIDED MUST BE IN ACCORDANCE WITH THE SCHEDULE ON DETAIL W-9.
2. THE CONCRETE THRUST BLOCK MUST EXTEND FROM BELL TO BELL ON FITTING BUT MUST NOT INTERFERE WITH ACCESS TO THE FITTING JOINT.
3. ALL CONCRETE SHALL HAVE A MINIMUM COMPRESSIVE STRENGTH OF 3300 PSI AT THE END OF 28 DAYS (PENNDOT CLASS A)
4. WHEN BEARING SURFACE IS GREATER THAN 10 SQUARE FEET, THRUST BLOCK SHALL INCLUDE REINFORCEMENT PARALLEL TO EACH BEARING SURFACE AS SHOWN IN THE DETAIL. ALL REINFORCEMENT BARS SHALL BE DEFORMED BARS.
5. ALL EXPOSED STEEL TO RECEIVE TWO (2) COATS OF BITUMASTIC.
6. MEG-A-LUGS SHALL BE INSTALLED ON ALL FITTINGS.
7. ALL M. J. BOLTS, ETS. TO BE COVERED WITH PLASTIC PRIOR TO CONCRETE PLACEMENT.

HORIZONTAL THRUST BLOCK ARRANGEMENT
CONSTRUCTION DETAIL W-8B

Ebert Engineering, Inc.
Water and Wastewater Engineering
PO Box 540
4092 Skippack Pike, Suite 202
Skippack, PA 19474
Phone (610) 584 6701
Fax (610) 584 6704
E-mail febert@ebertengineering.com

DETAIL W-8B
HORIZONTAL THRUST BLOCK ARRANGEMENT (CONT)
SCHWENKSVILLE BOROUGH AUTHORITY
DATE | REVISION

BEARING SURFACE REQUIRED - Sq. Ft.
HORIZONTAL THRUST BLOCKING AND VERTICAL THRUST DOWNWARD
100 P.S.I. WORKING PRESSURE

PIPE SIZE	4" 6" 8"				10" AND 12"				16" 18" 20"				24"			
TYPE OF BEARING MATERIAL AND ALLOWABLE LOADS	DEGREE OF BEND OR DEFLECTION															
	22.5°	45°	90°	D.E.	22.5°	45°	90°	D.E.	22.5°	45°	90°	D.E.	22.5°	45°	90°	D.E.
SAND 0.75 TON/SQ.FT.	3.4	6.0	11.0	6.4	6.7	12.8	23.4	14.2	14.8	28.8	52.9	34.4	26.1	48.3	89.7	64.0
SOFT CLAY 1 TON/SQ.FT.	2.6	4.6	8.2	4.8	5.0	9.6	17.5	10.7	11.2	21.7	39.7	28.2	19.6	36.3	67.3	48.0
SAND AND GRAVEL 2 TON/SQ.FT.	1.3	2.3	4.1	2.4	2.5	4.8	8.8	5.3	5.6	10.8	20.0	14.1	9.8	13.1	33.6	24.0
CLAY 4 TON/SQ.FT.	1.0	1.2	2.1	1.3	1.3	2.4	4.4	2.7	2.8	5.4	10.0	7.2	4.9	9.1	16.8	12.0
SOFT ROCK 5 TON/SQ.FT.	1.0	1.0	1.6	1.0	1.0	1.9	3.5	2.2	1.6	4.4	8.0	5.7	3.9	7.3	13.5	9.6
ROCK 15 TON/SQ.FT.	1.0	1.0	1.0	0.4	1.0	1.0	1.2	0.8	1.0	1.4	2.6	1.9	1.3	2.4	4.5	3.2
PIPE SIZE	30"				36"				42"				48"			
TYPE OF BEARING MATERIAL AND ALLOWABLE LOADS	DEGREE OF BEND OR DEFLECTION															
	22.5°	45°	90°	D.E.	22.5°	45°	90°	D.E.	22.5°	45°	90°	D.E.	22.5°	45°	90°	D.E.
SAND 0.75 TON/SQ.FT.	40.3	76.5	139	99.1	55.5	107.5	197.5	140.0	74.3	144.7	266.5	188.7	83.2	182.3	336.2	238.0
SOFT CLAY 1 TON/SQ.FT.	30.2	57.4	104.3	74.3	41.6	80.6	148.0	105.0	55.7	108.5	200.0	141.6	70.0	136.7	252.2	178.0
SAND AND GRAVEL 2 TON/SQ.FT.	15.1	28.7	52.1	37.2	20.8	40.3	74.0	52.5	27.9	54.3	100.0	70.8	35.0	68.3	126.1	89.2
CLAY 4 TON/SQ.FT.	7.6	14.6	26.0	18.6	10.4	20.2	37.0	26.3	14.0	27.0	50.0	35.3	17.5	34.2	63.0	44.6
SOFT ROCK 5 TON/SQ.FT.	6.0	11.5	20.9	14.9	8.3	16.1	29.6	21.0	11.2	21.7	40.0	28.3	14.0	27.3	50.4	35.7
ROCK 15 TON/SQ.FT.	2.0	3.8	7.0	5.0	1.4	2.8	5.4	7.0	3.7	7.2	13.3	9.4	4.7	9.1	16.8	12.0

MIN. SQUARE FEET OF BEARING SURFACE REQUIRED FOR HORIZONTAL THRUST BLOCKING AND VERTICAL THRUST DOWNWARD

NOTES:
1. THIS CHART HAS BEEN DEVELOPED FOR D.I.P. WITH 100 P.S.I. WORKING PRESSURE, A 50% SURGE PRESSURE INCREASE, AND A 1.5 SAFETY FACTOR. CASE SPECIFIC CALCULATIONS ARE REQUIRED WHERE WORKING PRESSURE EXCEEDS 100 P.S.I AND/OR SURGE PRESSURE EXCEEDS 50% WORKING PRESSURE.
2. D.E. = DEAD END
3. MINIMUM THRUST BLOCK AREA IS 1.0 SQ. FEET.
4. MEGALUG RESTRAINT SHALL BE INSTALLED AT ALL FITTINGS.

HORIZONTAL AND VERTICAL DOWNWARD THRUST BLOCK BEARING SURFACE AREA SCHEDULE
CONSTRUCTION DETAIL W-9

Ebert Engineering, Inc.
Water and Wastewater Engineering
PO Box 540
4092 Skippack Pike, Suite 202
Skippack, PA 19474
Phone (610) 584 6701
Fax (610) 584 6704
E-mail febert@ebertengineering.com

DETAIL W-9
HORIZONTAL AND VERTICAL DOWNWARD THRUST BLOCK BEARING SURFACE AREA SCHEDULE
SCHWENKSVILLE BOROUGH AUTHORITY
DATE | REVISION

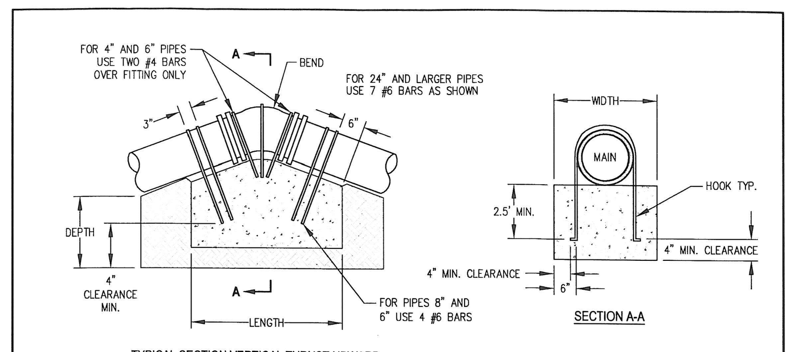

NOTES:
1. ALL CONCRETE SHALL HAVE A MINIMUM COMPRESSIVE STRENGTH OF 3300 P.S.I. AT THE END OF 28 DAYS. (PENNDOT CLASS A)
2. ALL REINFORCING STEEL SHALL BE DEFORMED BARS. (ASTM GRADE 60) AND SHALL BE U-SHAPED AROUND WATER MAIN.
3. ALL FITTINGS AND JOINTS SHALL BE COVERED WITH POLYETHYLENE FILM BEFORE PLACING CONCRETE.
4. ALL EXPOSED STEEL SHALL BE COVERED WITH 2 COATS OF BITUMASTIC, KOPPER 300M OR APPROVED EQUAL.

CONCRETE BLOCKING DIMENSIONS, VERTICAL THRUST UPWARD
100 P.S.I. WORKING PRESSURE

PIPE SIZES	LENGTH			WIDTH			DEPTH		
	11.25°	22.5°	45°	11.25°	22.5°	45°	11.25°	22.5°	45°
4", 6" AND 8"	3.5'	4.5'	6'	3'	3'	3'	2'	3'	4'
10" AND 12"	4.5'	7'	8'	3'	3'	4'	3'	4'	5'
14" AND 16"	4.5'	7'	9'	4.5'	4.5'	4.5'	3.5'	4'	5'
18" AND 20"	5'	7'	11.5'	5'	5'	5'	4'	5'	5.5'
24"	5'	9'	12.5'	5'	5'	6'	4.5'	5'	6'
30"	5.5'	9'	13.5'	5.5'	6'	7'	5.5'	6'	7'
36"	6.5'	11'	14'	5.5'	6.5'	7'	6'	6.5'	7'
42"	9'	13.5'	15'	6'	7'	7'	6'	7'	7'
48"	10'	14'	16'	6'	7'	7'	6'	7'	7'

NOTES:
1. THIS CHART HAS BEEN DEVELOPED FOR D.I.P. WITH A 100 PSI WORKING PRESSURE. A 50% SURGE PRESSURE INCREASE AND 1.5 SAFETY FACTOR. CASE SPECIFIC CALCULATIONS ARE REQUIRED WHERE THE WORKING PRESSURE EXCEEDS 100PSI AND/OR SURGE PRESSURE EXCEEDS 50% OF WORKING PRESSURE.
2. FOR VERTICAL THRUST DOWNWARD, SEE DETAIL W-8 AND W-9.
3. INSTALL MEGALUGS ON ALL FITTINGS

VERTICAL THRUST BLOCK ARRANGEMENT AND DIMENSIONS SCHEDULE
CONSTRUCTION DETAIL W-10

Ebert Engineering, Inc.
Water and Wastewater Engineering
PO Box 540
4092 Skippack Pike, Suite 202
Skippack, PA 19474
Phone (610) 584 6701
Fax (610) 584 6704
E-mail febert@ebertengineering.com

DETAIL W-10
VERTICAL THRUST BLOCK ARRANGEMENT AND DIMENSIONS SCHEDULE
SCHWENKSVILLE BOROUGH AUTHORITY
DATE | REVISION

THIS DRAWING IS NOT TO BE USED FOR CONSTRUCTION UNLESS STAMPED: "ISSUED FOR CONSTRUCTION"

No.	REVISION	DATE
11	REVISED PER BOROUGH EMAIL COMMENTS (10/09/18)	OCTOBER 24, 2018
10	REVISED PER BOROUGH EMAIL COMMENTS (07/06/18) & 07/09/18)	AUGUST 16, 2018
9	REVISED PER BOROUGH LTR. (12/20/17), SEWER AUTH. LTR. (01/31/18)	JUNE 5, 2018
8	REVISED PER MCCD TECHNICAL REVIEW (03/12/18)	MAY 4, 2018
7	REVISED PER MCCD ADMINISTRATIVE INCOMPLETENESS REVIEW (01/09/18)	JANUARY 16, 2018
	(SEE COVER SHEET FOR COMPLETE LIST OF PLAN REVISION)	
	PLAN ORIGINATION DATE	JUNE 24, 2016

SANITARY SEWER DETAILS

AS PART OF

CENTENNIAL APARTMENTS

PREPARED FOR

HOFF PROPERTIES, LLC

SITE SITUATE IN
SCHWENKSVILLE BOROUGH, MONTGOMERY COUNTY, PA

Richard C. Mast Associates, P.C.
Consulting Engineers and Surveyors
www.rcmaonline.com
The Village at Lederach
658 Harleysville Pike, Suite 150
Harleysville, PA 19438
(215) 513-2100

DRAFTED BY	PROJ. MNGR.	PROJECT NO.	DRAWING NO.
R.A.F.	D.B.C.	2800	20 OF 22

Q:\ProjectAdmin\2800 Series\2800 Hoff - Centennial Street Apartments\6 Project CAD Files\2800 18 DET

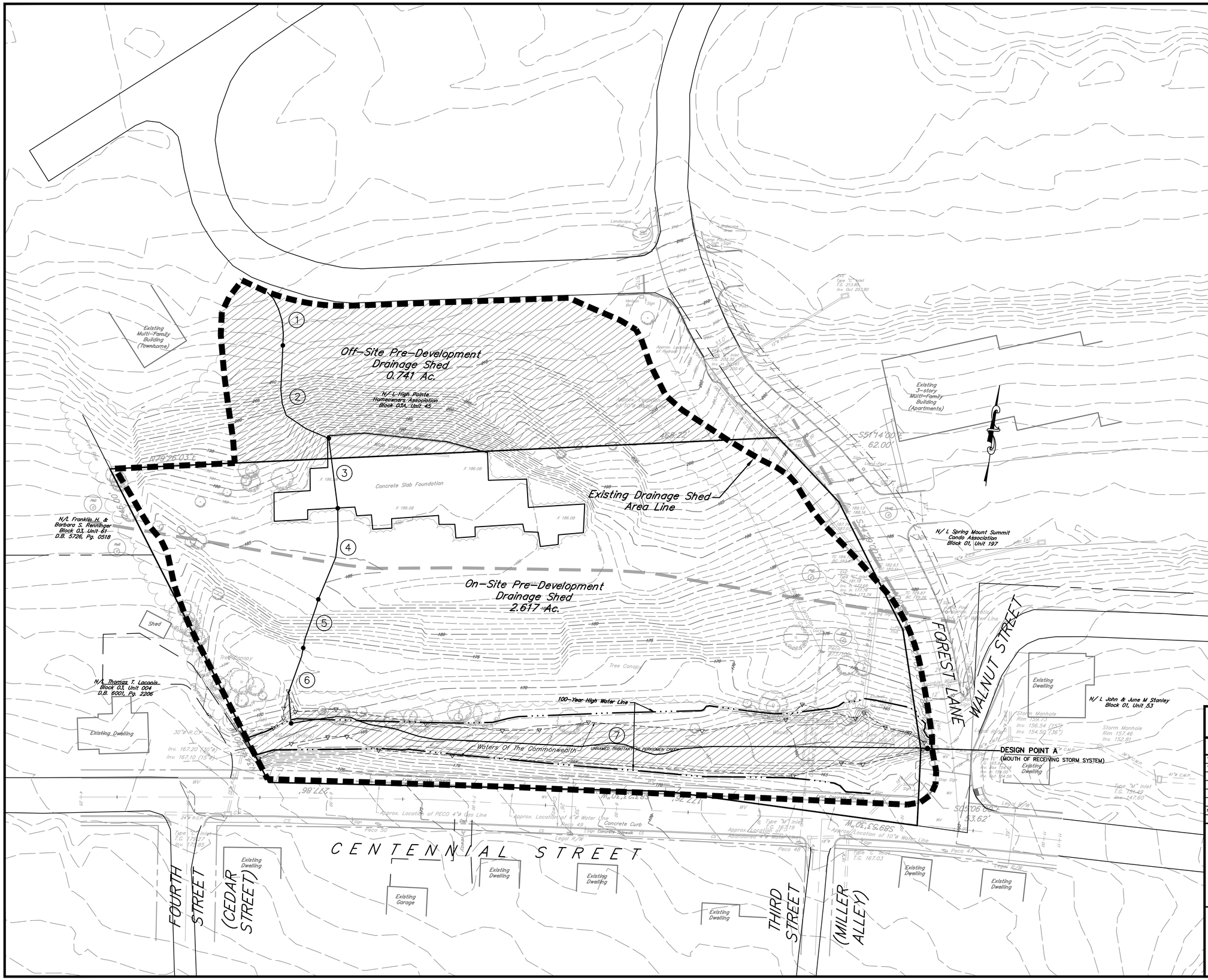

SITE LOCATION MAP

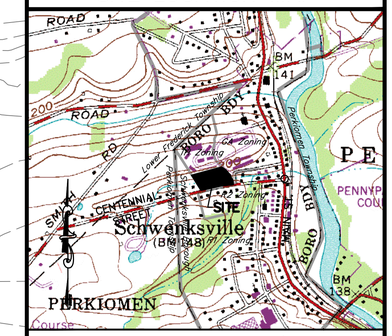

U.S.G.S. PERKIOMENVILLE QUADRANGLE 7.5' SERIES
SCALE: 1"=1000'

SOILS DATA

SOILS DATA WAS OBTAINED FROM A SOIL SURVEY OF MONTGOMERY COUNTY, PENNSYLVANIA, BY THE NATURAL RESOURCES CONSERVATION SERVICE, THROUGH THE WEB SOIL SURVEY DATABASE.

PkD PENN-KLINESVILLE CHANNERY SILT LOAMS, 15 TO 25 PERCENT SLOPES, WELL DRAINED, MODERATELY RAPID PERMEABILITY, RAPID RUNOFF CHARACTERISTICS, LOW AVAILABLE WATER CAPACITY, SEVERE EROSION HAZARD.
RESTRICTIONS – POORLY SUITED-SLOPE AND DEPTH TO BEDROCK.

ReB READINGTON SILT LOAM, 3 TO 8 PERCENT SLOPES
RESTRICTIONS – FROST ACTION, DEPTH TO SATURATED ZONE, CUTBANKS CAVE DEPTH TO HARD BEDROCK.

LEGEND

TIME OF CONCENTRATION PATH
EXISTING DRAINAGE SHED
EXISTING INLET SHED

30 0 15 30 60 90
DRAWING SCALE: 1"= 30 '

THIS DRAWING IS NOT TO BE USED FOR CONSTRUCTION UNLESS STAMPED: "ISSUED FOR CONSTRUCTION"

No.	REVISION	DATE
11	REVISED PER BOROUGH EMAIL COMMENTS (10/09/18)	OCTOBER 24, 2018
10	REVISED PER BOROUGH EMAIL COMMENTS (07/06/18) & 07/09/18)	AUGUST 16, 2018
9	REVISED PER BOROUGH LTR. (12/20/17), SEWER AUTH. LTR. (01/31/18)	JUNE 5, 2018
8	REVISED PER MCCD TECHNICAL REVIEW (03/12/18)	MAY 4, 2018
7	REVISED PER MCCD ADMINISTRATIVE INCOMPLETENESS REVIEW (01/09/18)	JANUARY 16, 2018
	(SEE COVER SHEET FOR COMPLETE LIST OF PLAN REVISION)	
	PLAN ORIGINATION DATE	JUNE 24, 2016

PRE-DEVELOPMENT DRAINAGE SHED PLAN

AS PART OF

CENTENNIAL APARTMENTS

PREPARED FOR

HOFF PROPERTIES, LLC

SITE SITUATE IN

SCHWENKSVILLE BOROUGH, MONTGOMERY COUNTY, PA

RICHARD C. MAST ASSOCIATES, P.C.
RCMA

Richard C. Mast Associates, P.C.
Consulting Engineers and Surveyors
www.rcmaonline.com

The Village at Lederach
658 Harleysville Pike, Suite 150
Harleysville, PA 19438
(215) 513-2100

DRAFTED BY	PROJ. MNGR.	PROJECT NO.	DRAWING NO.
R.A.F.	D.B.C.	2800	21 OF 22

Q:\ProjectAdmin\2800 Series\2800 Hoff – Centennial Street Apartments\6 Project CAD Files\2800 21 XSHED

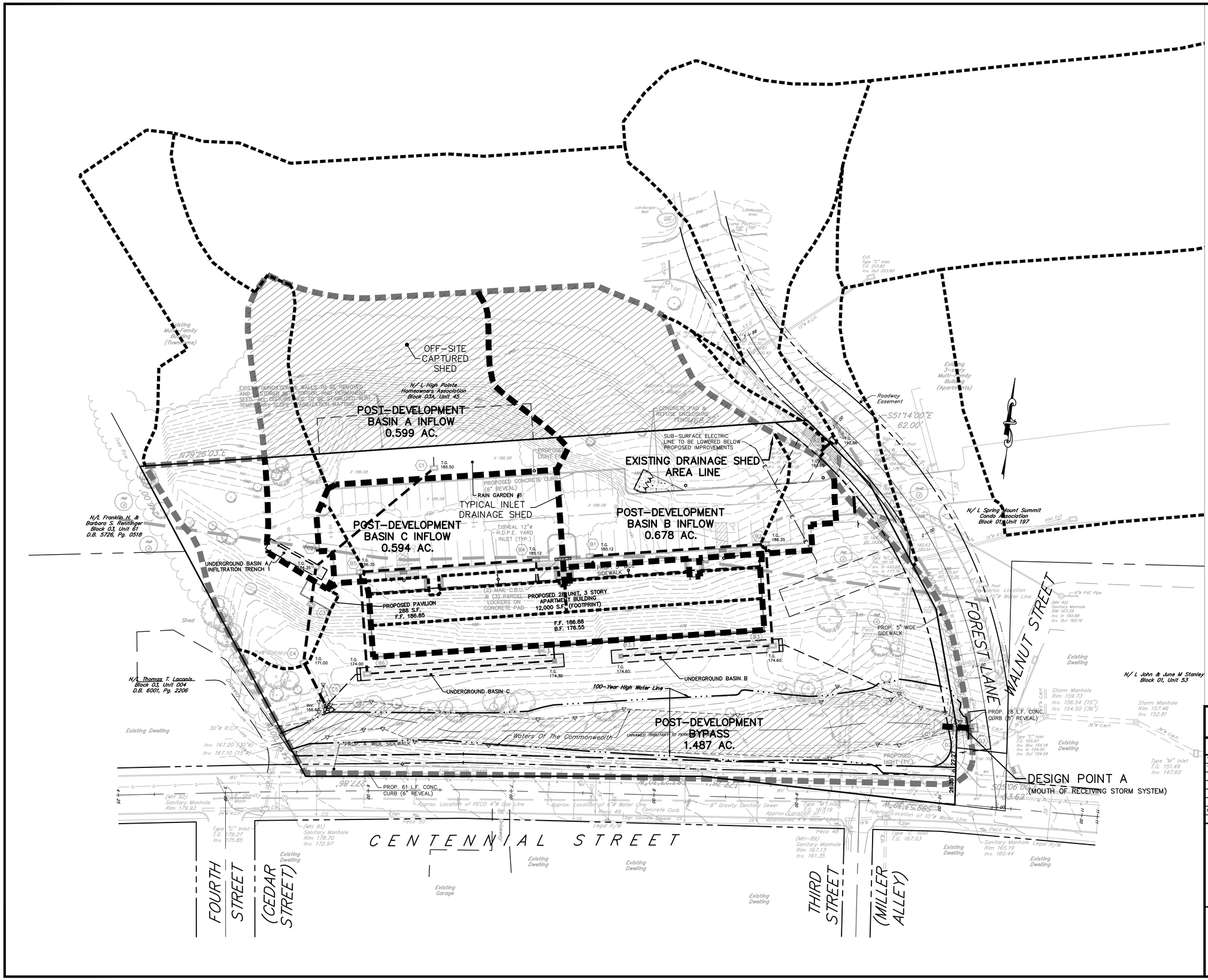

LEGEND

- DRAINAGE AREA LINE
- INLET DRAINAGE AREA LINE
- TIME OF CONCENTRATION PATH

30 0 15 30 60 90

DRAWING SCALE: 1"=30'

THIS DRAWING IS NOT TO BE USED FOR CONSTRUCTION UNLESS STAMPED: "ISSUED FOR CONSTRUCTION"

No.	REVISION	DATE
11	REVISED PER BOROUGH EMAIL COMMENTS (10/09/18)	OCTOBER 24, 2018
10	REVISED PER BOROUGH EMAIL COMMENTS (07/06/18) & 07/09/18)	AUGUST 16, 2018
9	REVISED PER BOROUGH LTR. (12/20/17), SEWER AUTH. LTR. (01/31/18)	JUNE 5, 2018
8	REVISED PER MCCD TECHNICAL REVIEW (03/12/18)	MAY 4, 2018
7	REVISED PER MCCD ADMINISTRATIVE INCOMPLETENESS REVIEW (01/09/18)	JANUARY 16, 2018
	(SEE COVER SHEET FOR COMPLETE LIST OF PLAN REVISION)	
	PLAN ORIGINATION DATE	JUNE 24, 2016

POST-CONSTRUCTION DRAINAGE SHED PLAN

AS PART OF

CENTENNIAL APARTMENTS

PREPARED FOR

HOFF PROPERTIES, LLC

SITE SITUATE IN

SCHWENKSVILLE BOROUGH, MONTGOMERY COUNTY, PA

RICHARD C. MAST ASSOCIATES, P.C.

Richard C. Mast Associates, P.C.

Consulting Engineers and Surveyors

www.rcmaonline.com

The Village at Lederach
658 Harleysville Pike, Suite 150
Harleysville, PA 19438
(215) 513-2100

DRAFTED BY	PROJ. MNGR.	PROJECT NO.	DRAWING NO.
R.A.F.	D.B.C.	2800	22 OF 22

G:\ProjectAdmin\2800 Series\2800 Hoff - Centennial Street Apartments\6 Project CAD Files\2800 22 ESHED