Project #20-054
In-N-Out Burger
Located at 404 North Main Street

REPORT SUMMARY...

Project Name:	In-N-Out Burger
Proponent / Owner:	Cassie Yee (In-N-Out) / Logan Main and 4th Pads LLC
Project Address:	100 W 100 S
Request:	Design Review Permit
Current Zoning:	Town Center 1 (TC-1)
Type of Action:	Quasi-Judicial
Date of Hearing:	November 12, 2020
Submitted By:	Russ Holley, Senior Planner

RECOMMENDATION

Staff recommends that the Planning Commission **conditionally approve** a Design Review Permit for Project #20-054, In-N-Out Burger, for a property located at 404 North Main Street, TIN# 06-042-0010.

Current Land use adjoining the subject property

North:	TC-1: Commercial Uses	*East:*	TC-1: Commercial Uses
South:	TC-1: Commercial Uses	*West:*	TC-1: Commercial Uses

PROJECT PROPOSAL

The 0.86-acre project site consists of a recently demolished gas station, car wash and asphalt parking lot. The flat site at the northeast corner of the intersection of Main Street and 400 North has existing curb, gutter and sidewalk along the entire frontage. The proposed project includes a new single-story 3,879 fast-food restaurant, drive-thru lane, paved parking lot and landscaping. The proposal places the building near the intersection with the drive-thru lane wrapping the structure in a counter-clockwise direction. The primary entrance, outdoor dining, trash enclosures and paved parking areas are proposed to the east of the project site.

Figure 1 shows the proposed project

LAND USE

The project area is zoned Town Center 1 (TC-1). TC-1 zone has been established to encourage a mix of retail, office, commercial, entertainment, residential, and civic uses within a compact, walkable urban form concentrated at the core of Logan City. A fast food restaurant is a "permitted" land use within the TC-1 zoning district.

DESIGN REVIEW

The Land Development Code (LDC) 17.43 requires Design Review Permit approval for commercial developments to ensure high-quality design, layout compatibility and uniform compliance with Logan City regulations. The Planning Commission may approve or conditionally approve a Design Review Permit upon substantiating findings in conformance with Title 17 of the LDC.

SITE DESIGN

The TC-1 zone is intended to accommodate dense urban development patterns with minimal setbacks and high lot coverages. Lot coverage is permitted to be up to 100%, building frontages are required to be a minimum 75% at the front setback. Open space and landscaping are only required when surface parking lots are proposed or for screening purposes.

Setbacks

The setback requirements in the TC-1 zone for commercial buildings are as follows:

Front (Min/Max):	0'-5'
Corner (Min/Max):	0'-5'
Side:	0'
Rear:	5'
Parking (Front):	10'
Parking (Side/Rear):	5'

The following setbacks are proposed (as measured from the exterior property lines of the project site, at closest points):

Front (Main Street):	4.6' (columns/portico), 22' (building)
Corner (400 N.):	4.0' (columns/portico), 23' (building)
Side (North):	38'
Rear (East):	200'
Parking (Main Street):	NA
Parking (400 N):	8'-11' (angled property line)

As the intent of the zone is to promote an urban form, the applicant has proposed the building at the corner near the intersection. With the proposal containing a drive-thru lane and the associated functional and circulation requirements, the 0-5' setback is physically impossible. Considering this, the applicant has proposed overhead portico structures along both streets that partially enclose the drive-thru and provide building massing within the setback range. The portico is proposed at approximately 22' wide along Main Street and approximately 44' wide along 400 North. Staff recommends that the portico along Main Street be widened to provide massing/structure closer to the street. All other setbacks comply as proposed. As conditioned, with portico additions along Main Street, the project complies with setbacks.

Access & Circulation

The existing two vehicle accesses to this property from Main Street and 400 North are proposed to close and access to the new fast-food restaurant be gained through cross-access easements throughout the block perimeter. There are six (6) driveway locations that can access this proposed building, two on Main Street, one on 500 North, two on 100 East and one on 400 North. These other driveway locations are farther away from street intersections and create less vehicle conflicts because of increased horizontal distances. Once inside the block, vehicle

circulation and parking will occur east of the proposed building. The proposal shows new parking stalls at 90-degree angles with other existing areas of the block showing 45-degree angled parking. These two parking layouts are incompatible and pose vehicle circulation problems. Pedestrian circulation is required for commercial projects by code and is provided via the sidewalks along Main Street, 400 North and a new connecting sidewalk to the primary entrance across the drive-thru lane along the south façade. As conditioned with cross-access and consistent parking angles for adjacent parking stalls and drive isles, the project meets access and circulation requirements.

Parking

The LDC requires one (1) parking stall for every 75 SF of dining room for a fast food restaurant. The proposed fast-food restaurant is shown with a dining area of approximately 2,500 SF. This building would be required to provided 33 parking stalls. The proposed project provides 50 parking stalls, meeting the LDC requirement. The LDC also requires a bike rack for new restaurants. The proposed project provides a new bike rack near the north side of the building. As proposed, the proposed project meets the minimum parking requirements in the LDC.

Landscaping

The LDC 17.10.060 does not require landscaping unless surface parking lots are proposed, or utility areas require green screening. When surface parking lots are proposed, the LDC 17.32.070.C requires 18 SF of landscaping per every stall contained within. The parking lot landscaping can be placed on the interior or directly adjacent to the parking lot to break up the expanse of blank asphalt. With 50 stalls proposed, 900 SF of landscaping is required. The proposal includes interior planting islands and landscaping beds directly adjacent to the parking lot totaling more than 900 SF. Because of the drive-thru location, additional landscaping can be used to help screen and buffer that utility from public view. As conditioned with minimum parking lot landscaping and landscape buffers along the drive-thru, the project meets the landscaping standards in the LDC.

Signage

The LDC 17.33 regulates signage within the City of Logan. Pole signs are currently only allowed to be 14 feet tall. This property has an existing pole sign that is approximately 25 feet tall. Since it was permitted under the 1993 code version, it is considered legally existing nonconforming (grandfathered). If a legally existing sign is abandoned and ceases to be used for more than 90 days, then the grandfathering status is lost. The Utah Department of Transportation acquired additional property at this intersection placing this sign on public right-of-way property. Staff recommends that the private sign move off the public right-of-way. As conditioned with this sign following abandonment and grandfathering regulations and moving onto private property, the sign complies with the LDC.

BUILDING DESIGN

Materials

The LDC 17.12.020 states that a mixture of building materials is required for all building elevations. Permitted materials include masonry, stucco, wood, fiber cement board, or metal. Stucco (EIFS) is permitted when sufficient detail, scoring and interest is provided to the surface. The proposed building materials include stucco with metal trim and windows. As conditioned with a secondary building material approved in the TC zoning district, project meets the requirements in the LDC.

Transparency

Transparency requirements for the TC-1 zone require ground floor frontage (street facing) commercial space to contain 60% transparency (fenestration). For this project site, the west and south façades are considered street facing frontages. The proposal shows a group of windows on the south elevation and a window on the west elevation. These façades also contain a series of columns forming a portico. The south side portico is shown with three columns and four

openings and the west side portico is shown with two columns and one opening. If counted towards transparency, the openings on the south side total 300 SF and the opening on the west side total 100 SF. Considering building width and a 12 foot ground-floor code height, the south side would require 400 SF of transparency and the west side would require 500 SF of transparency (60% of ground floor wall area). As conditioned with additional transparency, the project meets the LDC requirements.

Figure 2 shows the east façade

Building Orientation

The LDC 17.12.030 states that building's and primary entrances should be oriented towards the street. In situations where the primary entrance is not oriented towards the street, the street facing façade shall have similar façade treatments/details/style found on the façade containing the primary entrance. The proposal shows the building location near the intersection in a prominent position emphasizing architecture over asphalt along street frontages. This position helps to frame one of the busiest intersections in the valley with architecture. The orientation and primary entrance are shown towards the east (parking lot). This façade contains windows, awnings, entryways and roof variations. For code compliance, similar features should be found on the west/south façade. As conditioned with similar architectural features found on both the primary entrance facade and the street façade, the project meets the LDC requirements.

Building Height

Building height in the TC-1 zone are limited to 55' along any street facing property line and may be increased at a ratio of 1 vertical foot for every 2 horizontal feet up to a maximum height of 80'. This single-story fast food restaurant is shown with a maximum building height of 23 feet and complies with code requirements as submitted.

Lighting

The LDC 17.30.090 requires adequate and appropriate site lighting that increases nighttime visibility, adds aesthetic quality, and improves safety while mitigating unnecessary glare, sky glow and light trespass. The LDC limits pole height to 32 feet, and luminaire fixtures to be concealed source, down-cast and shielded from neighboring properties. Light measurements are required to range between 0.5 – 4.0-foot candles, so areas are sufficiently safe, but not excessively bright. Exterior lighting has not yet been submitted. As conditioned, the project complies with the requirements of the LDC.

SUMMARY

The Planning Commission has several areas of discretion to consider regarding the design of this project. Aesthetic based regulations, such as building placement, orientation, materials, fenestration and articulation, can be substantially adjusted as per LDC 17.43.080 by the Planning Commission based on findings of compatibility with surrounding land use patterns and community design. Form based requirements, such as setbacks, open space, height, lot coverage can only be adjusted up to 10% by the Planning Commission and based on findings of neighborhood compatibility. Based on the functional and space requirements of fast-food restaurants with drive-thru lanes, design discretion will need to be taken by the Planning Commission for this project to be approved. As long as similar discretion is given to similar projects and circumstances in the future, then a consistent precedence will be set. Discretionary considerations on transparency, orientation and materials will need to be debated and conditioned appropriately by the Planning Commission. Staff has written conditions for approval based on the applicant proposal, the Planning Commission is the decision-making authority and may make any adjustment necessary to the current conditions.

AGENCY AND CITY DEPARTMENT COMMENTS

Comments were solicited from the following departments or agencies:

• Environmental	• Engineering
• Water	

PUBLIC COMMENTS

Notices were mailed and posted. As of the time of this report, one written comment had been received concerning downtown walkability and is attached for review.

PUBLIC NOTIFICATION

Legal notices were published in the Herald Journal on 10/31/20 and the Utah Public Meeting website on 11/4/20. Public notices were mailed to all property owners within 300 feet of the project site on 10/19/20.

RECOMMENDED CONDITIONS OF APPROVAL FOR THE DESIGN REVIEW AND CONDITIOANL USE PERMIT

This project is subject to the proponent or property owner agreeing to comply with the following conditions as written, or as may be amended by the Planning Commission.

1) All standard conditions of approval will be recorded with the Design Review and are available in the Community Development Department.
2) The portico along the drive-thru land adjacent to Main Street shall be extended from 2 columns to 4 columns wide (same as 400 North side) for structure setback compliance and frontage requirements.
3) The porticos can be considered as meeting the intent of transparency in this application and setting.
4) An additional secondary building material shall be added to achieve a mix of materials.
5) The west façade shall be similar in architectural details as the east façade with the primary entrance and include the parapet/roof treatment over the 4-column portico.
6) A performance landscaping plan, prepared in accordance with §17.39 of the LDC and consistent with the proposed landscaping, shall be submitted for approval to the Community Development Department prior to the issuance of the building permit. The plan shall provide dense low-growing landscaping near the drive-thru lane to buffer cars and 18 SF of parking lot landscaping per every stall contained within. Existing street trees along 400 North shall remain.
7) The Main Street frontage (right-of-way) design shall match the north part of the block with widened sidewalks, tree wells and smaller planting strips.

8) The project shall provide 33 parking stalls and a bike rack. All adjacent or opposite parking stalls shall either be 90 degree (perpendicular) or angled. Changes in direction shall only be made in separated areas of the parking lot.
9) Cross easements shall be provided for vehicle circulating to driveway points on 100 East, 400 North, Main Street and 500 North and through inner block areas.
10) Exterior lighting shall be concealed source, down-cast and reviewed and approved prior to the issuance of a building permit and shall comply with current LDC regulations.
11) Unless abandoned as per the LDC for a period of 90 days or more, moving the existing pole sign off the public right-of-way property will not jeopardize the sign's grandfathering. The sign movement shall be limited to the nearest location entirely on private property.
12) No signs are approved with this Design Review Permit. All signage shall be approved and permitted by staff in accordance with the Land Development Code.
13) No fences are approved with this Design Review Permit. All fences shall be approved and permitted by staff in accordance with the Land Development Code.
14) Rooftop mechanical and/or building wall mechanical equipment shall be placed out of view from the street or screen from view from the street.
15) Weather protection shall be provided above all pedestrian entrances.
16) Prior to issuance of a Building Permit, the Director of Community Development shall receive a written memorandum from each of the following departments or agencies indicating that their requirements have been satisfied:
    a. ***Environmental – contact 435-716-9515***
        - Minimum 60 ft. straight on access required. Approach must be level, no down or uphill slopes.
        - Minimum inside measurement for a double enclosure is 24 ft. wide by 10 ft. deep. Minimum inside measurement for a single enclosure is 12 ft. wide by 10 ft. deep.
        - Place bollards in the back of enclosure to protect walls.
        - Barrel hinges are suggested for the gates. We need the full 12 ft. clearance so gates must be designed to open completely.
    b. ***Engineering - contact 435-716-9160***
        - Recent demo permit of existing building requested to cap existing utilities at property line for reuse of new development. Site plans show new water services, fire line and sewer services to new structure. All existing services not being used by new development shall be capped at the City utility main lines. Per City GIS information, this includes 3 sewer laterals and a 1.5" water service, meter and vault. Contact Logan City Public Works/Engineering for addition information regarding existing services if needed.
        - Provide a Property Line Agreement for new parcel associated with the new development.
        - Provide water shares or an in-lieu fee for increased water demand to City system above current services to the existing site. This includes indoor and outdoor water consumption.
        - Provide storm water detention/retention for new development per City Stormwater standards.
        - Provide a private water utility agreement for the new fire line to the development.
        - Schedule a UDOT CAMP meeting to address access issues/modifications from US 89 and 91 to site.
    c. ***Water/Cross Connection – contact 716-9627***
        - The landscape irrigation system connected to Logan City water must have high hazard rated backflow protection and be tested.
        - Any fire suppression systems connected to Logan City water must have a minimum DC (ASSE1015) installed and tested (no glycol or chemicals in this system).
        - Water main for building must have a RP (ASSE1013) installed and tested as it enters the building before any branch offs or possible connections for containment (for city protection). Properly sized drain required.

- All points of use of water must comply with 2018 IPC and Utah State Amendments, during and after construction.

RECOMMENDED FINDINGS FOR APPROVAL FOR THE DESIGN REVIEW PERMIT

The Planning Commission bases its decisions on the following findings supported in the administrative record for this project:

1. The proposed project is compatible with surrounding land uses and will not interfere with the use and enjoyment of adjacent properties because of the building design, site layout, materials, landscaping, and setbacks.
2. The Design Review Permit conforms to the requirements of Title 17 of the Logan Municipal Code.
3. The proposed project provides required off-street parking.
4. The project meets the goals and objectives of the TC-1 designation within the Logan General Plan by providing commercial services near high capacity roadways and is designed in way for easy circulation of both pedestrian and vehicles.
5. The project met the minimum public noticing requirements of the Land Development Code and the Municipal Code.
6. Main Street and 400 North provide access and is adequate in size and design to sufficiently handle all traffic modes and infrastructure related to the land use.

LOGAN CITY UNITED IN SERVICE
COMMUNITY DEVELOPMENT

APPLICATION FOR PROJECT REVIEW

☒ **Planning Commission** ☐ **Land Use Appeal Board** ☐ **Administrative Review**

Date Received	Received By	Scheduled Meeting Date	Zone	Application Number
10-5-20	RH	Nov. 12	TC-1	PC 20-054

Type of Application (Check all that apply):

☒ Design Review ☐ Conditional Use ☐ Subdivision ☐ Zone Change
☐ Code Amendment ☐ Appeal ☐ Other ☐ Administrative Design Review

PROJECT NAME
In-N-Out Burger

PROJECT ADDRESS
404 N. Main Street, Logan UT 84321

COUNTY PLAT TAX ID #
06 -- 042 --0010

AUTHORIZED AGENT FOR PROPERTY OWNER (Must be accurate and complete)
In-N-Out Burgers, Inc.

MAIN PHONE #
(626)260-4265

MAILING ADDRESS: 13502 Hamburger Lane
CITY: Baldwin Park
STATE: CA
ZIP: 91706

EMAIL ADDRESS
cyee@innout.com

PROPERTY OWNER OF RECORD (Must be listed)
B&N Rentals, LLC, a Utah limited liability comapny

MAIN PHONE #

MAILING ADDRESS: 404 N. Main Street, Logan UT 84321
CITY
STATE
ZIP

EMAIL ADDRESS

DESCRIBE THE PROPOSED PROJECT AS IT SHOULD BE PRESENTED
(Include as much detail as possible - attach a separate sheet if needed)

Redevelopment of the property into a 3,879 square foot In-N-Out Burger restaurant with drive through service and outdoor seating.

Total Lot Size (acres)
0.866 acres
(37,737 square feet)

Size of Proposed New Building (square feet)
3,879 square feet

Number of Proposed New Units/Lots
N/A

- NO SITE ACTIVITY MAY OCCUR UNTIL AFTER APPROPRIATE COMMITTEE APPROVAL -

I certify that the information contained in this application and all supporting plans are correct and accurate. I also certify that I am authorized to sign all further legal documents and permits on behalf of the property owner.

Signature of Property Owner's Authorized Agent
Cassie Davey

I certify that I am the property owner on record of the subject property and that I consent to the submittal of this project. I understand that all further legal documents and permits will be sent to my authorized agent listed above.

Signature of Property Owner

13502 Hamburger Lane
Baldwin Park, Ca 91706-5885
626-813-8200

IN-N-OUT BURGER

The Best Enterprise
Is A Free Enterprise™

October 1, 2020

City of Logan
Russ Holley, Senior Planning
290 N. 100 W.
Logan, UT 84321

Re: Design Review Permit Application
3,879 SF In-N-Out Burger Restaurant with Drive-Thru
404 N. Main Street, Logan, UT 84321

Dear Russ:

In-N-Out Burger is excited to be exploring the potential of a new, single-story In-N-Out Burger restaurant with drive-through service and outdoor patio seating (and associated site improvements to include new asphalt parking lot and new street frontage and interior landscaping) at 404 N. Main Street.

The property is currently an operating Shell gas station, which, if our project is approved, is proposed to be closed and demolished including the corresponding site improvements and all underground facilities to make way for our brand new development. The total site area is approximately 0.866 acres, or approximately 37,737 square-feet.

Our preliminary due diligence indicates that this parcel is zoned Town Center-1 (TC-1). Our reading and understanding of the City of Logan Zoning Ordinance further indicates that In-N-Out's proposed use of a restaurant with drive through service is an allowable use by-right. The site is currently accessed via two dedicated curb cuts, one each on Main Street and 400 North respectively, as well as one shared curb cut with the surrounding shopping center on Main Street. Our project proposes to close the two dedicated curb cuts on Main Street and 400 North; the sole access point for our project will be the existing shared driveway on Main Street just north of our development.

Our proposed In-N-Out building construction is with a "Bone China White" stucco finish with archways throughout the building and our drive through canopy. These archways integrate changes in plane and wall thicknesses and are further enhanced by detailed cornices at each of their columns. Tower elements at a maximum height of 23'-2" are also incorporated into the building, including at the customer entrances, to provide vertical relief and visually-pleasing focal points. Parapets for areas of flat roof are at an elevation of approximately 19'-10" which provides ample screening of the rooftop kitchen and mechanical equipment. The top of the drive-thru canopy roof is approximately 13'-7" in height.

The restaurant will operate 7 days a week from 10:30 AM to 1:00 AM Sunday through Thursday, and 10:30 AM to 1:30 AM Friday and Saturday. Staff will range between 10 to 15 associates per shift, 3 shifts per day. Deliveries will be made by In-N-Out owned and operated vehicles. Deliveries will only be made after the restaurant is closed to the public per strict company policy.

13502 Hamburger Lane
Baldwin Park, Ca 91706-5885
626-813-8200

IN-N-OUT BURGER

The Best Enterprise
Is A Free Enterprise™

At this preliminary stage, I believe we have identified a proposed project that: 1. complies with the City of Logan's General Plan and Zoning Ordinance; 2. is compatible and harmonious with the commercial retail developments that surround the site; 3. is designed with an optimal site and drive through layout that encourages the majority of the traffic circulation towards the interior of our proposed site; 4. is an aesthetically-pleasing building designed with architectural enhancements that are timeless and always well-maintained with In-N-Out's reputation for meticulously clean and well-lit sites; and finally, 5. enhances a prominent area within Downtown Logan with a family-owned establishment that provides a delicious product that is unmatched in quality to the community, well-paying jobs, and added revenue to the City. To that end, with the City's consensus and/or confirmation of these findings, we hope to pursue this project quickly and efficiently.

I greatly look forward to meeting with City staff and/or discussing this project further with you. If you should have any questions, concerns, or comments, please do not hesitate to contact me. Thank you.

Respectfully,

Cassie Yee
Project Manager
626-813-8226
cyee@innout.com

City of Logan Land Development Code 17.10.060: Town Center 1 (TC-1) Development Standards

The Town Center 1 Zoning District TC-1 is established to encourage a mix of retail, office, commercial, entertainment, residential, and civic uses within a compact, walkable urban form focused along Main Street or Fourth North and consistent with the Downtown Logan Specific Plan. The TC-1 zone is distinguished from the TC-2 zone in terms of scale, use and intensity of new development along Main Street and Fourth North, and is considered the inner core of downtown Logan.

Our proposed In-N-Out Burger project is a commercial restaurant with a convenient and accessible pedestrian path of travel leading from 400 North directly to our main customer entrance. Our quality hamburgers, cheeseburgers, fries, and milkshakes are a great destination spot that will bring a lively mix into downtown Logan.

- ***Lot Coverage Maximum: 100%***
  The proposed project's lot coverage is 10.28%

- ***Building Frontage Minimum: Main Street – 75% at Front Setback; Fourth North 75% at Front Setback.***
  The length of the building frontage along Main Street is 54'-3 ¾". The building canopy with a length of 43'-6 ¾" is within 4' of the public right of way resulting in a ratio of 80% of the building frontage located within the front setback.

- ***Ground Floor Commercial Required: At least 75% of all buildings fronting either Main Street or Fourth North shall contain street-facing commercial space on the ground floor with a minimum depth of 50'.***
  Our proposed project is a ground-floor only commercial restaurant building with general dimensions of approximately 54'-3 ¾" x 70' +/-.

- ***Commercial Building Setbacks: Front 0'-5'***
  The setback along Main Street is 4'- ½".

- ***Building Height Maximum: Maximum Building Height along any street frontage is 55'***
  Our building has a maximum height of 23'-2".

- ***Commercial Transparency (Fenestration): Ground Floor Frontage (min) 60%***
  Our building canopy along the frontage of Main Street incorporates high archways allowing visibility between the architectural columns into our drive through operations. These open area archways occupy 36 lineal feet over the span of 54'-3 ¾" resulting in 66.3% transparency along the Main Street frontage.

- ***Parking Requirements: 1 space/75 sf of customer service and dining area or 1/150 sf, whichever is greater.***
  The customer service and dining area is approximately 1,398 sf which would result in 19 parking stalls. Using the overall square footage of the building with a 1/150 sf parking ratio results in 26 parking stalls required. Our project proposes 51 parking stalls to serve our restaurant.

IN-N-OUT BURGER

"GOD BLESS AMERICA"

13502 HAMBURGER LANE
BALDWIN PARK, CA 91706

LOGAN, UT

404 N. MAIN ST.

WHITE BELLY BAND WITH SILVER REVEALS AND COOLEY BRITE AWNINGS

ISSUED: 9/23/20

IN-N-OUT BURGER

"GOD BLESS AMERICA"

13502 HAMBURGER LANE
BALDWIN PARK, CA 91706

LOGAN, UT

404 N. MAIN ST.

WHITE BELLY BAND WITH SILVER REVEALS AND COOLEY BRITE AWNINGS

ISSUED: 9/23/20

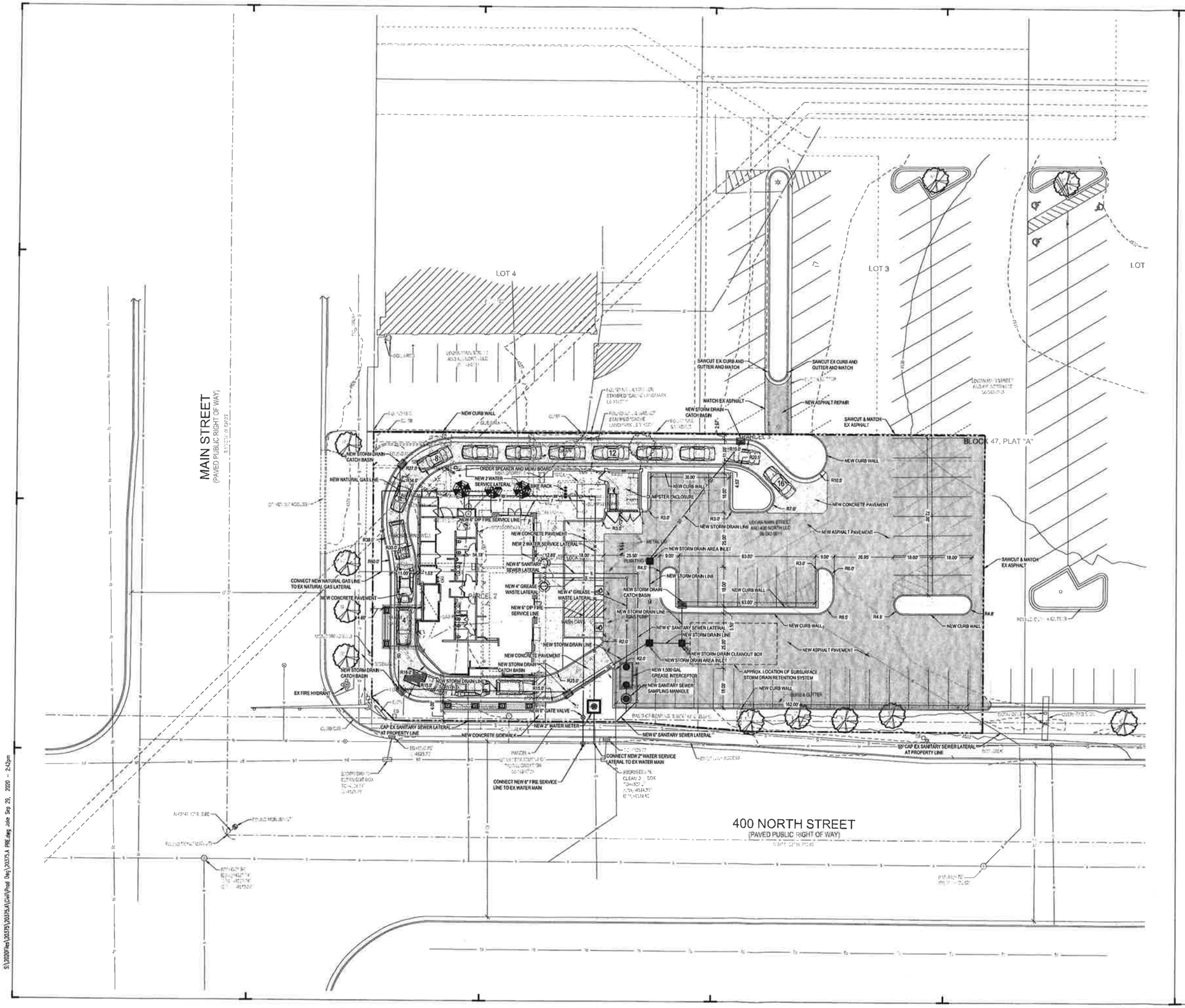

NORTH

SCALE: 1" = 20'

0 10' 20' 40' 80'

McNEIL ENGINEERING™
Economic and Sustainable Designs, Professionals You Know and Trust
8610 South Sandy Parkway, Suite 200 Sandy, Utah 84070 801.255.7700 mcneilengineering.com
Civil Engineering • Consulting & Landscape Architecture
Structural Engineering • Land Surveying & HDS

IN-N-OUT BURGER - LOGAN

404 NORTH MAIN STREET
LOGAN, UTAH 84321
LOCATED IN THE SOUTHWEST 1/4 OF SECTION 12, T12N, R1E, SLB&M

REVISIONS		
REV	DATE	DESCRIPTION

PROJECT NO:	20375.A
DRAWN BY:	JHF
CHECKED BY:	TJD
DATE:	SEPT. 29, 2020

PRELIMINARY PLAN

PRE-1

Blue Stakes of UTAH811 Blue Stakes.org

NOTICE!

THE CONTRACTOR SHALL BE RESPONSIBLE FOR THE LOCATION, PROTECTION, AND RESTORATION OF ALL BURIED OR ABOVE GROUND UTILITIES, SHOWN OR NOT SHOWN ON THE PLANS.

S:\2020Files\20375\20375.A\Civil\Prod Dwg\20375.A PRE.dwg John Sep 29, 2020 - 2:42pm

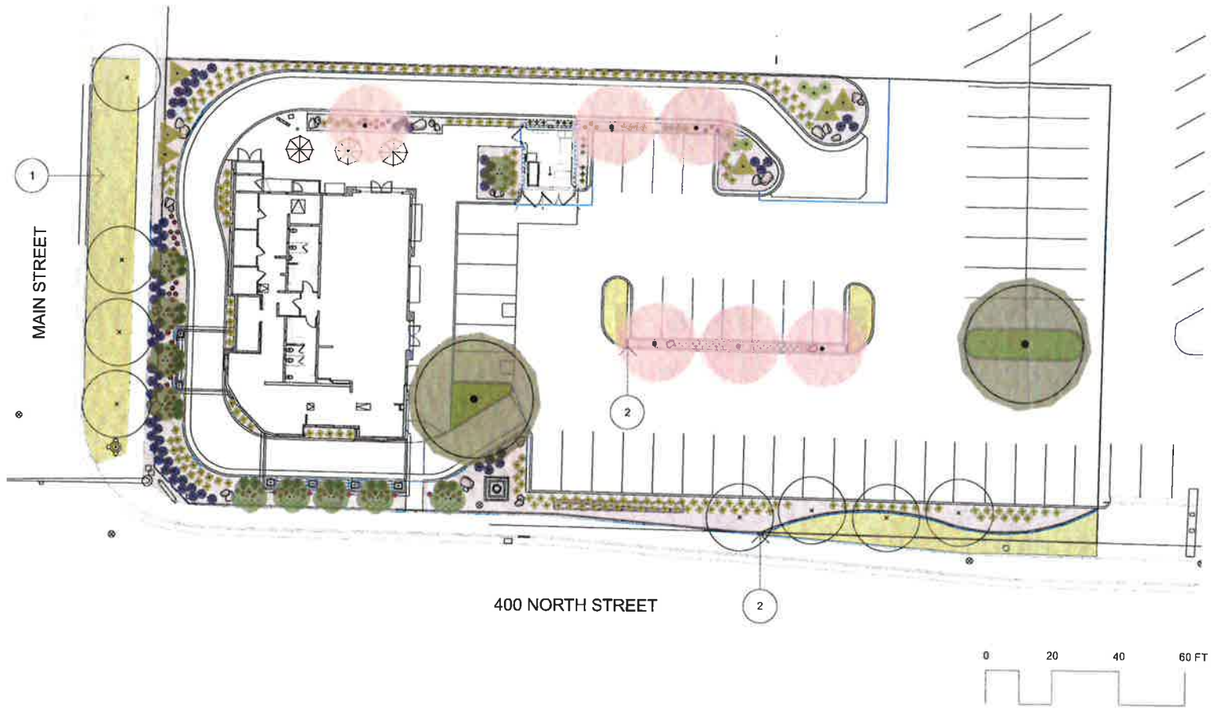

SYMBOLS LEGEND

SYMBOL	QTY.	COMMON NAME	BOTANICAL NAME	SIZE	TOLERANCE
	8	EXISTING DECIDUOUS TREE TO REMAIN			
DECIDUOUS TREES					
	6	EASTERN REDBUD (SINGLE TRUNK)	CERCIS CANADENSIS	2" CAL.	
	2	GREEN VASE ZELKOVA	ZELKOVA SERRATA 'GREEN VASE'	2" CAL	
	10	PACIFIC FIRE VINE MAPLE	ACER CIRCINATUM 'PACIFIC FIRE'	15 GAL	
EVERGREEN TREES					
	6	EMERALD ARROW BOSNIAN PINE	PINUS HELDREICHII (LEUCODERMIS) 'EMERALD ARROW	7' HT.	
SHRUBS					
	67	BEYOND MIDNIGHT BLUEBEARD	CARYOPTERIS X CLANDONENSIS 'BEYOND MIDNIGHT'	5 GAL.	Drought
	92	BAGATELLE RED BARBERRY	BERBERIS THUNBERGII 'BAGATELLE'	5 GAL.	Drought
	6	ARCTIC FIRE DOGWOOD	CORNUS STOLONIFERA 'TARROW'	5 GAL.	
	18	PANCHITO MANZANITA	ARCTOSTAPHYLOS X COLORADOENSIS	5 GAL.	Drought
ORNAMENTAL GRASSES					
	205	EL DORADO FEATHER REED GRASS	CALAMAGROSTIS X ACUTIFLORA 'EL DORADO'	5 GAL.	
	85	LITTLE BUNNY FOUNTAIN GRASS	PENNISETUM ALOPECUROIDES 'LITTLE BUNNY'	1 GAL.	
GROUNDCOVERS & MULCH					
	1,289 S.F.	LAWN			
	5,394 S.F.	CRUSHED ROCK			
BOULDERS					
	32	"BROWN'S CANYON RED VEIN" BOULDERS			

LOGAN CITY DATA

LAND DEVELOPMENT CODE - CH. 17.32: LANDSCAPING

ZONED AS	TC-1 (TOWN CENTER 1)	
TOTAL SITE AREA	37,737 S.F. = 0.87 AC.	
	REQUIRED	PROVIDED
GENERAL:		
PERCENTAGE OF LANDSCAPE AREA IN LAWN	MAX. 75%	1,130 S.F. = 66%
PERCENTAGE OF LANDSCAPE AREA IN XERIC PLANTING BED	MIN. 25%	34%
TREES - 20 PER 1 ACRE OF GROSS LAND	0.87 AC. X 20 = 17	24
SHRUBS - 50 PER ACRE OF GROSS LAND	0.87 AC. X 50 = 44	> 44
EVERGREEN PLANT MATERIAL	MIN. 25%	YES
RIGHT-OF-WAY:		
STREET TREES 1 / 30 O.C.		
MAIN STREET	133 L.F. / 30 = 4	4
400 NORTH STREET	264 L.F. / 30 = 9	9
DECORATIVE HARDSCAPE	MAX. 50%	0%
PARKING LOT		
INTERIOR PARKING LOT LANDSCAPE - MIN. 18 S.F. PER STALL	51 X 18 = 918 S.F.	943 S.F.
INTERIOR PARKING LOT TREES - 1 PER 15 STALLS	51 / 15 = 3	4
INTERIOR PARKING LOT PLANT COVERAGE	MIN. 50%	634 S.F. / 942 S.F. = 67%

REFERENCE NOTES

1. EXISTING LAWN TO REMAIN
2. CONCRETE WOMSTRIP

AVOID CUTTING UNDERGROUND UTILITIES IT'S COSTLY.
Call BEFORE YOU Dig
1-800-662-4111

NOTICE!

THE CONTRACTOR SHALL BE RESPONSIBLE FOR THE LOCATION, PROTECTION, AND RESTORATION OF ALL BURIED OR ABOVE GROUND UTILITIES, SHOWN OR NOT SHOWN ON THE PLANS.

NORTH

McNEIL ENGINEERING™
Economic and Sustainable Designs, Professionals You Know and Trust
8610 South Sandy Parkway, Suite 200 Sandy, Utah 84070 801.255.7700 mcneilengineering.com
Civil Engineering • Consulting & Landscape Architecture
Structural Engineering • Land Surveying & HDS

STATE OF UTAH
SCOTT A. SCHOONOVER
349757
10/01/2020
LICENSED LANDSCAPE ARCHITECT

IN-N-OUT BURGER - LOGAN

404 NORTH MAIN STREET
LOGAN, UT

REVISIONS

REV	DATE	DESCRIPTION

PROJECT NO: 20375.A
DRAWN BY: TG
CHECKED BY: SS
DATE: OCTOBER 2020
PROPERTY NO:

PRELIMINARY LANDSCAPE PLAN

L0.01

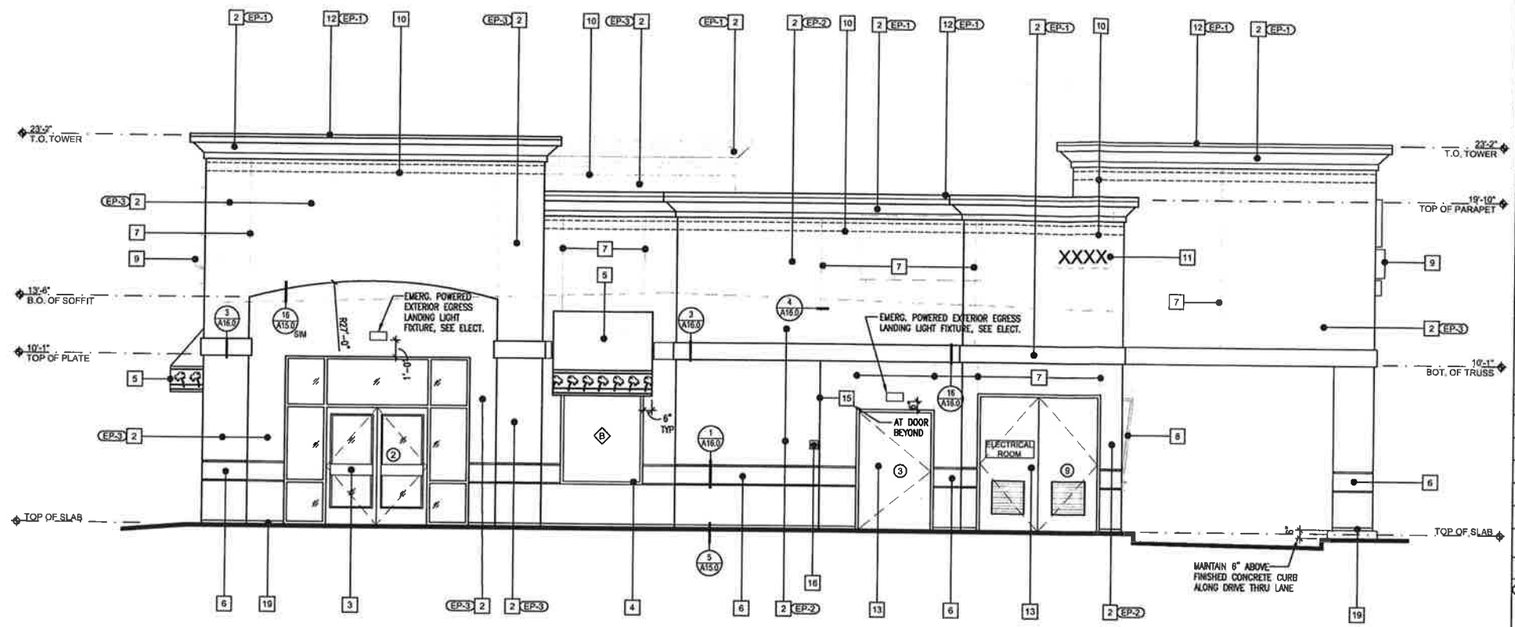

2 A8.0 NORTH ELEVATION
SCALE: 1/4" = 1'-0"

KEY NOTES

1	NOT USED
2	STUCCO: 20/30 FINE SAND FLOAT FINISH.
3	ALUMINUM STOREFRONT DOORS: CLEAR ANODIZED ALUMINUM.
4	ALUMINUM WINDOWS: CLEAR ANODIZED ALUMINUM.
5	AWNINGS: PVC COATED WICK-RESISTANT ERADICABLE POLYESTER AWNINGS WITH CUSTOM PALM TREE ERADICATED TO WHITE COLOR BY COOLEY BRITE CUSTOM RED 79-L1124A. FLAME RETARDANT PER UL-48, UL-94, NFPA 701. PROVIDE FLUORESCENT BACKLIGHTING. SEE: 5/A16.0 & 6/A16.0.
6	STUCCO BAND: PAINT (EP-1). INTEGRAL COLOR ACRYLIC PLASTER TO MATCH PAINT (EP-1). 1" ALUMINUM REVEAL TOP AND BOTTOM (DO NOT PAINT REVEALS). SEE DETAILS 1/A16.0 & 13/A17.0
7	1/4" WIDE METAL PENN SCREED. SEE DETAIL 4/A16.0. ALIGN CONTROL JOINTS ON DRIVE-THRU CANOPY FASCIA WITH CONTROL JOINTS ON BOTTOM OF SOFFIT.
8	SLOPED ALUMINUM WINDOWS: U.S. ALUMINUM S-010. GLASS JOINTS TO HAVE POLISHED EDGES WITH SILICONE JOINTS. REDWOOD FRAMES TO BE PRIMED WITH AXALTA IMRON IND 9P01 - PRIMER CAN BE TINTED GRAY. FINISH COAT TO BE AXALTA IMRON IND 9T01 TINTED CUSTOM COLOR FORMULA 'INO RED HIGH GLOSS.'
9	IN-N-OUT BURGER ILLUMINATED LOGO SIGN: UNDER SEPARATE PERMIT.
10	L.E.D. DOUBLE BAND LIGHTING: UNDER SEPARATE PERMIT.
11	INTERNALLY ILLUMINATED BUILDING ADDRESS NUMBERS TO BE 12" HIGH, 6" MIN. W/ MIN. STROKE WIDTH OF 0.5 INCH PER FIRE DEPARTMENT AND CITY JURISDICTION ADDRESS DISPLAY REQUIREMENTS: 1. ADDRESS SHALL BE DISPLAYED & VISIBLE FROM BOTH STREET DIRECTIONS OF APPROACHING VEHICLES. 2. PERMANENT NUMBERS AND LETTERS SHALL BE MADE OF DURABLE AND CLEARLY VISIBLE MATERIAL SUCH AS WOOD, METAL, CERAMIC, PLASTIC AND VINYL. (PAINTED OR GLUED ON NUMBERS ARE NOT ACCEPTABLE MATERIALS). 3. NUMBERS SHALL BE OF COLORS CONTRASTING WITH BACKGROUND TO WHICH THEY ARE ATTACHED. 4. NUMBERS SHALL BE A MINIMUM PROPORTION RATIO OF 6:1 (HEIGHT TO WIDTH). 5. NUMBERS CANNOT BE SPELLED.
12	METAL CAP: COLOR TO MATCH STUCCO.
13	HOLLOW METAL DOOR: SEE SHEET A11.0, HM DOORS AND JAMBS SHALL HAVE POWDER COAT FINISH AS FOLLOWS: INTERIOR DOORS- TIGER DRYLAC - SMOOTH, HIGH GLOSS FINISH, "BENGAL WHITE", EXTERIOR DOORS- CARDINAL - GLOSS, SMOOTH FINISH, "BONE CHINA" OR TO MATCH EXTERIOR STUCCO PAINT COLOR - (VERIFY ELEVATIONS- EP-1). WHERE FIELD PAINTING DOORS AND JAMBS IS NECESSARY- NOT RECOMMENDED, THE ALTERNATE WOULD BE TO USE AXALTA IMRON IND 9P01 WHITE PRIMER. FINISH COAT TO BE AXALTA IMRON IND 9T01 GLOSS WHITE. EXTERIOR HM DOORS & JAMBS- USE SAME PRODUCT TINTED TO MATCH EXTERIOR BUILDING PAINT COLOR EP-1. NOTE- TRASH ENCLOSURE METAL DOORS AND POSTS TO BE FIELD PAINTED USING AXALTA IMRON AS DESCRIBED ABOVE.
14	5'-0" HIGH STUB OUT FOR Co2 LINE. MOUNT ON ADJACENT SIDE WALL.
15	4" MIN. HIGH WHITE LETTERING "RISER ROOM" ON RED BACKGROUND SIGN. MOUNT ON RISER ROOM DOOR
16	RECESSED KNOX BOX AT 5'-0" HIGH TO THE RIGHT OF FIRE RISER ROOM. SEE DETAIL 10/A17.0
17	RECESSED LED TAPE LIGHT IN SOFFIT (SHOWN DASHED). SEE DETAIL 9/A17.1
18	NOT USED.
19	TEXTURE EXPOSED FOUNDATION WALL BELOW STUCCO WEEP SCREED AND PAINT TO MATCH WALL.

EXTERIOR PAINT SCHEDULE

NO.	MFR.	MODEL	COLOR #	COLOR NAME	FINISH	REMARKS
EP-1	DUNN EDWARDS	ARISTOSHIELD 70	DEW 339	BONE CHINA	HIGH GLOSS	PRIME W/ D.E. ULTRA-GRIP PREMIUM PRIMER
ALT. MFR.	SHERWIN WILLIAMS	SUPER PAINT LATEX	B66W00611	IN-N-OUT BONE CHINA	HIGH GLOSS	STUCCO: PRIME W/ LOXON CONCRETE & EXT LATEX PRIMER WHITE - A24W08300. GALV METAL: PRIME W/ GALVITE HS ACRYLIC COATING - B50WZ0030, OFF WHITE
EP-2	DUNN EDWARDS	ARISTOSHIELD 70	DEW 339	BONE CHINA	HIGH GLOSS	PRIME W/ D.E. ULTRA-GRIP PREMIUM PRIMER
ALT. MFR.	SHERWIN WILLIAMS	SUPER PAINT LATEX	A84W01151	IN-N-OUT BONE CHINA	HIGH GLOSS	SEE REMARKS FOR EP-1 ALT MFR.
EP-3	DUNN EDWARDS	ARISTOSHIELD 70	DEW 339	BONE CHINA	HIGH GLOSS	PRIME W/ D.E. ULTRA-GRIP PREMIUM PRIMER
ALT. MFR.	SHERWIN WILLIAMS	SUPER PAINT LATEX	A84W01151	IN-N-OUT BONE CHINA	HIGH GLOSS	SEE REMARKS FOR EP-1 ALT MFR.
EP-4	DUNN EDWARDS	ARISTOSHIELD 70	ASHL-70-0	INO RED	HIGH GLOSS	PRIME W/ D.E. ULTRA-GRIP PREMIUM PRIMER

ALTERNATE MANUFACTURER TO BE USED ONLY WHEN DUNN EDWARDS IS NOT AVAILABLE.

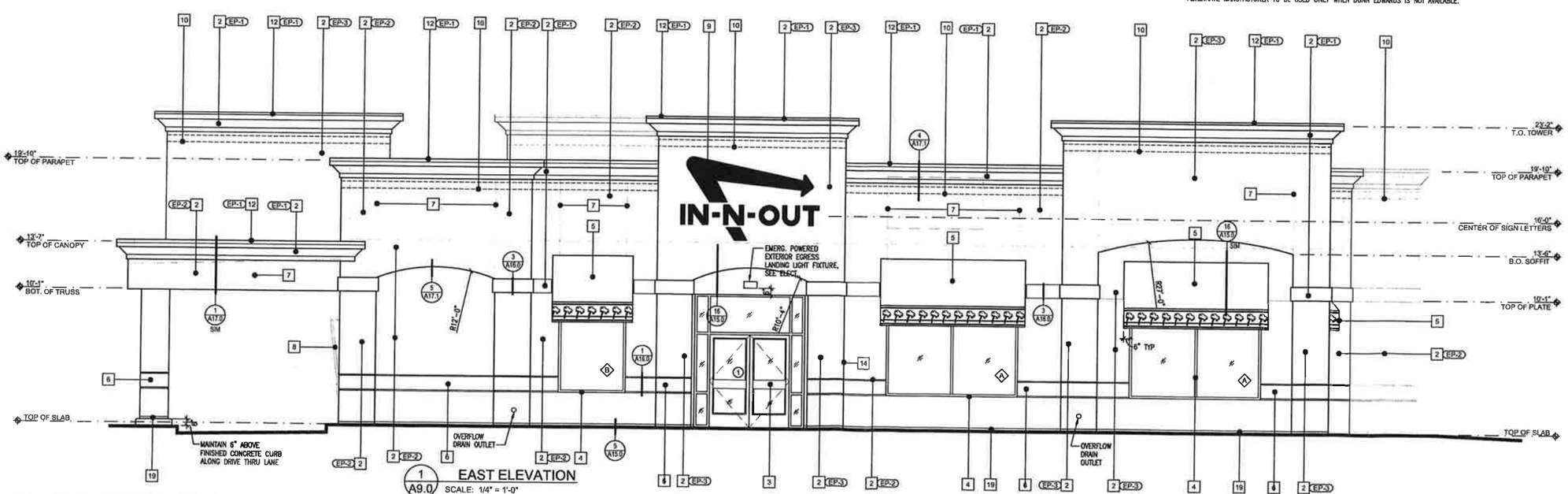

1 A9.0 EAST ELEVATION
SCALE: 1/4" = 1'-0"

GHA Architecture / Development
14901 Quorum Drive
Suite 300
Dallas Texas 75254
Ph: (972) 239-6884
Fax: (972) 239-6054

ISSUE RECORD

DATE	DESCRIPTION
URBAN DESIGN PROTOTYPE	
05/07/20	ISSUED FOR PERMIT

REVISION RECORD

PROFESSIONAL SEAL

PROTOTYPE VERSION
URBAN 16.2.83U

PROJECT NAME

IN-N-OUT BURGER

LOGAN UTAH

404 N. MAIN STREET LOGAN, UT 84321

IN-N-OUT BURGER®

GOD BLESS AMERICA

PROJECT NUMBER
200323.001

SHEET TITLE

EXTERIOR ELEVATIONS

SHEET NUMBER

A8.0

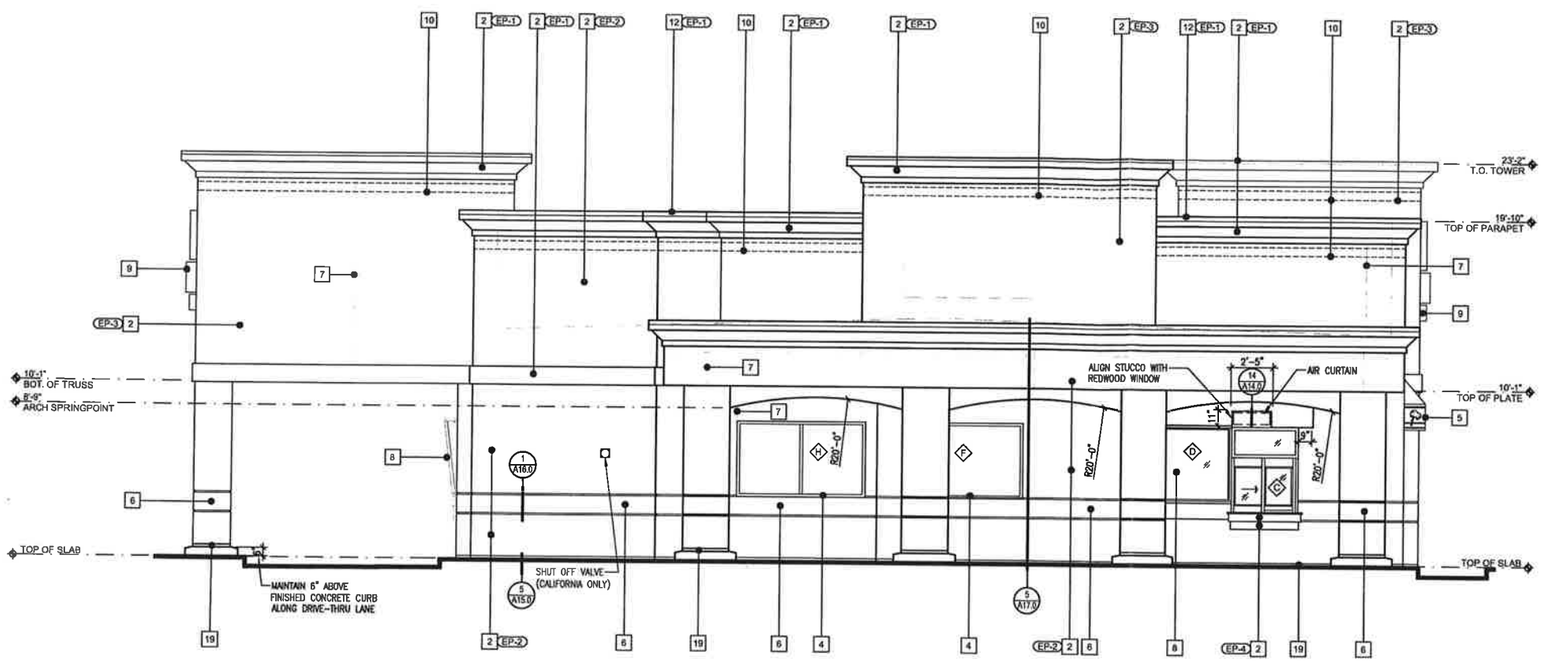

2 SOUTH ELEVATION
A9.0 SCALE: 1/4" = 1'-0"

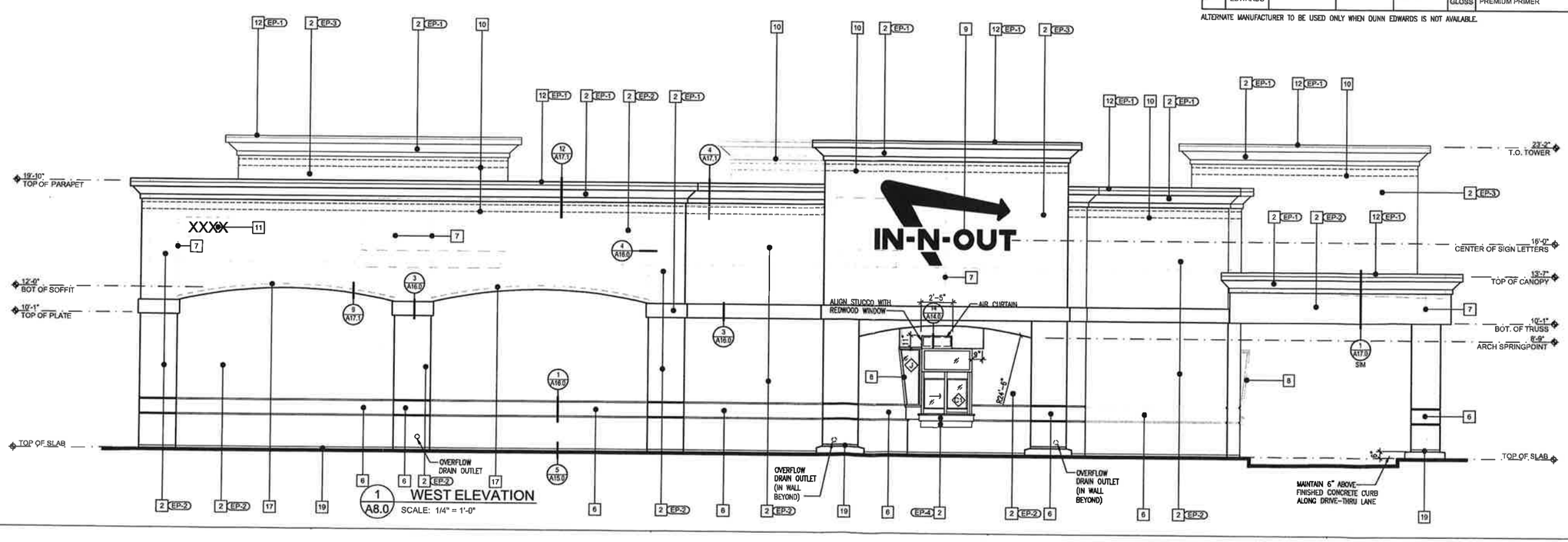

1 WEST ELEVATION
A8.0 SCALE: 1/4" = 1'-0"

KEY NOTES

1	NOT USED
2	STUCCO: 20/30 FINE SAND FLOAT FINISH.
3	ALUMINUM STOREFRONT DOORS: CLEAR ANODIZED ALUMINUM.
4	ALUMINUM WINDOWS: CLEAR ANODIZED ALUMINUM.
5	AWNINGS: PVC COATED WICK-RESISTANT ERADICABLE POLYESTER AWNINGS WITH CUSTOM PALM TREE ERADICATED TO WHITE COLOR BY COOLEY BRITE CUSTOM RED 79-L1124A, FLAME RETARDANT PER UL-48, UL-94, NFPA 701. PROVIDE FLUORESCENT BACKLIGHTING. SEE: 5/A16.0 & 6/A16.0.
6	STUCCO BAND: PAINT (EP-1). INTEGRAL COLOR ACRYLIC PLASTER TO MATCH PAINT (EP-1). 1" ALUMINUM REVEAL TOP AND BOTTOM (DO NOT PAINT REVEALS). SEE DETAILS 1/A16.0 & 13/A17.0
7	1/4" WIDE METAL PENN SCREED: SEE DETAIL 4/A16.0. ALIGN CONTROL JOINTS ON DRIVE-THRU CANOPY FASCIA WITH CONTROL JOINTS ON BOTTOM OF SOFFIT.
8	SLOPED ALUMINUM WINDOWS: U.S. ALUMINUM S-010. GLASS JOINTS TO HAVE POLISHED EDGES WITH SILICONE JOINTS. REDWOOD FRAMES TO BE PRIMED WITH AXALTA IMRON IND 9P01 - PRIMER CAN BE TINTED GRAY. FINISH COAT TO BE AXALTA IMRON IND 9T01 TINTED CUSTOM COLOR FORMULA 'INO RED HIGH GLOSS.'
9	IN-N-OUT BURGER ILLUMINATED LOGO SIGN: UNDER SEPARATE PERMIT.
10	L.E.D. DOUBLE BAND LIGHTING: UNDER SEPARATE PERMIT.
11	INTERNALLY ILLUMINATED BUILDING ADDRESS NUMBERS TO BE 12" HIGH, 6" MIN. W/ MIN. STROKE WIDTH OF 0.5 INCH PER FIRE DEPARTMENT AND CITY JURISDICTION ADDRESS DISPLAY REQUIREMENTS: 1. ADDRESS SHALL BE DISPLAYED & VISIBLE FROM BOTH STREET DIRECTIONS OF APPROACHING VEHICLES. 2. PERMANENT NUMBERS AND LETTERS SHALL BE MADE OF DURABLE AND CLEARLY VISIBLE MATERIAL SUCH AS WOOD, METAL, CERAMIC, PLASTIC AND VINYL. (PAINTED OR GLUED ON NUMBERS ARE NOT ACCEPTABLE MATERIALS). 3. NUMBERS SHALL BE OF COLORS CONTRASTING WITH BACKGROUND TO WHICH THEY ARE ATTACHED. 4. NUMBERS SHALL BE A MINIMUM PROPORTION RATIO OF 6:1 (HEIGHT TO WIDTH). 5. NUMBERS CANNOT BE SPELLED.
12	METAL CAP: COLOR TO MATCH STUCCO.
13	HOLLOW METAL DOOR: SEE SHEET A11.0. HM DOORS AND JAMBS SHALL HAVE POWDER COAT FINISH AS FOLLOWS: INTERIOR DOORS- TIGER DRYLAC - SMOOTH, HIGH GLOSS FINISH, "BENGAL WHITE", EXTERIOR DOORS- CARDINAL - GLOSS, SMOOTH FINISH, "BONE CHINA" OR TO MATCH EXTERIOR STUCCO PAINT COLOR - (VERIFY ELEVATIONS- EP-1). WHERE FIELD PAINTING DOORS AND JAMBS IS NECESSARY- NOT RECOMMENDED, THE ALTERNATE WOULD BE TO USE AXALTA IMRON IND 9P01 WHITE PRIMER. FINISH COAT TO BE AXALTA IMRON IND 9T01 GLOSS WHITE. EXTERIOR HM DOORS & JAMBS- USE SAME PRODUCT TINTED TO MATCH EXTERIOR BUILDING PAINT COLOR EP-1. NOTE- TRASH ENCLOSURE METAL DOORS AND POSTS TO BE FIELD PAINTED USING AXALTA IMRON AS DESCRIBED ABOVE.
14	5'-0" HIGH STUB OUT FOR Co2 LINE. MOUNT ON ADJACENT SIDE WALL.
15	4" MIN. HIGH WHITE LETTERING "RISER ROOM" ON RED BACKGROUND SIGN. MOUNT ON RISER ROOM DOOR
16	RECESSED KNOX BOX AT 5'-0" HIGH TO THE RIGHT OF FIRE RISER ROOM. SEE DETAIL 10/A17.0
17	RECESSED LED TAPE LIGHT IN SOFFIT (SHOWN DASHED). SEE DETAIL 9/A17.1
18	NOT USED.
19	TEXTURE EXPOSED FOUNDATION WALL BELOW STUCCO WEEP SCREED AND PAINT TO MATCH WALL.

EXTERIOR PAINT SCHEDULE

NO.	MFR.	MODEL	COLOR #	COLOR NAME	FINISH	REMARKS
EP-1	DUNN EDWARDS	ARISTOSHIELD 70	DEW 339	BONE CHINA	HIGH GLOSS	PRIME W/ D.E. ULTRA-GRIP PREMIUM PRIMER
ALT. MFR.	SHERWIN WILLIAMS	SUPER PAINT LATEX	B66W00611	IN-N-OUT BONE CHINA	HIGH GLOSS	STUCCO: PRIME W/ LOXON CONCRETE & EXT LATEX PRIMER WHITE - A24W08300. GALV METAL: PRIME W/ GALVITE HS ACRYLIC COATING - B50W20030, OFF WHITE
EP-2	DUNN EDWARDS	ARISTOSHIELD 70	DEW 339	BONE CHINA	HIGH GLOSS	PRIME W/ D.E. ULTRA-GRIP PREMIUM PRIMER
ALT. MFR.	SHERWIN WILLIAMS	SUPER PAINT LATEX	A84W01151	IN-N-OUT BONE CHINA	HIGH GLOSS	SEE REMARKS FOR EP-1 ALT MFR.
EP-3	DUNN EDWARDS	ARISTOSHIELD 70	DEW 339	BONE CHINA	HIGH GLOSS	PRIME W/ D.E. ULTRA-GRIP PREMIUM PRIMER
ALT. MFR.	SHERWIN WILLIAMS	SUPER PAINT LATEX	A84W01151	IN-N-OUT BONE CHINA	HIGH GLOSS	SEE REMARKS FOR EP-1 ALT MFR.
EP-4	DUNN EDWARDS	ARISTOSHIELD 70	ASHL-70-0	INO RED	HIGH GLOSS	PRIME W/ D.E. ULTRA-GRIP PREMIUM PRIMER

ALTERNATE MANUFACTURER TO BE USED ONLY WHEN DUNN EDWARDS IS NOT AVAILABLE.

GHA
Architecture / Development
14901 Quorum Drive
Suite 300
Dallas Texas 75254
Ph: (972) 239-8884
Fax: (972) 239-5054

ISSUE RECORD

DATE	DESCRIPTION
URBAN DESIGN PROTOTYPE	
05/07/20	ISSUED FOR PERMIT

REVISION RECORD

PROFESSIONAL SEAL

PROTOTYPE VERSION
URBAN 16.2.03U

PROJECT NAME
IN-N-OUT BURGER

LOGAN
UTAH

404 N. MAIN STREET
LOGAN, UT 84321

IN-N-OUT BURGER®
GOD BLESS AMERICA

PROJECT NUMBER
200323.001

SHEET TITLE
EXTERIOR ELEVATIONS

SHEET NUMBER
A9.0