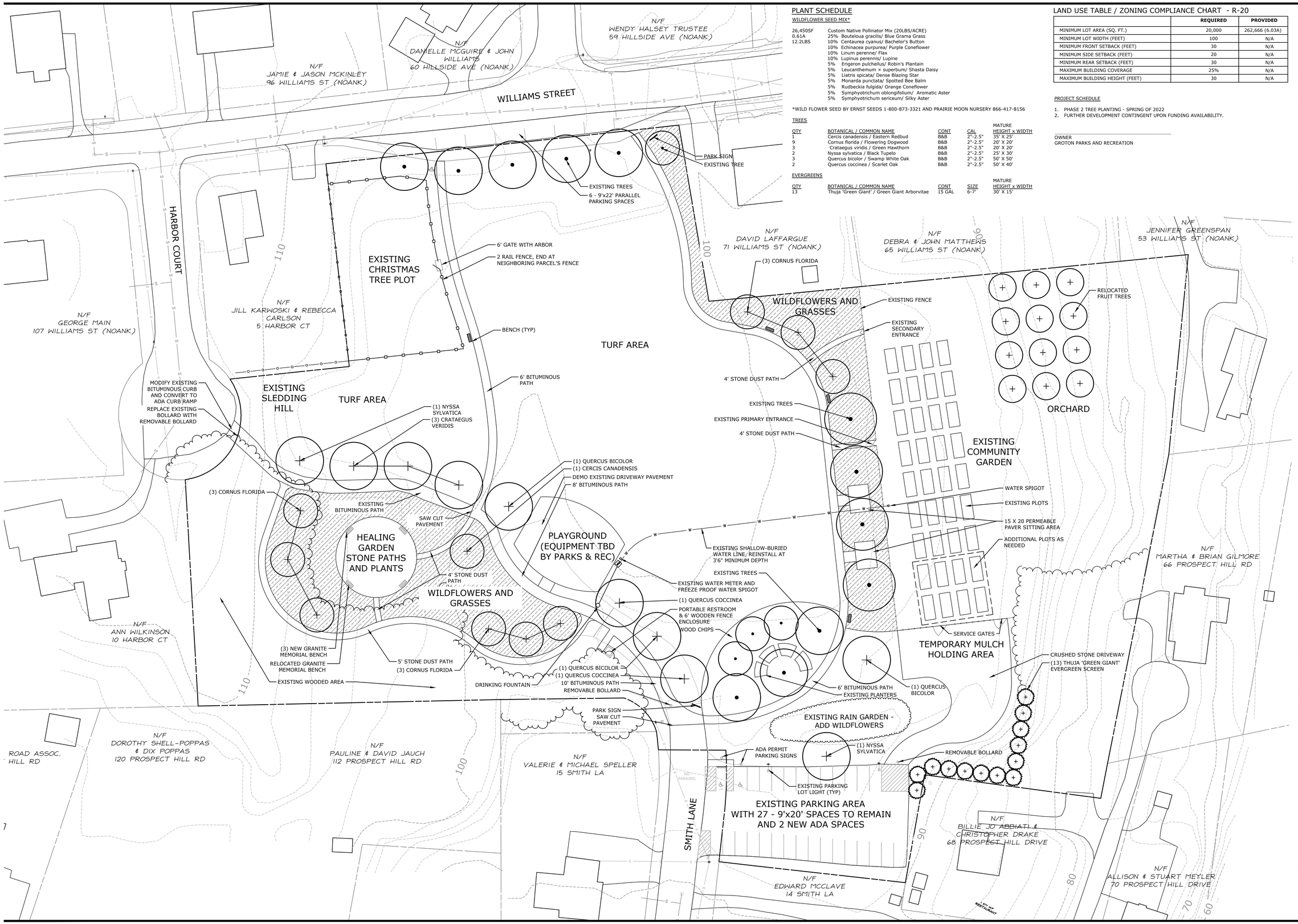

PLANT SCHEDULE

WILDFLOWER SEED MIX*

26,450SF	Custom Native Pollinator Mix (20LBS/ACRE)	
0.61A	25%	Bouteloua gracilis/ Blue Grama Grass
12.2LBS	10%	Centaurea cyanus/ Bachelor's Button
	10%	Echinacea purpurea/ Purple Coneflower
	10%	Linum perenne/ Flax
	10%	Lupinus perennis/ Lupine
	5%	Erigeron pulchellus/ Robin's Plantain
	5%	Leucanthemum × superbum/ Shasta Daisy
	5%	Liatris spicata/ Dense Blazing Star
	5%	Monarda punctata/ Spotted Bee Balm
	5%	Rudbeckia fulgida/ Orange Coneflower
	5%	Symphyotrichum oblongifolium/ Aromatic Aster
	5%	Symphyotrichum sericeum/ Silky Aster

*WILD FLOWER SEED BY ERNST SEEDS 1-800-873-3321 AND PRAIRIE MOON NURSERY 866-417-8156

TREES

QTY	BOTANICAL / COMMON NAME	CONT	CAL	MATURE HEIGHT x WIDTH
1	Cercis canadensis / Eastern Redbud	B&B	2"-2.5"	35' X 25'
9	Cornus florida / Flowering Dogwood	B&B	2"-2.5"	20' X 20'
3	Crataegus viridis / Green Hawthorn	B&B	2"-2.5"	20' X 20'
2	Nyssa sylvatica / Black Tupelo	B&B	2"-2.5"	25' X 30'
3	Quercus bicolor / Swamp White Oak	B&B	2"-2.5"	50' X 50'
2	Quercus coccinea / Scarlet Oak	B&B	2"-2.5"	50' X 40'

EVERGREENS

QTY	BOTANICAL / COMMON NAME	CONT	SIZE	MATURE HEIGHT x WIDTH
13	Thuja 'Green Giant' / Green Giant Arborvitae	15 GAL	6-7'	30' X 15'

LAND USE TABLE / ZONING COMPLIANCE CHART - R-20

	REQUIRED	PROVIDED
MINIMUM LOT AREA (SQ. FT.)	20,000	262,666 (6.03A)
MINIMUM LOT WIDTH (FEET)	100	N/A
MINIMUM FRONT SETBACK (FEET)	30	N/A
MINIMUM SIDE SETBACK (FEET)	20	N/A
MINIMUM REAR SETBACK (FEET)	30	N/A
MAXIMUM BUILDING COVERAGE	25%	N/A
MAXIMUM BUILDING HEIGHT (FEET)	30	N/A

PROJECT SCHEDULE

1. PHASE 2 TREE PLANTING - SPRING OF 2022
2. FURTHER DEVELOPMENT CONTINGENT UPON FUNDING AVAILABILITY.

OWNER
GROTON PARKS AND RECREATION

Groton/Noank Community Park and Garden

89 Williams Street **Noank, CT 06340**

LANDSCAPE
KENT+ FROST
ARCHITECTURE
1 HIGH STREET
MYSTIC, CT 06355
860.572.0784
kentfrost.com

GROTON
PARKS & RECREATION

STATE OF CONNECTICUT
BRIAN J. KENT
#00876
LICENSED
LANDSCAPE ARCHITECT

ISSUED FOR PERMITTING

Revisions	Date

SITE PLAN

Scale	1" = 20'
Date	January 5, 2022
K+F Project No.	2019004
Drawing No.	

L-1.0

Groton/Noank Community Park and Garden

89 Williams Street Noank, CT 06340

LANDSCAPE
KENT+ FROST
ARCHITECTURE
1 HIGH STREET
MYSTIC, CT 06355
860.572.0784
kentfrost.com

GROTON
PARKS & RECREATION

GRANITE MEMORIAL BENCH W/ FACE ENGRAVING
COLOR: CHESTER GREY

WILLIAMS STONE COMPANY
1158 LEE-WESTFIELD ROAD
EAST OTIS, MA 01029

5 GRANITE MEMORIAL BENCH

NTS P-2019-004-GNCP-07

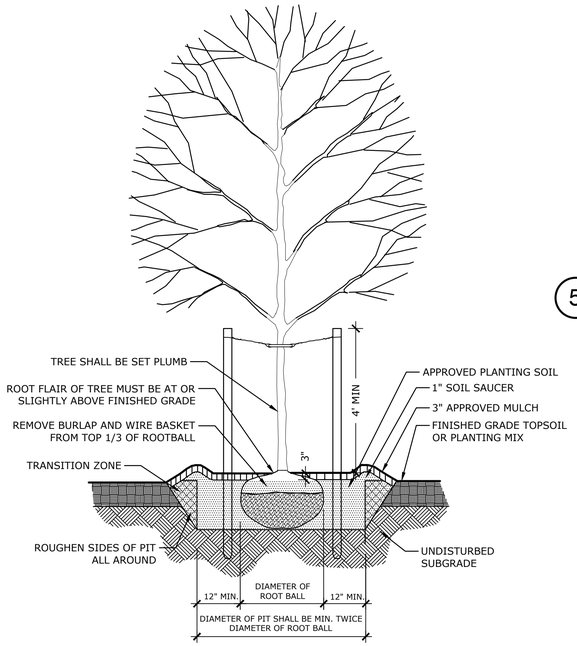

TREE STAKES:
THREE (3) 2" SQ. OAK STAKES SHALL BE TRIANGULATED AROUND ROOT BALL. EACH STAKE SHALL EXTEND 3' MIN. BELOW SURFACE AND 4' MIN. ABOVE. ALLOW TRUNK TO "FLOAT" WITHIN RUBBER COLLAR.

7 TREE PLANTING

NTS P-2019-004-GNCP-11

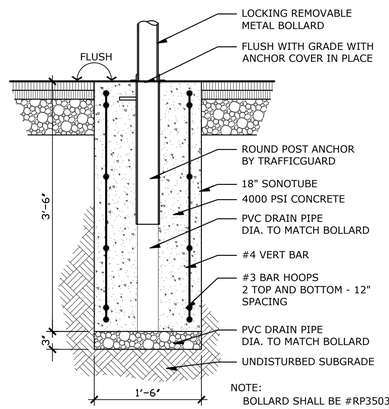

NOTE:
BOLLARD SHALL BE #RP3503-F AS MANUFACTURED BY TRAFFICGUARD DIRECT 877.727.7347

4 REMOVABLE METAL BOLLARD

NTS P-2019-004-GNCP-06

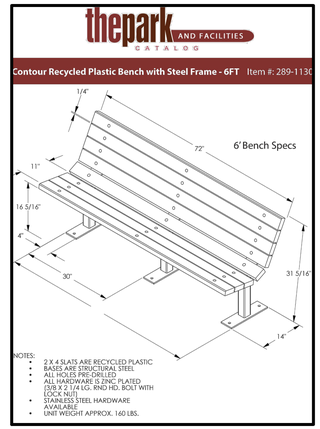

2 PARK BENCH

NTS P-2019-004-GNCP-05

1 DRINKING FOUNTAIN

NTS P-2019-004-GNCP-01

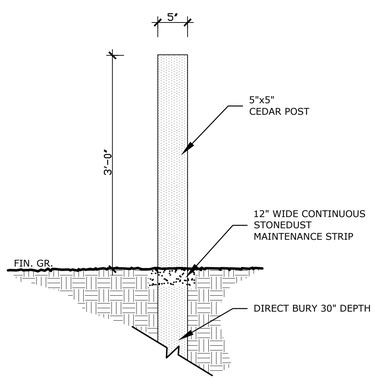

6 2 RAIL WOOD FENCE

NTS

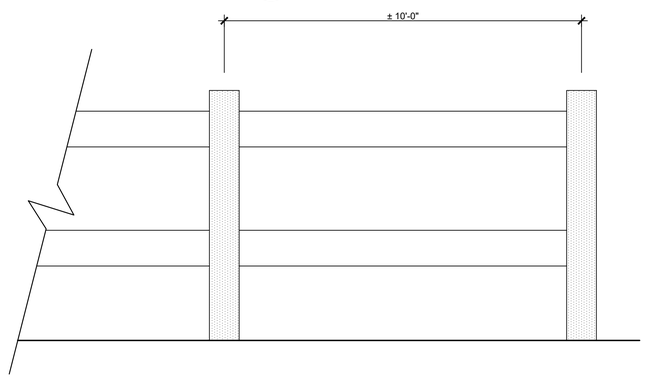

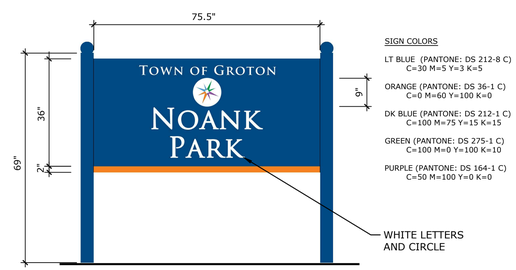

NOTES:
1. SIGN SHOULD BE CONSTRUCTED USING ¾" PVC AND MOUNTED ON ALUMINUM POLES
2. DIGITAL PRINTS APPLIED TO PVC. SIGN TO BE 2 SIDED
3. SIGN TO READ: TOWN OF GROTON NOANK PARK
4. THE POSTS ARE 4"X4"X10' ALUMINUM WITH CAPS
5. POST COLOR TO BE DARK BLUE
6. INSTALLATION BY TOWN STAFF

3 PARK SIGN

NTS P-2019-004-GNCP-09 P-2019-004-GNCP-04

STATE OF CONNECTICUT
BRIAN J. KENT
#00876
LICENSED
LANDSCAPE ARCHITECT

ISSUED FOR PERMITTING

Revisions	Date

SITE DETAILS

Scale	
Date	January 5, 2022
K+F Project No.	2019004
Drawing No.	

L-1.1