WASTEWATER TREATMENT PLANT IMPROVEMENTS
TOWN OF CULPEPER, VIRGINIA

EX.	SYMBOL LEGEND	NEW
	AIR RELEASE VALVE	
	BENCHMARK/FFE	
	BLOW OFF VALVE	
	BOLLARD	
	BORE HOLE	
	BUILDING COLUMN	
	BUSH	
	CABLE BOX	
	CEMETERY	
	CONIFEROUS TREE	
	DECIDUOUS TREE	
	DRAINAGE INLET GRATE	
	DRILL HOLE	
	ELECTRIC PANEL BOX	
	ELECTRIC PEDESTAL	
	ELECTRIC TRANSFORMER	
	ELECTRIC MAN HOLE	
	FIRE HYDRANT	
	FLAG POLE	
	GAS MAN HOLE	
	GAS METER	

EX.	SYMBOL LEGEND	NEW
	GAS VALVE	
	GENERATOR	
	GROUND LIGHT	
	GUY POLE	
	HANDICAPPED PARKING	
	HEAT PUMP	
	IRON PIN	
	LIGHT POLE	
	MAILBOX	
	MONITORING WELL	
	MONUMENT FOUND	
	MONUMENT SET	
	PANEL POINT	
	POWER METER	
	POWER POLE	
	ROAD SIGN	
	SANITARY CLEAN OUT	
	SANITARY SEWER MAN HOLE	
	SIAMESE CONNECTION	
	SIGN	
	SPRINKLER HEAD	

EX.	SYMBOL LEGEND	NEW
	STORM DRAIN MAN HOLE	
	TRAFFIC LIGHT POLE	
	TELEPHONE MAN HOLE	
	TELEPHONE PEDESTAL	
	TELEPHONE POLE	
	TELEPHONE JUNCTION BOX	
	TEST PIT	
	TRAFFIC CONTROL BOX	
	TRAFFIC JUNCTION BOX	
	TRAVERSE	
	UTILITY MARKER POST	
	UTILITY POLE	
	VENT PIPE	
	WATER MAN HOLE	
	WATER METER	
	WATER SURFACE ELEVATION	
	WATER VALVE	
	WELL	
	YARD GRATE	

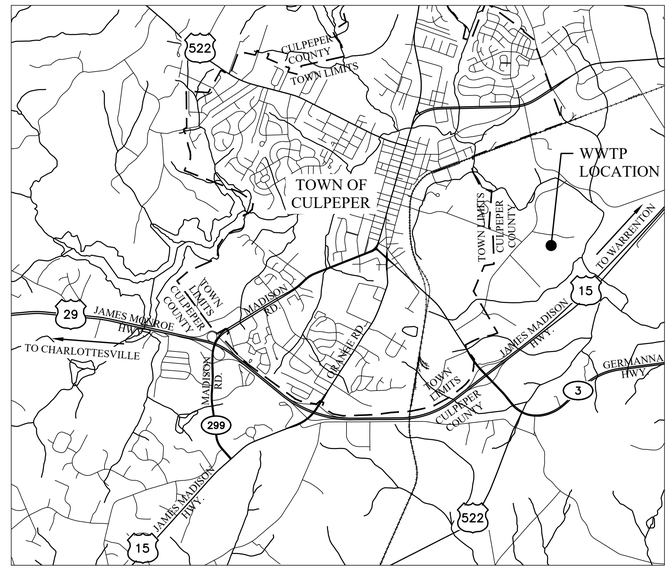

VICINITY MAP
SCALE: 1" = 2,000'

ABBREVIATIONS

AE	AERATION EFFLUENT	HB	HORIZONTAL BEND	RT	RIGHT
AFF	ABOVE FINISHED FLOOR	HC	HANDICAP	R/W	RIGHT OF WAY
AHD	AHEAD	HDPE	HIGH DENSITY POLYETHELENE	SAN	SANITARY SEWER
ARV	AIR RELEASE VALVE	HK	HOOK	SD	STORM DRAIN
BC	BACK OF CURB	HWL	HIGH WATER LEVEL	SDMH	STORM DRAIN MANHOLE
BF	BLIND FLANGE	HPNPW	LOW PRESSURE NON–POTABLE WATER	SE	SECONDARY CLARIFIER EFFLUENT
BFF	BASEMENT FINISHED FLOOR	ID	INNER DIAMETER	SL	SLUDGE
BFP	BELT FILTER PRESS	INV	INVERT	SQ	SQUARE
BM	BENCH MARK	IPF	IRON PIPE FOUND	SRF	SLUDGE RECIRCULATION AND FEED
BK	BACK	IRF	IRON PIN FOUND	SRW	SLUDGE RECIRCULATION WITHDRAWAL
BS	BLENDED SLUDGE	IRS	IRON PIN SET	S.S.	STAINLESS STEEL
BOV	BLOW OFF VALVE	JB	JUNCTION BOX	SSMH	SANITARY SEWER MANHOLE
BW	BOTTOM OF WALL	LAT	LATERAL	STA	STATION
CG	CURB & GUTTER	LF	LINEAR FEET	STD	STANDARD
CIP	CAST IRON PIPE	LP	LAMP POST	STL	STEEL
℄	CENTER LINE	LPNPW	LOW PRESSURE NON–POTABLE WATER	SW	SIDEWALK
CMP	CORRUGATED METAL PIPE	LT	LEFT	TBA	TO BE ABANDONED
CO	CLEAN OUT	LWL	LOW WATER LEVEL	TBR	TO BE REMOVED
CONC	CONCRETE	ME	METHANOL	TC	TOP OF CURB
COR	BOUNDARY LINE CORNER	MF	MONUMENT FOUND	TS	THICKENED SLUDGE
CPP	CORRUGATED PLASTIC PIPE	MH	MANHOLE	TSV	TAPPING SLEEVE AND VALVE
CY	CUBIC YARDS	ML	MIXED LIQUOR	TW	TOP OF WALL
DI	DROP INLET	NC	NORMALLY CLOSED	TWAS	THICKENED WASTE ACTIVATED SLUDGE
DIA	DIAMETER	NF	NAIL FOUND	TYP	TYPICAL
DIP	DUCTILE IRON PIPE	NO	NORMALLY OPEN	UG	UNDERGROUND
DS	DIGESTED SLUDGE	NS	NAIL SET	UGT	UNDERGROUND TELEPHONE
EF	EACH FACE	NIC	NOT IN CONTRACT	UGU	UNDERGROUND UTILITY
EL	ELEVATION	NTS	NOT TO SCALE	UON	UNLESS OTHERWISE NOTED
ELEC	ELECTRIC	OC	ON CENTER	VB	VERTICAL BEND
EOP	EDGE OF PAVEMENT	PE	PRIMARY EFFLUENT	VHD	VEHICLES PER DAY
EOTL	EDGE OF TRAVEL LANE	PF	PLANT FLOW	W	WATER
EQPT	EQUIPMENT	PGL	PROFILE GRADE LINE	WAS	WASTE ACTIVATED SLUDGE
EX OR EXIST	EXISTING	PP	POWER POLE	WL	WATER LINE
EW	EACH WAY	PROP	PROPOSED	WM	WATER METER
FF	FINISHED FLOOR	PRV	PRESSURE RELIEF VALVE	WS	WASTE SLUDGE
FH	FIRE HYDRANT	PS	PRIMARY SLUDGE	WSE	WATER SURFACE ELEVATION
FM	FORCE MAIN	PVC	POLYVINYL CHLORIDE	WT	WATERTIGHT
FL	FLOURIDE	PVMT	PAVEMENT	WWF	WOVEN WIRE FABRIC
FOC	FACE OF CURB	PW	POTABLE WATER	XING	CROSSING
GALV	GALVANIZED	RAS	RETURN ACTIVATED SLUDGE	YDS	YARDS
GBT	GRAVITY BELT THICKENER	RCP	REINFORCED CONCRETE PIPE	YH	YARD HYDRANT
GV	GATE VALVE	REQ'D	REQUIRED		

NOTES:
1. THE SIZE OF THE SYMBOLS MAY VARY FROM THOSE SHOWN.
2. ALL SYMBOLS AND ABBREVIATIONS SHOWN MAY NOT BE USED.

LEGEND

= AREAS TO BE DEMOLISHED

= EXISTING FEATURE TO BE DEMOLISHED

EXISTING	LINETYPE LEGEND	NEW
	BUILDING OVERHEAD	
	ADJACENT PROPERTY LINE	
R/W	ADJACENT RIGHT–OF–WAY	R/W
	BOUNDARY PROPERTY LINE	
R/W	BOUNDARY RIGHT–OF–WAY	R/W
	BUILDING SETBACK	
	BUSH LINE	
OHCT OHCT	CATV OVERHEAD	
UGCT UGCT UGCT	CATV UNDER GROUND	
DRN	DRAIN	DRN
OHT OHT	TELEPHONE OVERHEAD	
UGT UGT UGT	TELEPHONE UNDER GROUND	
	DITCH CENTER LINE	
	EASEMENT CONSTRUCTION AND GRADING	
	EASEMENT SLOPE	
	EASEMENT SANITARY SEWER	

EXISTING	LINETYPE LEGEND	NEW
	EASEMENT STORM	
	EASEMENT STORMWATER MANAGEMENT	
OF	EFFLUENT OUTFALL	OF
	FENCE BARBED WIRE	
	GUARD RAIL	
	FENCE CHAIN LINK	
	FENCE WOOD	
	FENCE WOVEN WIRE	
GAS GAS	GAS UNDER GROUND	
TOB TOB	TOP OF BANK	TOB TOB
OHE OHE	ELECTRIC OVERHEAD	
UGE UGE	ELECTRIC UNDER GROUND	UGE UGE
	PAVEMENT ASPHALT	
	PAVEMENT GRAVEL	
PF	PLANT FLOW	PF
	RAILROAD CENTERLINE	

EXISTING	LINETYPE LEGEND	NEW
RAS	RETURN ACTIVATED SLUDGE	RAS
	ROAD CENTERLINE	
FM FM	SANITARY FORCEMAIN	FM
SAN SAN	SANITARY SEWER	SAN
SL	SLUDGE	SL
	STORM SEWER	
	STREAM CENTERLINE	
	TOPO MAJOR CONTOUR	
	TOPO MINOR CONTOUR	
	TREELINE	
OHU OHU	UTILITY OVERHEAD	
UGU UGU	UTILITY UNDER GROUND	
WAS	WASTE ACTIVATED SLUDGE	WAS
W W W	WATERLINE	W W W
NPW	WATERLINE – NON–POTABLE	NPW

NO.	SHEET REVISION	BY	DATE	NO.	SHEET REVISION	BY	DATE

COMMONWEALTH OF VIRGINIA
JASON A. CLARK
Lic. No. 33605
4/29/2022
PROFESSIONAL ENGINEER

COMMONWEALTH OF VIRGINIA
HERBERT F. WHITE III
Lic. No. 12257
4-29-22
PROFESSIONAL ENGINEER

BID SET

WW ASSOCIATES
ENGINEERS SURVEYORS PLANNERS
PO Box 4119 Lynchburg, VA 24502 Phone: 434.316.6080
968 Olympia Drive, Suite 1 Charlottesville, VA 22911 Phone: 434.984.2700
www.wwassociates.net

DESIGNED BY: JAC	PROJECT: WASTEWATER TREATMENT PLANT IMPROVEMENTS TOWN OF CULPEPER, VIRGINIA		SET REV. NO. –
DRAWN BY: DJC/WAM	TITLE: COVER SHEET		DRAWING NUMBER: C–1
DIHR BY: HFW			
WWA NUMBER: 221028.00	FILE NAME: 102800L_CS1.dwg	DISCIPLINE: CIVIL	SCALE: H: AS SHOWN V: N/A
			DATE: 4/29/22

M:\221028 Town of Culpeper WWTP Improvements\221028.00 Design\102800L_CS1.dwg

DRAWING NO.	TITLE
C–1	COVER SHEET
C–2	LIST OF DRAWINGS AND GENERAL NOTES
C–3	SLUDGE PROCESS FLOW DIAGRAM
C–4.1	EXISTING SITE & DEMOLITION PLAN 1
C–4.2	EXISTING SITE & DEMOLITION PLAN 2
C–5	WWTP SITE UTILITY PLAN 1
C–6	WWTP SITE UTILITY PLAN 2
C–6.1	GRADING AND EROSION & SEDIMENT CONTROL PLAN 1
C–6.2	GRADING AND EROSION & SEDIMENT CONTROL PLAN 2
C–6.3	EROSION & SEDIMENT CONTROL NARRATIVE
C–6.4	EROSION & SEDIMENT CONTROL DETAILS
C–6.5	WWTP SITE UTILITY PLAN–OVERALL
C–6.6	UTILITY PROFILES
C–6.7	UTILITY PROFILES
C–6.8	PARTIAL HYDRAULIC PROFILE – HEADWORKS TO PRIMARY CLARIFIERS
C–7	EQ SPLITTER BOX – EXISTING CONDITIONS & DEMOLITION – PLAN & SECTION
C–8	HEADWORKS BUILDING (BUILDING #3) – EXISTING CONDITIONS & DEMOLITION – PLAN & SECTIONS
C–9	SEPTAGE RECEIVING STATION – EXISTING CONDITIONS & DEMOLITION – PLAN & SECTIONS
C–10	DRAIN PUMP STATION (BUILDING #8) – EXISTING CONDITIONS & DEMOLITION – PLAN & SECTIONS
C–11	PRIMARY CLARIFIER SLUDGE STATION – EXISTING CONDITIONS & DEMOLITION – PLAN & SECTION
C–12	GRAVITY THICKENER – EXISTING CONDITIONS & DEMOLITION – PLAN & SECTIONS
C–13	SECONDARY CLARIFIERS A & B – EXISTING CONDITIONS & DEMOLITION – PLAN & SECTIONS
C–14	RAS PUMP STATION NO. 1 – EXISTING CONDITIONS & DEMOLITION – PLAN & SECTIONS
C–15	ANAEROBIC DIGESTERS – EXISTING CONDITIONS & DEMOLITION – PLAN & SECTION
C–16	ANAEROBIC DIGESTERS – EXISTING CONDITIONS & DEMOLITION – SECTIONS
C–17	DIGESTER CONTROL (GAS RECOVERY) BUILDING (BUILDING #11) – EXISTING CONDITIONS & DEMOLITION – PLAN
C–18	SLUDGE PROCESSING BUILDING – EXISTING CONDITIONS & DEMOLITION – PLANS
C–19	SLUDGE PROCESSING BUILDING – EXISTING CONDITIONS & DEMOLITION – SECTIONS
C–20	EQ SPLITTER BOX – NEW WORK – PLAN & SECTIONS
C–20.1	PRIMARY CLARIFIER SPLITTER BOX – NEW WORK – PLAN & SECTION
C–21	HEADWORKS BUILDING (BUILDING #3) – NEW WORK – PLAN & SECTIONS
C–22	PARSHALL FLUME CHAMBER – NEW WORK – PLANS & SECTIONS
C–22.1	NOT USED
C–23	DRAIN PUMP STATION (BUILDING #8) – NEW WORK – PLAN & SECTIONS
C–23.1	ELECTRICAL BUILDING FOR DRAIN PUMP STATION – NEW WORK – PLAN & SECTIONS
C–24	PRIMARY CLARIFIER SLUDGE STATION – NEW WORK – PLAN & SECTIONS
C–25	NEW SEPTAGE RECEIVING STATION – PLAN & SECTIONS
C–26	SECONDARY CLARIFIERS A & B – CONVERTED TO AEROBIC DIGESTERS 3 & 4 – PLAN
C–27	SECONDARY CLARIFIERS A & B – CONVERTED TO AEROBIC DIGESTERS 3 & 4 – SECTIONS
C–28	ANAEROBIC DIGESTERS – CONVERTED TO AEROBIC DIGESTERS 1 & 2 – PLAN & SECTION
C–29	ANAEROBIC DIGESTERS – CONVERTED TO AEROBIC DIGESTERS 1 & 2 – SECTIONS
C–30	DIGESTER CONTROL (GAS RECOVERY) BUILDING – CONVERTED TO DIGESTER BLOWER BUILDING (BUILDING #11) – PLAN & SECTION
C–31	SLUDGE PROCESSING BUILDING – BASEMENT – NEW WORK – PLAN & SECTIONS
C–32	SLUDGE PROCESSING BUILDING – FIRST FLOOR (CENTRIFUGE) – NEW WORK – PLAN & SECTIONS
C–32.1	SLUDGE PROCESSING BUILDING – FIRST FLOOR (CENTRIFUGE MONORAIL) – NEW WORK – PLAN
C–33	SLUDGE PROCESSING BUILDING – CENTRIFUGE – NEW WORK – PIPING ISOMETRIC
C–34	SLUDGE THICKENING BUILDING (BUILDING #9) – NEW WORK – PLAN & SECTION
C–35	SLUDGE THICKENING BUILDING (BUILDING #9) – NEW WORK – SECTIONS
C–36	SLUDGE PROCESSING BUILDING (BUILDING #12) – NEW ROOFING WORK – PLAN & DETAILS
C–37	LAB/CONTROL BUILDING (BUILDING #13) – NEW ROOFING WORK – UPPER & LOWER ROOF PLANS
C–38	DRAIN PUMP STATION FORCE MAIN AT BNR SPLITTER BOX – NEW WORK – PLAN & SECTION
C–39	PROJECT DETAILS

DRAWING NO.	TITLE
S–1	SLUDGE BUILDING MONORAIL PLAN
S–2	SLUDGE BUILDING MONORAIL DETAILS & NOTES
S–3	NOT USED
S–4	PARSHALL FLUME CHAMBER – PLANS & SECTIONS
S–5	PRIMARY CLARIFIER SPLITTER BOX – PLAN & SECTIONS
S–6	STRUCTURAL DETAILS
I–1	PIPING & INSTRUMENTATION DIAGRAM – ABBREVIATIONS & LEGEND
I–2	PIPING & INSTRUMENTATION DIAGRAM – NEW CENTRIFUGE
I–3	PIPING & INSTRUMENTATION DIAGRAM – AEROBIC DIGESTERS 1 & 2
I–4	PIPING & INSTRUMENTATION DIAGRAM – AEROBIC DIGESTERS 3 & 4
E–1	LEGEND, ABBREVIATIONS AND GENERAL NOTES
E–2	HEADWORKS BUILDING #3 POWER DISTRIBUTION DETAILS
E–2.1	DRAIN PUMP STATION BUILDING #8 POWER DISTRIBUTION DETAILS
E–2.2	AEROBIC DIGESTERS 3 & 4 BLOWER STATION POWER DISTRIBUTION DETAILS
E–2.3	EXISTING SWBD AND SLUDGE PROCESSING BUILDING #12 POWER DISTRIBUTION DETAILS
E–3	DIGESTERS 1 & 2 BLOWER BUILDING #11 AND SLUDGE PROCESSING BLDG #12 POWER DISTRIBUTION DETAILS
E–4	OVERALL SITE PLAN
E–4.1	PARTIAL SITE PLAN, DIGESTERS 3 & 4 BLOWER FACILITIES POWER DISTRIBUTION DETAILS
E–5	PARTIAL WEST SIDE SITE PLAN
E–6	PARTIAL EAST SIDE SITE PLAN
E–6.1	DIGESTERS 1 & 2 STANDBY GENERATOR SITE PLAN
E–7	HEADWORKS BUILDING #3 ELECTRICAL PLANS
E–8	DRAIN PUMP STATION BUILDING #8 ELECTRICAL PLANS
E–9	SECONDARY CLARIFIERS A & B CONVERTED TO AEROBIC DIGESTERS 3 & 4 ELECTRICAL PLAN
E–10	ANAEROBIC DIGESTERS CONVERTED TO AEROBIC DIGESTERS 1 & 2 ELECTRICAL PLAN
E–11	DIGESTER CONTROL (GAS RECOVERY) BUILDING #11 CONVERTED TO DIGESTER BLOWER BUILDING ELECTRICAL PLAN
E–12	SLUDGE PROCESSING BUILDING #12 BASEMENT ELECTRICAL PLAN
E–13	SLUDGE PROCESSING BUILDING #12 FIRST FLOOR (CENTRIFUGE) ELECTRICAL PLAN
E–14	SLUDGE THICKENING BUILDING #9 ELECTRICAL PLAN
E–15	SEPTAGE RECEIVING STATION ELECTRICAL PLAN
E–16	DETAILS
E–16.1	DETAILS
E–16.2	DETAILS
E–16.3	DETAILS
E–16.4	CONTROL DIAGRAMS
E–17	SCHEDULES
E–18	SCHEDULES
E–19	SCHEDULES
E–20	SCHEDULES

GENERAL NOTES

1. PHYSICAL FEATURES, PROPERTY BOUNDARIES, AND UNDERGROUND UTILITY LOCATIONS ARE BASED ON RECORD DRAWINGS GRID IS BASED ON VIRGINIA STATE PLANE COORDINATE SYSTEM NORTH ZONE, NAD–83(93). VERTICAL DATUM IS BASED ON NAVD88.
2. ALL WORK SHALL BE PERFORMED IN ACCORDANCE WITH THESE DRAWINGS AND THE LATEST EDITION OF THE VIRGINIA DEPARTMENT OF ENVIRONMENTAL QUALITY (DEQ) SEWAGE COLLECTION AND TREATMENT (SCAT) REGULATIONS. THE CONTRACTOR SHALL MAINTAIN A COPY OF THE CONTRACT DRAWINGS AND PROJECT MANUAL AT THE PROJECT SITE AT ALL TIMES DURING CONSTRUCTION.
3. THE LOCATION, DIMENSIONS, AND ELEVATION OF EXISTING STRUCTURES, PIPING, AND UTILITIES SHOWN ARE BASED ON THE BEST AVAILABLE DATA AND ARE APPROXIMATE. THE CONTRACTOR SHALL VERIFY ALL DATA IN THE FIELD PRIOR TO CONSTRUCTION TO HIS OWN SATISFACTION. THE DIAMETERS OF EXISTING PIPING ARE APPROXIMATE AND SHALL BE VERIFIED PRIOR TO PERFORMING FINAL CONNECTIONS. THE CONTRACTOR SHALL LOCATE ALL UTILITIES AND/OR PROVIDE LOCATION SERVICE AT NO ADDITIONAL COST TO THE OWNER TO AVOID CONFLICTS WITH EXISTING UTILITIES OR STRUCTURES. THE CONTRACTOR SHALL "POTHOLE" UTILITIES TO DETERMINE THEIR ACTUAL DEPTH AND LOCATION.
4. THE FLOOD INSURANCE RATE MAP (FIRM) FOR CULPEPER COUNTY, VIRGINIA (COMMUNITY PANEL No. 51047C0230D), DATED FEBRUARY 26, 2021, INDICATES THE PROJECT SITE IS LOCATED IN ZONE X, AN AREA DETERMINED TO BE OUTSIDE THE 1.0% ANNUAL CHANCE FLOODPLAIN.
5. CHANGES IN NEW PIPING FROM THAT SHOWN ON THE DRAWINGS, IN ORDER TO AVOID CONFLICTS WITH EXISTING ELECTRICAL SYSTEMS, MECHANICAL SYSTEMS, EQUIPMENT, STRUCTURES, OR EXISTING PIPING, SHALL BE THE RESPONSIBILITY OF THE CONTRACTOR, WHETHER THE CONFLICTS ARE SHOWN OR ARE DISCOVERED IN THE FIELD. LIKEWISE, ALTERATIONS TO EXISTING ELECTRICAL SYSTEMS, MECHANICAL SYSTEMS, EQUIPMENT, OR EXISTING PIPING IN ORDER TO ACCOMMODATE NEW PIPING AND EQUIPMENT SHALL BE THE RESPONSIBILITY OF THE CONTRACTOR AT NO ADDITIONAL COST TO THE OWNER. THE OWNER AND THE ENGINEER MUST APPROVE ALL SUCH CHANGES.
6. MAINTAIN AND PROTECT ALL OVERHEAD AND UNDERGROUND ELECTRICAL, TELEPHONE, WATER, GAS, AND ALL OTHER UTILITIES DURING ENTIRE CONSTRUCTION PERIOD. SANITARY SEWER AND WATER SERVICE INTERRUPTIONS AND OTHER UTILITY OUTAGES WILL NOT BE ALLOWED.
7. PROVIDE RESTRAINING DEVICES FOR BURIED PRESSURE PIPING AT ALL VALVES, FITTINGS, AND DEAD ENDS PER SPEC. SECTION 02730. INSTALLATION OF MECHANICAL RESTRAINING DEVICES SHALL BE PERFORMED IN ACCORDANCE WITH THE MANUFACTURER'S WRITTEN RECOMMENDATIONS.
8. ALL UNDERGROUND PIPING SHALL MAINTAIN A MINIMUM COVER OF 3.50 FEET UNLESS OTHERWISE INDICATED. NEW PIPING SHALL BE INSTALLED AS REQUIRED TO ALLOW FOR MINIMUM 18 INCHES OF VERTICAL SEPARATION BETWEEN NEW PIPING AND EXISTING UTILITIES. A POSITIVE GRADE SHALL BE MAINTAINED FOR THE VERTICAL ALIGNMENT OF ALL NEW PRESSURE PIPING TO ELIMINATE THE FORMATION OF AIR POCKETS.
9. PLUG VALVES AND VALVE BOXES: PROVIDE AN EXTENDED VALVE STEM WHERE DEPTH TO TOP OF VALVE EXCEEDS 5 FEET.
10. HORIZONTAL DISTANCE IS INDICATED FOR ALL NEW PIPE LENGTHS SHOWN ON THE DRAWINGS. NEW PIPE LENGTHS SHOWN ARE MEASURED BETWEEN MANHOLE CENTERLINES. VERTICAL PIPE FITTINGS ARE NOT SHOWN ON THE DRAWINGS FOR CLARITY. THE CONTRACTOR SHALL PROVIDE VERTICAL PIPE FITTINGS AS REQUIRED FOR COMPLETE AND OPERABLE PIPE INSTALLATIONS.
11. PROVIDE ALL CONNECTING PIECES AND TRANSITION PIECES REQUIRED TO MAKE FINAL PIPING CONNECTIONS.
12. PROVIDE A MINIMUM OF 18 INCHES CLEARANCE BETWEEN PIPING AND FOOTINGS, STRUCTURES, AND OTHER PIPING UNLESS OTHERWISE INDICATED.
13. VEGETATIVE AND STRUCTURAL EROSION AND SEDIMENT CONTROL DEVICES SHALL BE CONSTRUCTED AND MAINTAINED FOR ALL DISTURBED AREAS IN ACCORDANCE WITH ALL LOCAL REQUIREMENTS AND THE LATEST EDITION OF THE VIRGINIA EROSION AND SEDIMENT CONTROL HANDBOOK. ALL EROSION AND SEDIMENTATION CONTROL DEVICES SHALL BE INSTALLED AS A FIRST STEP IN CONSTRUCTION AND BEFORE EXCAVATION BEGINS.
14. CONSTRUCTION LIMITS SHALL INCLUDE ALL DISTURBED AREAS. ALL DISTURBED AREAS SHALL BE SEEDED AND PROVIDED WITH EROSION CONTROL DURING AND AT THE END OF CONSTRUCTION.
15. UNLESS OTHERWISE NOTED, REMOVE AND DISPOSE OF ALL STRUCTURES AND OTHER ITEMS INDICATED TO BE DEMOLISHED OFF THE OWNER'S PROPERTY IN ACCORDANCE WITH ALL FEDERAL, STATE, AND LOCAL REGULATIONS.
16. THE CONTRACTOR SHALL COMPLY WITH ALL FEDERAL, STATE, AND LOCAL CONFINED SPACE ENTRY REGULATIONS.
17. THE CONTRACTOR SHALL MAINTAIN SURFACE DRAINAGE DURING CONSTRUCTION. THE CONTRACTOR SHALL PROVIDE ALL PUMPS AND PIPING REQUIRED TO MAINTAIN SURFACE DRAINAGE.
18. CONSTRUCT EXCAVATION SUPPORT SYSTEMS AS REQUIRED BY OSHA AND U.S. ARMY CORPS OF ENGINEERS SAFETY & HEALTH REQUIREMENTS MANUAL EM 385–1–1, SECTIONS 25A AND 25B, AND WHERE INDICATED ON THE DRAWINGS TO ADEQUATELY SUPPORT EXISTING SOIL AND ADJACENT STRUCTURES DURING EXCAVATION ACTIVITIES.
19. ANY FENCING DISTURBED BY CONSTRUCTION SHALL BE IMMEDIATELY REPLACED OR SUPPLEMENTED BY TEMPORARY FENCING SUITABLE FOR INTENDED PURPOSE OF EXISTING FENCING. THE CONTRACTOR SHALL REPAIR AND/OR REPLACE DISTURBED FENCING TO ORIGINAL CONDITION.
20. ALL DRIVEWAYS, PARKING LOTS, AND ROADS DISTURBED BY CONSTRUCTION ACTIVITIES SHALL BE SAW CUT AND REPLACED WITH 21A STONE. TOWN WILL PROVIDE PERMANENT ASPHALT PAVING. ALL GRAVEL PAVEMENT DISTURBED BY CONSTRUCTION ACTIVITIES SHALL BE REPLACED TO ORIGINAL CONDITION. TRACKED EQUIPMENT WILL NOT BE ALLOWED ON ASPHALT OR CONCRETE PAVED SURFACES.
21. ALL PROPERTY PINS DISTURBED DURING CONSTRUCTION SHALL BE REPLACED BY A LAND SURVEYOR LICENSED BY THE COMMONWEALTH OF VIRGINIA.
22. PROPOSED MANHOLE RIM ELEVATIONS SHOWN ON THE DRAWINGS ARE APPROXIMATE. THE CONTRACTOR SHALL CONFIRM ACTUAL GRADE ELEVATIONS AND ADJUST RISERS TO SET RIMS TO FINISHED GRADE. MANHOLES NOT IN PAVEMENT SHALL BE LOCATED ABOVE THE DRAINAGE WAY OF DITCHES AND SHALL NOT ALLOW INTRUSION OF STORM WATER INTO MANHOLE COVERS. ALL VALVE BOX TOPS SHALL BE SET TO FINISHED GRADE.
23. HEAT TRACE, INSULATE AND PROVIDE ALUMINUM JACKET FOR ALL ABOVEGROUND PIPING. EXTEND INSULATION SYSTEM 18" BELOW GROUND SURFACE. PROVIDE ELECTRICAL CIRCUITS FOR ALL HEAT TRACING, WHETHER INDICATED ON THE DRAWINGS OR NOT.
24. SEE DWG C–7 FOR DEMOLITION NOTES.

SITE DATA:

OWNER INFORMATION

NAME:	TOWN OF CULPEPER, VA
CONTACT:	JIM E. HOY III, P.E. DIRECTOR OF PUBLIC SERVICES
ADDRESS:	15048 SERVICE LANE CULPEPER, VA 22701

ENGINEER INFORMATION

NAME:	WW ASSOCIATES, INC.
CONTACT:	HERBERT F. WHITE, III, P.E.
ADDRESS:	P.O. BOX 4119 LYNCHBURG, VA 24502
TELEPHONE:	(434) 316–6080
E–MAIL:	HWHITE@WWASSOCIATES.NET
COUNTY, STATE:	CULPEPER COUNTY, VA
MAGISTERIAL DISTRICT:	STEVENSBURG
TAX MAP REFERENCES:	41–97A 2 PTS.
ZONING:	RA (RURAL AREA)

NO.	SHEET REVISION	BY	DATE	NO.	SHEET REVISION	BY	DATE

COMMONWEALTH OF VIRGINIA
JASON A. CLARK
Lic. No. 33605
4/29/2022
PROFESSIONAL ENGINEER

WW ENGINEERS SURVEYORS PLANNERS ASSOCIATES
PO Box 4119 Lynchburg, VA 24502 Phone: 434.316.6080
968 Olympia Drive, Suite 1 Charlottesville, VA 22911 Phone: 434.984.2700
www.wwassociates.net

DESIGNED BY: JAC	PROJECT: WASTEWATER TREATMENT PLANT IMPROVEMENTS TOWN OF CULPEPER, VIRGINIA		SET REV. NO. –
DRAWN BY: DJC	TITLE: LIST OF DRAWINGS AND GENERAL NOTES		DRAWING NUMBER: C–2
DIHR BY: HFW			
WWA NUMBER: 221028.00	FILE NAME: 102800I_CS2.dwg	DISCIPLINE: CIVIL	SCALE: H: N/A V: N/A	DATE: 4/29/22

M:\221028 Town of Culpeper WWTP Improvements\221028.00 Design\102800I_CS2.dwg

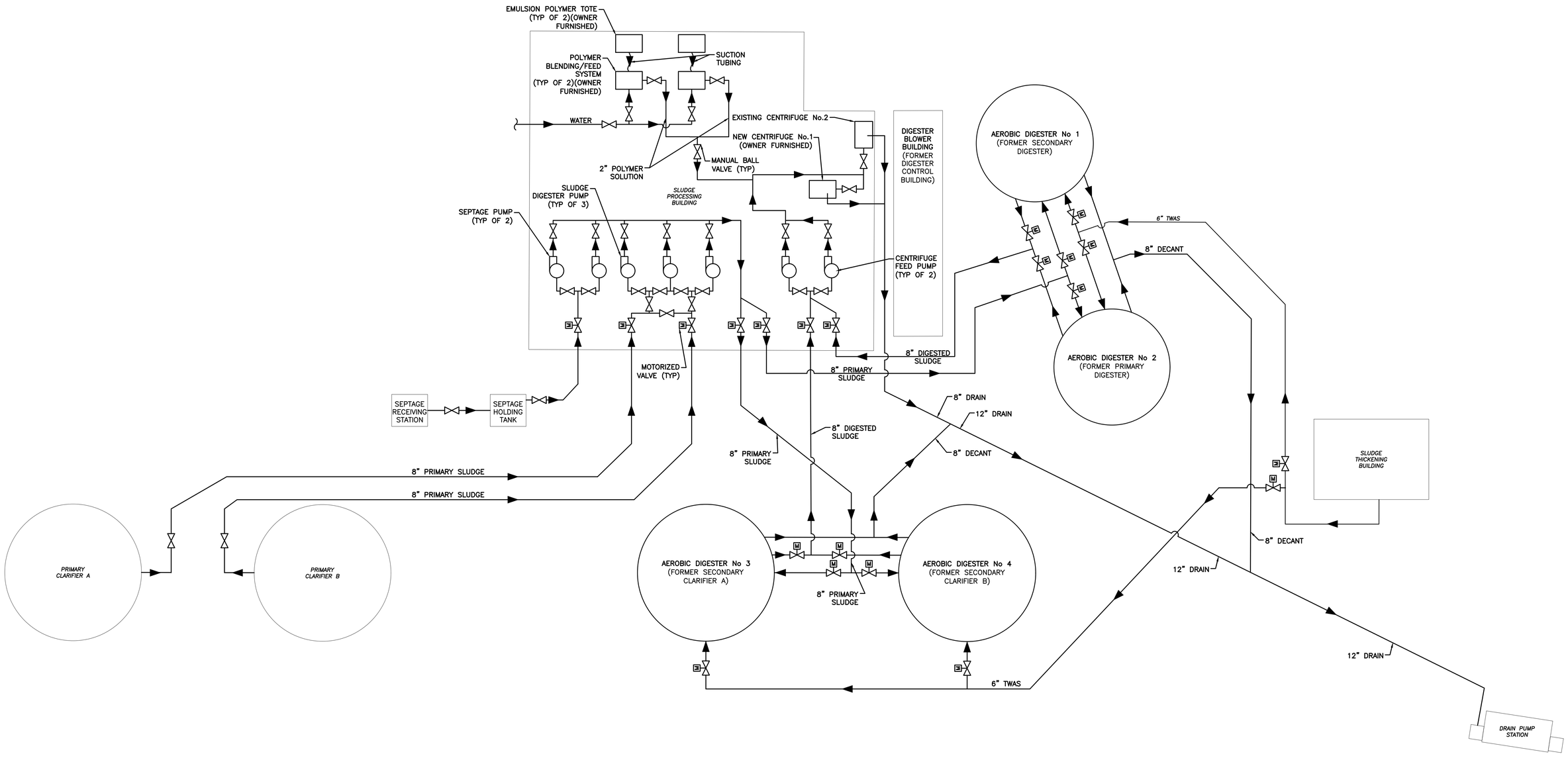

NEW SLUDGE PROCESS FLOW DIAGRAM
SCALE: NOT TO SCALE

M:\221028 Town of Culpeper WWTP Improvements\221028.00 Design\102800L_I2.dwg

NO.	SHEET REVISION	BY	DATE	NO.	SHEET REVISION	BY	DATE

COMMONWEALTH OF VIRGINIA
JASON A. CLARK
Lic. No. 33605
4/29/2022
PROFESSIONAL ENGINEER

WWA ENGINEERS SURVEYORS PLANNERS ASSOCIATES
PO Box 4119 Lynchburg, VA 24502 Phone: 434.316.6080
968 Olympia Drive, Suite 1 Charlottesville, VA 22911 Phone: 434.984.2700
www.wwassociates.net

DESIGNED BY: JAC	PROJECT: WASTEWATER TREATMENT PLANT IMPROVEMENTS TOWN OF CULPEPER, VIRGINIA		SET REV. NO. –
DRAWN BY: WAM/DJC	TITLE: SLUDGE PROCESS FLOW DIAGRAM		DRAWING NUMBER: C–3
DIHR BY: HFW			
WWA NUMBER: 221028.00	FILE NAME: 102800L_I2.dwg	DISCIPLINE: CIVIL	SCALE: H: N.T.S. V: N/A	DATE: 4/29/22

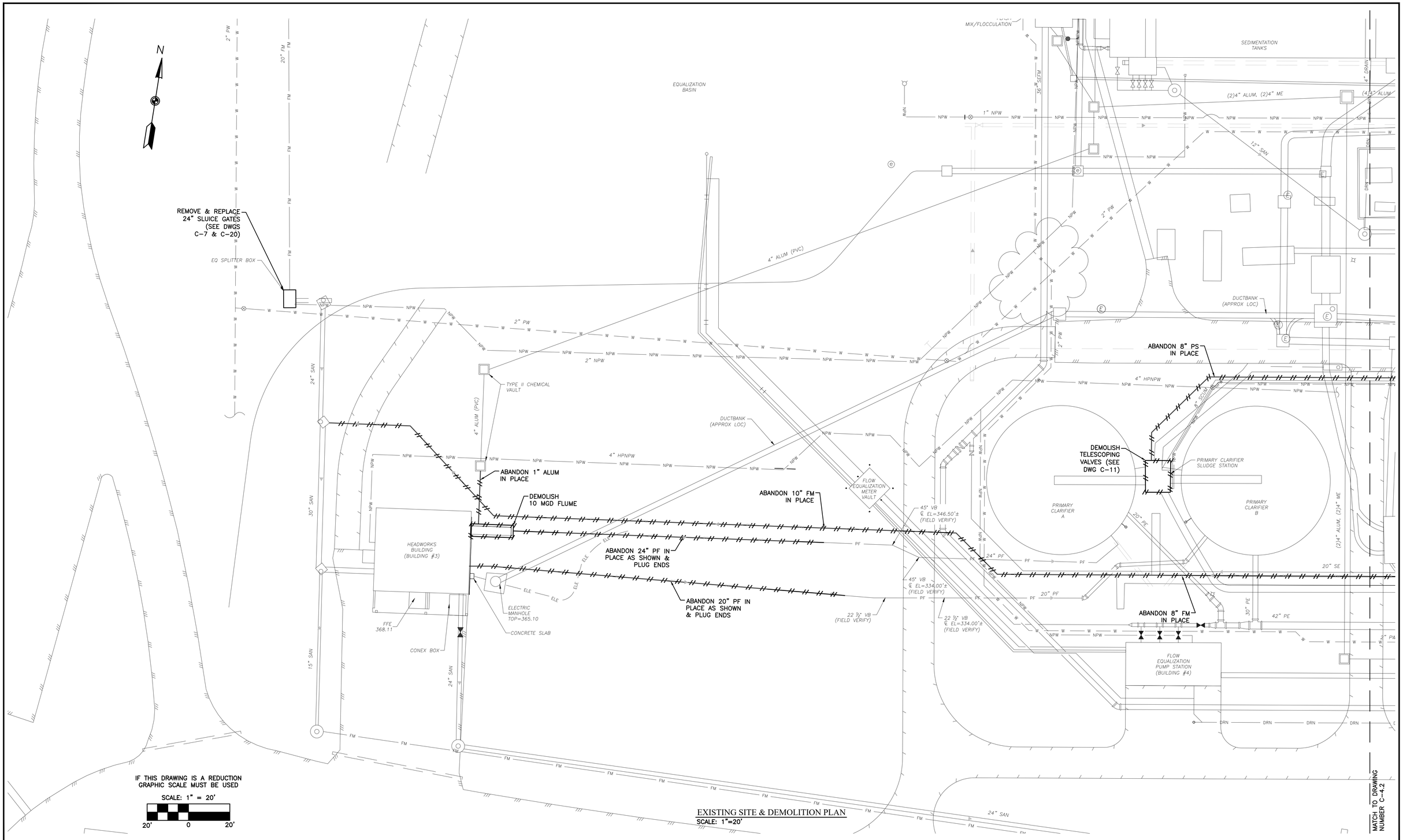

EXISTING SITE & DEMOLITION PLAN
SCALE: 1"=20'

M:\221028 Town of Culpeper WWTP Improvements\221028.00 Design\102800L_SP1.dwg

NO.	SHEET REVISION	BY	DATE	NO.	SHEET REVISION	BY	DATE

COMMONWEALTH OF VIRGINIA
JASON A. CLARK
Lic. No. 33605
4/29/2022
PROFESSIONAL ENGINEER

WWA ASSOCIATES
ENGINEERS SURVEYORS PLANNERS
PO Box 4119, Lynchburg, VA 24502, Phone: 434.316.6080
968 Olympia Drive, Suite 1, Charlottesville, VA 22911, Phone: 434.984.2700
www.wwassociates.net

DESIGNED BY: JAC	PROJECT: WASTEWATER TREATMENT PLANT IMPROVEMENTS TOWN OF CULPEPER, VIRGINIA		SET REV. NO. —
DRAWN BY: WAM	TITLE: EXISTING SITE & DEMOLITION PLAN 1		DRAWING NUMBER: C-4.1
DIHR BY: HFW			
WWA NUMBER: 221028.00	FILE NAME: 102800L_SP1.dwg	DISCIPLINE: CIVIL	SCALE: H: AS SHOWN V: N/A	DATE: 4/29/22

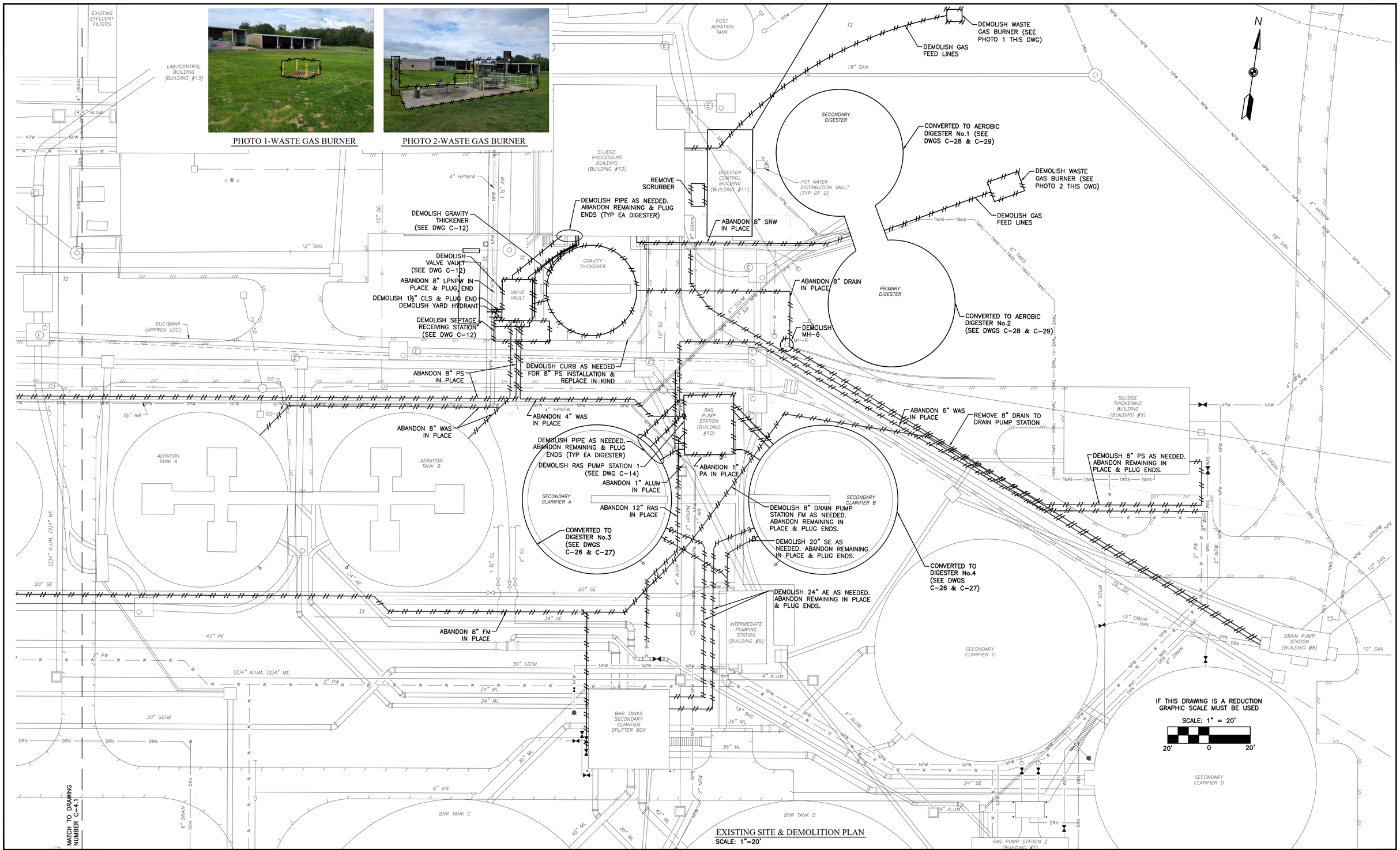

EXISTING SITE & DEMOLITION PLAN
SCALE: 1"=20'

NO.	SHEET REVISION	BY	DATE	NO.	SHEET REVISION	BY	DATE

COMMONWEALTH OF VIRGINIA
JASON A. CLARK
Lic. No. 33605
4/29/2022
PROFESSIONAL ENGINEER

WW ASSOCIATES
ENGINEERS SURVEYORS PLANNERS
PO Box 4119 Lynchburg, VA 24502 Phone: 434.316.6080
968 Olympia Drive, Suite 1 Charlottesville, VA 22911 Phone: 434.984.2700
www.wwassociates.net

DESIGNED BY: JAC	PROJECT: WASTEWATER TREATMENT PLANT IMPROVEMENTS TOWN OF CULPEPER, VIRGINIA		SET REV. NO. –
DRAWN BY: WAM	TITLE: EXISTING SITE & DEMOLITION PLAN 2		DRAWING NUMBER: C-4.2
DIHR BY: HFW			
WWA NUMBER: 221028.00	FILE NAME: 102800L_SP3.dwg	DISCIPLINE: CIVIL	SCALE: H: AS SHOWN V: N/A	DATE: 4/29/22

M:\221028 Town of Culpeper WWTP Improvements\221028.00 Design\102800L_SP3.dwg

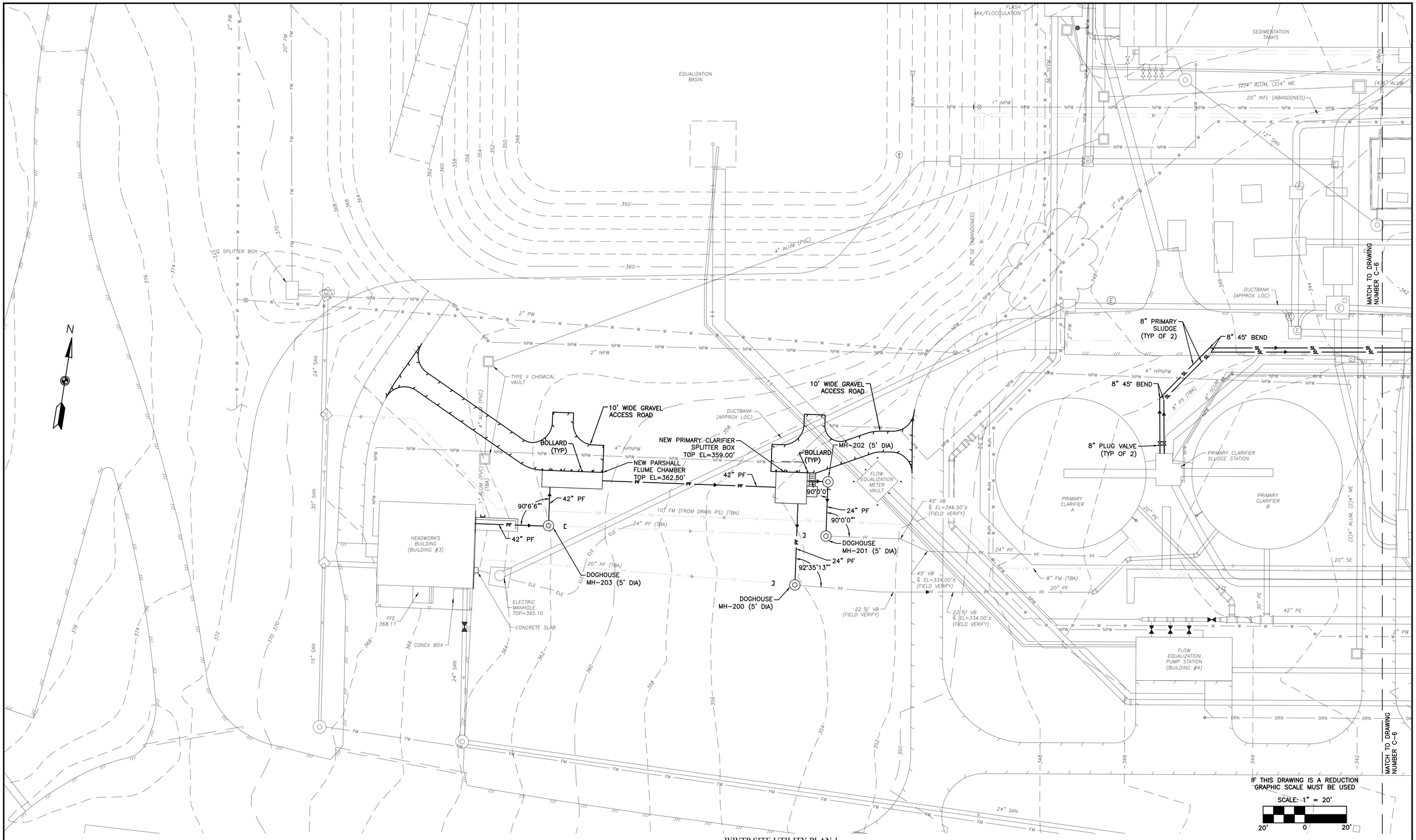

WWTP SITE UTILITY PLAN 1

SCALE: 1"=20'

NO.	SHEET REVISION	BY	DATE	NO.	SHEET REVISION	BY	DATE

COMMONWEALTH OF VIRGINIA
JASON A. CLARK
Lic. No. 33605
4/29/2022
PROFESSIONAL ENGINEER

WWA ASSOCIATES
ENGINEERS SURVEYORS PLANNERS
PO Box 4119 Lynchburg, VA 24502 Phone: 434.316.6080
968 Olympia Drive, Suite 1 Charlottesville, VA 22911 Phone: 434.984.2700
www.wwassociates.net

DESIGNED BY: JAC	PROJECT: WASTEWATER TREATMENT PLANT IMPROVEMENTS TOWN OF CULPEPER, VIRGINIA		SET REV. NO. –
DRAWN BY: WAM	TITLE: SITE UTILITY PLAN 1		DRAWING NUMBER: C-5
DIHR BY: HFW			
WWA NUMBER: 221028.00	FILE NAME: 102800L_SP4.dwg	DISCIPLINE: CIVIL	SCALE: H: AS SHOWN V: N/A	DATE: 4/29/22

M:\221028 Town of Culpeper WWTP Improvements\221028.00 Design\102800L_SP4.dwg

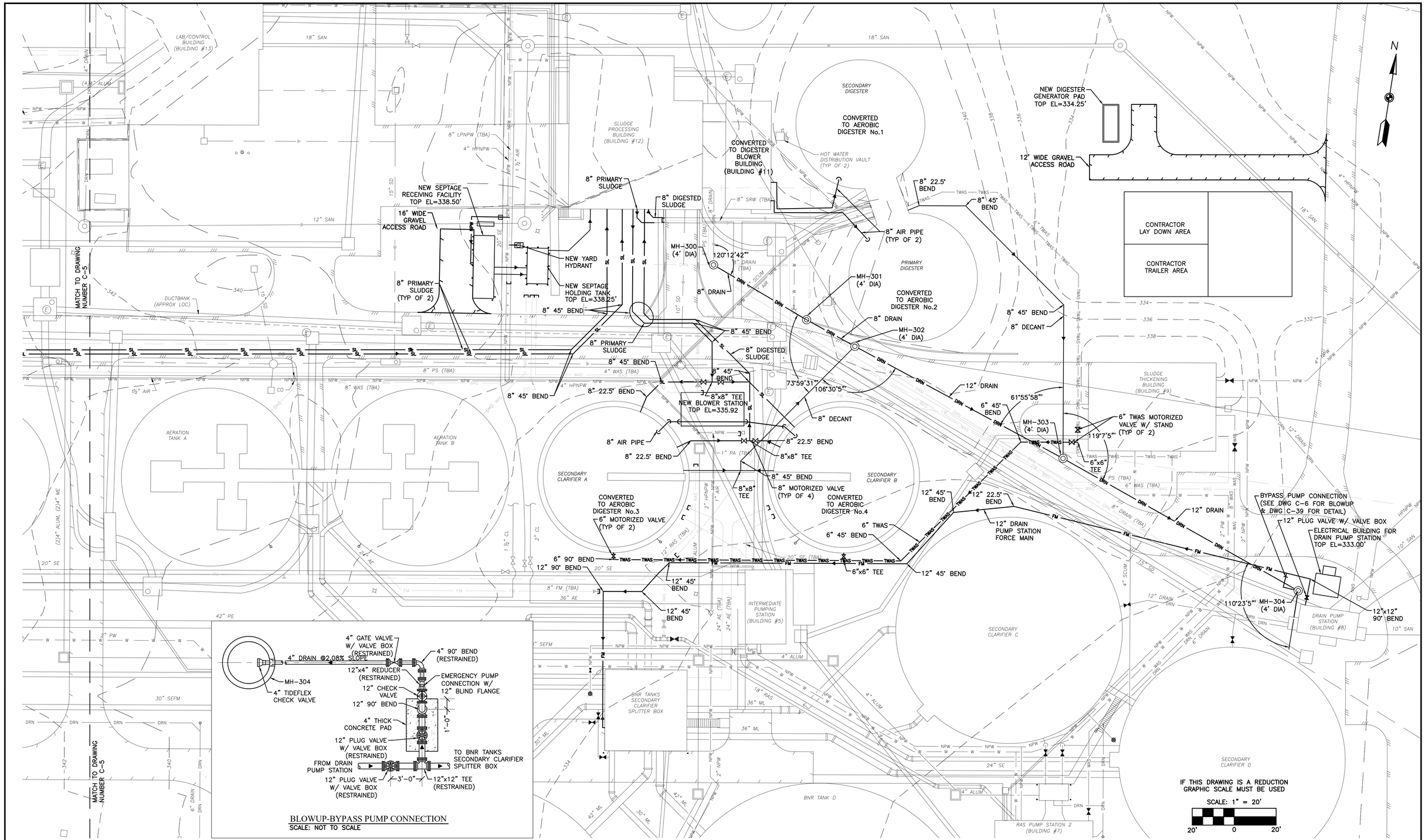

SITE UTILITY PLAN 2
SCALE: 1"=20'

NO.	SHEET REVISION	BY	DATE	NO.	SHEET REVISION	BY	DATE

COMMONWEALTH OF VIRGINIA
JASON A. CLARK
Lic. No. 33605
4/29/2022
PROFESSIONAL ENGINEER

WWA ASSOCIATES
ENGINEERS SURVEYORS PLANNERS
PO Box 4119 Lynchburg, VA 24502 Phone: 434.316.6080
968 Olympia Drive, Suite 1 Charlottesville, VA 22911 Phone: 434.984.2700
www.wwassociates.net

DESIGNED BY: JAC	PROJECT: WASTEWATER TREATMENT PLANT IMPROVEMENTS TOWN OF CULPEPER, VIRGINIA		SET REV. NO. –
DRAWN BY: WAM	TITLE: SITE UTILITY PLAN 2		DRAWING NUMBER: C-6
DIHR BY: HFW			
WWA NUMBER: 221028.00	FILE NAME: 102800L_SP5.dwg	DISCIPLINE: CIVIL	SCALE: H: AS SHOWN V: N/A	DATE: 4/29/22

M:\221028 Town of Culpeper WWTP Improvements\221028.00 Design\102800L_SP5.dwg

EROSION AND SEDIMENT CONTROL LEGEND

3.02	TEMPORARY STONE CONSTRUCTION ENTRANCE	CE
3.05	SILT FENCE	SF
3.07	STORM DRAIN INLET PROTECTION	IP
3.31	TEMPORARY SEEDING	TS
3.32	PERMANENT SEEDING	PS
3.35	MULCHING	MU
3.36	SOIL STABILIZATION BLANKETS & MATTING	B/M

LIMITS OF DISTURBANCE

DRAINAGE AREA DIVIDE

EIB / EnC3 = EXISTING SOIL TYPE AND BOUNDARY

IF THIS DRAWING IS A REDUCTION GRAPHIC SCALE MUST BE USED

SCALE: 1" = 20'

20' 0 20'

N

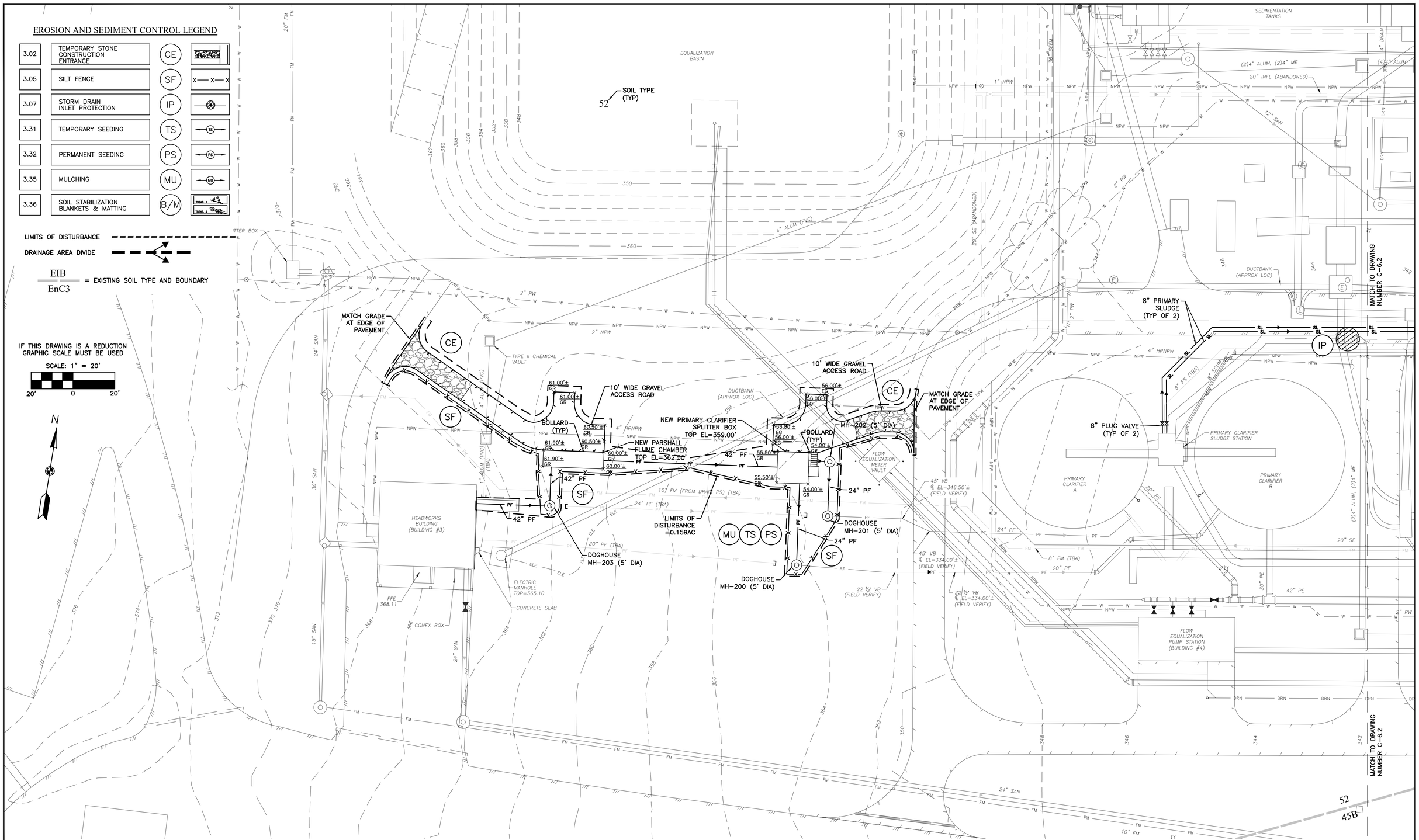

GRADING AND EROSION & SEDIMENT CONTROL PLAN 1

SCALE: 1"=20'

NO.	SHEET REVISION	BY	DATE	NO.	SHEET REVISION	BY	DATE

COMMONWEALTH OF VIRGINIA
JASON A. CLARK
Lic. No. 33605
4/29/2022
PROFESSIONAL ENGINEER

WW ENGINEERS SURVEYORS PLANNERS ASSOCIATES
PO Box 4119 Lynchburg, VA 24502 Phone: 434.316.6080
968 Olympia Drive, Suite 1 Charlottesville, VA 22911 Phone: 434.984.2700
www.wwassociates.net

DESIGNED BY: JAC	PROJECT: WASTEWATER TREATMENT PLANT IMPROVEMENTS TOWN OF CULPEPER, VIRGINIA		SET REV. NO. –
DRAWN BY: WAM	TITLE: GRADING AND EROSION & SEDIMENT CONTROL PLAN 1		DRAWING NUMBER: C-6.1
DIHR BY: HFW			
WWA NUMBER: 221028.00	FILE NAME: 102800L_ENS-1.dwg	DISCIPLINE: CIVIL	SCALE: H: AS SHOWN V: N/A
			DATE: 4/29/22

M:\221028 Town of Culpeper WWTP Improvements\221028.00 Design\102800L_ENS-1.dwg

EROSION AND SEDIMENT CONTROL LEGEND

3.02	TEMPORARY STONE CONSTRUCTION ENTRANCE	CE	
3.05	SILT FENCE	SF	x—x—x
3.07	STORM DRAIN INLET PROTECTION	IP	
3.31	TEMPORARY SEEDING	TS	
3.32	PERMANENT SEEDING	PS	
3.35	MULCHING	MU	
3.36	SOIL STABILIZATION BLANKETS & MATTING	B/M	TREAT. 1 TREAT. 2

LIMITS OF DISTURBANCE

DRAINAGE AREA DIVIDE

EIB / EnC3 = EXISTING SOIL TYPE AND BOUNDARY

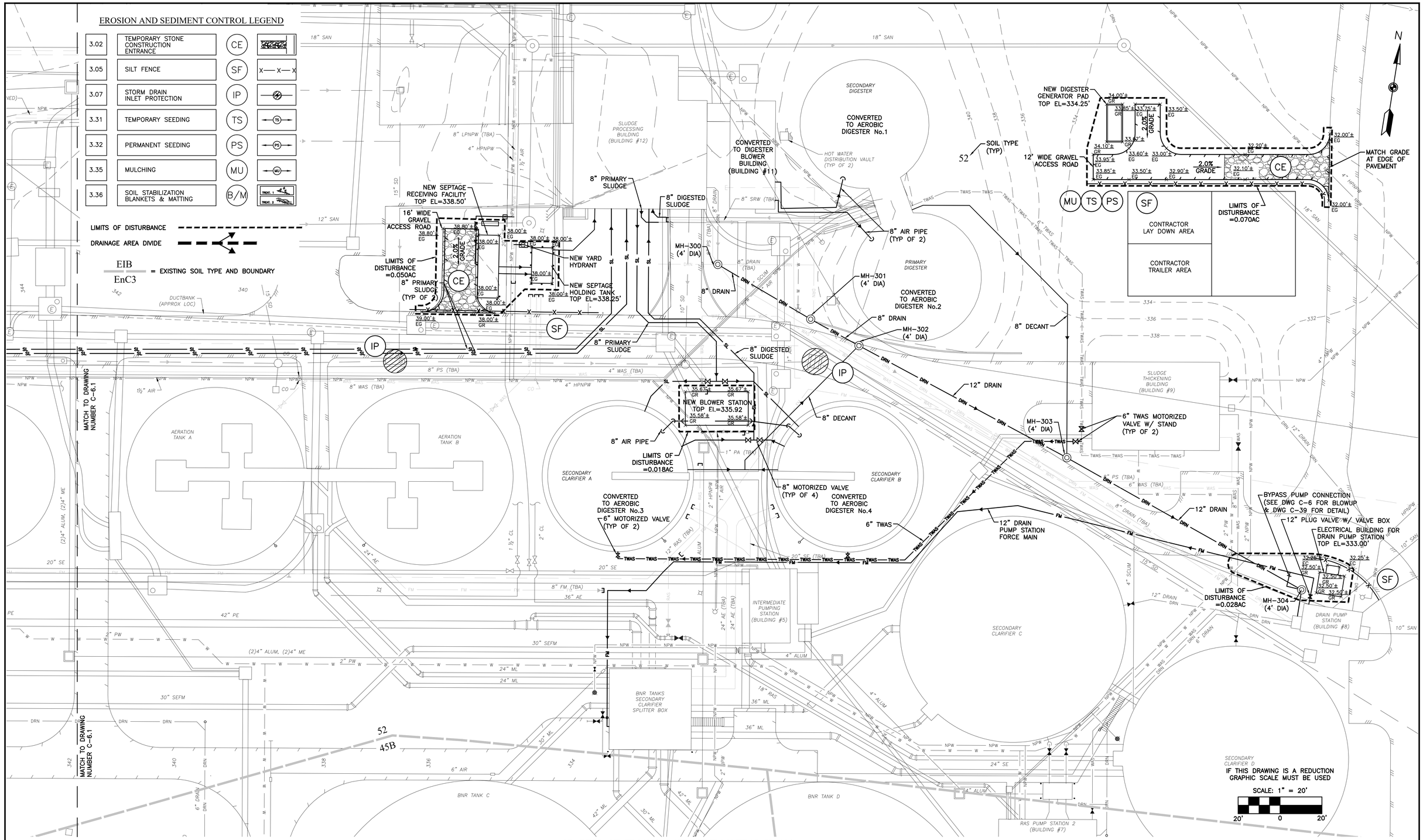

GRADING AND EROSION & SEDIMENT CONTROL PLAN 2

SCALE: 1"=20'

NO.	SHEET REVISION	BY	DATE

NO.	SHEET REVISION	BY	DATE

COMMONWEALTH OF VIRGINIA
JASON A. CLARK
Lic. No. 33605
4/29/2022
PROFESSIONAL ENGINEER

WW ASSOCIATES
ENGINEERS SURVEYORS PLANNERS
PO Box 4119, Lynchburg, VA 24502, Phone: 434.316.6080
968 Olympia Drive, Suite 1, Charlottesville, VA 22911, Phone: 434.984.2700
www.wwassociates.net

DESIGNED BY: JAC	PROJECT: WASTEWATER TREATMENT PLANT IMPROVEMENTS TOWN OF CULPEPER, VIRGINIA		SET REV. NO. –
DRAWN BY: WAM	TITLE: GRADING AND EROSION & SEDIMENT CONTROL PLAN 2		DRAWING NUMBER: C-6.2
DIHR BY: HFW			
WWA NUMBER: 221028.00	FILE NAME: 102800L_ENS-2.dwg	DISCIPLINE: CIVIL	SCALE: H: AS SHOWN V: N/A
			DATE: 4/29/22

M:\221028 Town of Culpeper WWTP Improvements\221028.00 Design\102800L_ENS-2.dwg

EROSION & SEDIMENT CONTROL NARRATIVE

I. PROJECT DESCRIPTION

THIS PROJECT ENCOMPASSES THE CONSTRUCTION OF VARIOUS CAPITAL IMPROVEMENTS AT THE EXISTING TOWN OF CULPEPER WASTEWATER TREATMENT PLANT. THE IMPROVEMENTS FOR THIS PLAN WILL INVOLVE DISTURBING APPROXIMATELY 0.32 ACRES.

II. EXISTING SITE CONDITIONS

THE PROJECT SITE IS LOCATED AT THE EXISTING TOWN OF CULPEPER WASTEWATER TREATMENT PLANT LOCATION ON SERVICE LANE. THE SITE IS MOSTLY A GRASSED AREA WITH ASPHALT AND GRAVEL PAVED ACCESS ROADS. THE SITE SLOPES WEST TO EAST TOWARD MOUNTAIN RUN.

III. ADJACENT PROPERTIES

THE SITE IS BOUNDED TO THE WEST BY KEYSER ROAD AND MCDEVITT DRIVE, TO THE EAST BY MOUNTAIN RUN, TO THE NORTH BY AGRICULTURAL AREAS, AND TO THE SOUTH BY UNDEVELOPED GRASSED/FORESTED AREAS.

IV. OFF-SITE AREAS

EXCESS SOIL AND WASTE SOILS WILL BE HAULED OFFSITE. THESE AREAS WILL BE DETERMINED AT A LATER DATE AND COVERED UNDER A SEPARATE EROSION AND SEDIMENT CONTROL PLAN AS REQUIRED.

V. SOILS

45B – PENN NESTORIA COMPLEX
2–7% SLOPES, WELL DRAINED
HYDROLOGIC SOIL GROUP C/D
K FACTOR, WHOLE SOIL RATING = 0.43
Ksat = 0.00 in/hr

52 – UDORTHENTS, SMOOTH – URBAN LAND
0–7% SLOPES

VI. CRITICAL AREAS

CRITICAL AREAS INCLUDE THE PORTION OF THE SITE ADJACENT TO MOUNTAIN RUN. ALL EROSION AND SEDIMENT CONTROL MEASURES SHOWN ON THE EROSION AND SEDIMENT CONTROL PLAN SHALL BE CONSTRUCTED BEFORE LAND DISTURBANCE ACTIVITIES MAY OCCUR TO CONTAIN SEDIMENT ONSITE AND PROTECT DOWNSTREAM PROPERTIES AND WATERWAYS. CONSTRUCTION ENTRANCES SHALL BE PROVIDED TO PREVENT TRACKING OF SEDIMENT ONTO PAVED AREAS BY CONSTRUCTION VEHICLES. ALL EROSION AND SEDIMENT CONTROL MEASURES SHALL BE INSPECTED AND REPAIRED AS NECESSARY AFTER EVERY STORM EVENT. CARE SHALL BE TAKEN TO STABILIZE ALL SLOPES AND PREVENT EROSION.

VII. STORMWATER MANAGEMENT CONSIDERATIONS

STORMWATER MANAGEMENT IS NOT REQUIRED AS THE TOTAL DISTURBANCE IS LESS THAN 1 ACRE.
STORMWATER FROM THE SITE IS BEING DISCHARGED VIA SHEET FLOW OR CONVERTED SHEET FLOW VIA OUTLET PROTECTION. THE SHEET FLOW HAS BEEN ANALYZED FOR VOLUME, EROSION, SEDIMENTATION, AND FLOODING. AS LONG AS PROPERLY STABILIZED GROWTH ON THE SLOPES IS PRESENT, THERE WILL BE NO EROSION OR NEGATIVE EFFECTS TO THE SITE AND THEREFORE, MS-19 HAS BEEN SATISFIED.

VIII. EROSION AND SEDIMENT CONTROL MEASURES

ALL VEGETATIVE AND STRUCTURAL EROSION AND SEDIMENT CONTROL PRACTICES SHALL BE CONSTRUCTED AND MAINTAINED BY THE CONTRACTOR IN ACCORDANCE WITH THE LATEST EDITION OF THE VIRGINIA EROSION AND SEDIMENT CONTROL HANDBOOK. SYMBOLS, DETAILS, AND DIMENSIONS USED ARE TAKEN FROM THE HANDBOOK, AS WELL AS THE VIRGINIA DEPARTMENT OF TRANSPORTATION'S ROAD AND BRIDGE STANDARDS, VOLUMES I AND II, 2016.

A. STRUCTURAL PRACTICES

1. TEMPORARY CONSTRUCTION ENTRANCE (CE), 3.02: TEMPORARY CONSTRUCTION ENTRANCES SHALL BE PROVIDED TO MINIMIZE THE TRANSPORT OF SEDIMENT OFF-SITE BY VEHICULAR TRAFFIC. SEDIMENT SHALL BE PREVENTED FROM ENTERING STORM DRAINS, DITCHES OR WATERCOURSES.
2. SILT FENCE (SF), 3.05: SHALL BE PROVIDED TO INTERCEPT AND FILTER SEDIMENT FROM DISTURBED AREAS.
3. STORM DRAIN INLET PROTECTION (IP), 3.07: INLET PROTECTION SHALL BE PROVIDED TO PREVENT SEDIMENT LADEN RUNOFF FROM ENTERING STORM DRAINS AND CULVERTS.
4. STORMWATER CONVEYANCE CHANNEL (SCC), 3.17: INSTALL AS SHOWN ON PLAN TO CONVEY CONCENTRATED STORMWATER RUNOFF TO A RECEIVING CHANNEL OR SYSTEM WITHOUT CAUSING EROSION.
5. OUTLET PROTECTION (OP), 3.18: INSTALL AT THE PIPE OUTFALL AS SHOWN ON PLANS TO PREVENT SCOUR AND MINIMIZE DOWNSTREAM EROSION.
6. SOIL STABILIZATION BLANKETS & MATTING (B/M), 3.36: INSTALL AS SHOWN ON PLAN TO RESIST EROSION AND PROMOTE THE ESTABLISHMENT OF YOUNG VEGETATION ON STEEP SLOPES AND IN CHANNELIZED AREAS.
7. DUST CONTROL (DC), 3.39: PROVIDE DUST CONTROL AS SHOWN ON PLANS TO HELP REDUCE THE PRESENCE OF AIRBORNE SUBSTANCES DURING LAND DISTURBING ACTIVITIES.

B. VEGETATIVE PRACTICES

1. TEMPORARY SEEDING (TS), 3.31: TEMPORARY SEEDING SHALL BE PROVIDED ON SITE TO PROVIDE STABILIZATION FOR ALL DISTURBED AREAS THAT WILL NOT BE BROUGHT TO FINAL GRADE FOR A PERIOD OF MORE THAN 14 DAYS.
2. PERMANENT SEEDING (PS), 3.32: PERMANENT SEEDING SHALL BE PROVIDED ON SITE TO PROVIDE STABILIZATION FOR ALL DISTURBED AREAS FOR FINAL STABILIZATION OR DISTURBED AREAS THAT WILL NOT BE BROUGHT TO FINAL GRADE FOR A PERIOD OF MORE THAN ONE YEAR.
3. MULCHING (MU), 3.35: PROVIDE MULCH WHERE INDICATED ON THE PLANS TO STABILIZE SEEDED AREAS AND PROMOTE THE ESTABLISHMENT OF VEGETATION.

C. MINIMUM STANDARDS

MS-1. STABILIZATION OF DENUDED AREAS:
PERMANENT OR TEMPORARY SOIL STABILIZATION SHALL BE APPLIED TO DENUDED AREAS WITHIN 7 DAYS AFTER FINAL GRADE IS REACHED ON ANY PORTION OF THE SITE. TEMPORARY SOIL STABILIZATION SHALL BE APPLIED WITHIN 7 DAYS TO DENUDED AREAS THAT MAY NOT BE AT FINAL GRADE, BUT WILL REMAIN DORMANT OR UNDISTURBED FOR LONGER THAN 14 DAYS. PERMANENT STABILIZATION SHALL BE APPLIED TO AREAS THAT ARE TO BE LEFT DORMANT FOR MORE THAN ONE YEAR.

MS-2. STABILIZATION OF SOIL STOCKPILES:
DURING CONSTRUCTION OF THE PROJECT, SOIL STOCKPILES AND BORROW AREAS SHALL BE STABILIZED OR PROTECTED WITH SEDIMENT TRAPPING MEASURES. THE APPLICANT IS RESPONSIBLE FOR TEMPORARY PROTECTION AND PERMANENT STABILIZATION OF ALL STOCKPILES ON SITE AS WELL AS BORROW AREAS AND SOIL INTENTIONALLY TRANSPORTED FROM THE PROJECT SITE.

MS-3. PERMANENT VEGETATIVE COVER:
A PERMANENT VEGETATIVE COVER SHALL BE ESTABLISHED ON DENUDED AREAS NOT OTHERWISE PERMANENTLY STABILIZED. PERMANENT VEGETATION SHALL NOT BE CONSIDERED ESTABLISHED UNTIL A GROUND COVER IS ACHIEVED THAT, IN THE OPINION OF THE E&S INSPECTOR, IS UNIFORM AND MATURE ENOUGH TO SURVIVE AND INHIBIT EROSION.

MS-4. TIMING AND STABILIZATION OF SILT TRAPPING MEASURES:
SEDIMENT BASINS AND TRAPS, STORM INLET PROTECTION, SILT FENCING, AND OTHER MEASURES INTENDED TO TRAP SEDIMENT SHALL BE CONSTRUCTED AS A FIRST STEP IN ANY LAND DISTURBING ACTIVITY AND SHALL BE MADE FUNCTIONAL BEFORE UPSLOPE LAND DISTURBANCE TAKES PLACE.

MS-5. STABILIZATION OF EARTHEN STRUCTURES:
STABILIZATION MEASURES SHALL BE APPLIED TO EARTHEN STRUCTURES SUCH AS DAMS, DIKES AND DIVERSIONS IMMEDIATELY AFTER INSTALLATION.

MS-6. SEDIMENT BASINS AND TRAPS:
SEDIMENT TRAPS & BASINS SHALL BE CONSTRUCTED BASED UPON THE TOTAL DRAINAGE AREA TO BE SERVED.
A. THE MINIMUM CAPACITY OF A SEDIMENT TRAP SHALL BE 134-CUBIC YARDS PER ACRE OF DRAINAGE AREA, AND SHALL CONTROL A DRAINAGE AREA OF LESS THAN 3-ACRES.
B. THE MINIMUM CAPACITY OF A SEDIMENT BASIN SHALL BE 134-CUBIC YARDS PER ACRE OF DRAINAGE AREA, AND SHALL CONTROL A DRAINAGE AREA OF 3-ACRES OR GREATER.

MS-7. CUT AND FILL SLOPES:
CUT AND FILL SLOPES SHALL BE CONSTRUCTED IN A MANNER THAT WILL MINIMIZE EROSION. SLOPES THAT ARE FOUND TO BE ERODING EXCESSIVELY WITHIN ONE YEAR OF PERMANENT STABILIZATION SHALL BE PROVIDED WITH ADDITIONAL SLOPE STABILIZING MEASURES UNTIL THE PROBLEM IS CORRECTED.

MS-8. CONCENTRATED RUNOFF DOWN CUT OR FILL SLOPES:
CONCENTRATED RUNOFF SHALL NOT FLOW DOWN CUT OR FILL SLOPES UNLESS CONTAINED WITHIN AN ADEQUATE TEMPORARY OR PERMANENT CHANNEL, FLUME OR SLOPE DRAIN STRUCTURE.

MS-9. WATER SEEPAGE FROM A SLOPE FACE:
WHENEVER WATER SEEPS FROM A SLOPE FACE, ADEQUATE DRAINAGE OR OTHER PROTECTION SHALL BE PROVIDED.

MS-10. STORM SEWER INLET PROTECTION:
ALL STORM SEWER INLETS THAT ARE MADE OPERABLE DURING CONSTRUCTION SHALL BE PROTECTED SO THAT SEDIMENT-LADEN WATER CANNOT ENTER THE CONVEYANCE SYSTEM WITHOUT FIRST BEING FILTERED OR OTHERWISE TREATED TO REMOVE SEDIMENT.

MS-11. STABILIZATION OF OUTLETS:
BEFORE NEWLY CONSTRUCTED STORM WATER CONVEYANCE CHANNELS OR PIPES ARE MADE OPERATIONAL, ADEQUATE OUTLET PROTECTION AND ANY REQUIRED TEMPORARY OR PERMANENT CHANNEL LINING SHALL BE INSTALLED IN BOTH THE CONVEYANCE CHANNEL AND RECEIVING CHANNEL.

MS-12. WORK IN LIVE WATERCOURSES:
WHEN WORK IN A LIVE WATERCOURSE IS PERFORMED, PRECAUTIONS SHALL BE TAKEN TO MINIMIZE ENCROACHMENT, CONTROL SEDIMENT TRANSPORT AND STABILIZE THE WORK AREA TO THE GREATEST EXTENT POSSIBLE DURING CONSTRUCTION. NONERODIBLE MATERIAL SHALL BE USED FOR THE CONSTRUCTION OF CAUSEWAYS AND COFFERDAMS. EARTHEN FILL MAY BE USED FOR THESE STRUCTURES IF ARMORED BY NONERODIBLE COVER MATERIALS.

MS-13. CROSSING A LIVE WATERCOURSE:
WHEN A LIVE WATERCOURSE MUST BE CROSSED BY CONSTRUCTION VEHICLES MORE THAN TWICE IN ANY SIX MONTH PERIOD, A TEMPORARY VEHICULAR STREAM CROSSING CONSTRUCTED OF NONERODIBLE MATERIALS SHALL BE PROVIDED.

MS-14. APPLICABLE REGULATIONS:
ALL APPLICABLE FEDERAL, STATE AND LOCAL REGULATIONS PERTAINING TO WORKING IN OR CROSSING LIVE WATERCOURSES SHALL BE MET.

MS-15. STABILIZATION OF BED AND BANKS:
THE BED AND BANKS OF A WATERCOURSE SHALL BE STABILIZED IMMEDIATELY AFTER WORK IN THE WATERCOURSE IS COMPLETED.

MS-16. UNDERGROUND UTILITIES:
UNDERGROUND UTILITY LINES SHALL BE INSTALLED IN ACCORDANCE WITH THE FOLLOWING STANDARDS, IN ADDITION TO OTHER APPLICABLE CRITERIA:
A. NO MORE THAN 500-LINEAR FEET OF TRENCH MAY BE OPENED AT ONE TIME.
B. WHERE CONSISTENT WITH SAFETY AND SPACE CONSIDERATIONS, EXCAVATED MATERIAL IS TO BE PLACED ON THE UPHILL SIDE OF TRENCHES, EXCEPT FOR ANY DIVERSION DITCHES.
C. EFFLUENT FROM DEWATERING OPERATIONS SHALL BE FILTERED OR PASSED THROUGH AN APPROVED SEDIMENT TRAPPING DEVICE, OR BOTH, AND DISCHARGED IN A MANNER THAT DOES NOT ADVERSELY AFFECT FLOWING STREAMS OR OFFSITE PROPERTY.
D. TRENCH BACKFILL MATERIAL SHALL BE PROPERLY COMPACTED IN ORDER TO MINIMIZE EROSION AND PROMOTE STABILIZATION.
E. RESTABILIZATION SHALL BE ACCOMPLISHED IN ACCORDANCE WITH THESE REGULATIONS.
F. ALL APPLICABLE SAFETY REGULATIONS SHALL BE COMPLIED WITH AT ALL TIMES.

MS-17. CONSTRUCTION ACCESS ROUTES:
WHERE CONSTRUCTION VEHICLE ACCESS ROUTES INTERSECT PAVED OR PUBLIC ROADS, PROVISIONS SHALL BE MADE TO MINIMIZE THE TRANSPORT OF SEDIMENT BY VEHICULAR TRACKING ONTO THE PAVED SURFACE. WHERE SEDIMENT IS TRANSPORTED ONTO A PAVED OR PUBLIC ROAD, THE ROAD SURFACE SHALL BE CLEANED THOROUGHLY AT THE END OF EACH DAY. SEDIMENT SHALL BE REMOVED BY SHOVELING OR SWEEPING AND TRANSPORTED TO A SEDIMENT DISPOSAL AREA. STREET WASHING SHALL BE ALLOWED ONLY AFTER SEDIMENT IS REMOVED IN THIS MANNER. THIS PROVISION SHALL APPLY TO INDIVIDUAL DEVELOPMENT LOTS AND LARGER LAND-DISTURBING ACTIVITIES.

MS-18. TEMPORARY E&S CONTROL MEASURE REMOVAL:
ALL TEMPORARY EROSION AND SEDIMENT CONTROL MEASURES SHALL BE REMOVED WITHIN 30 DAYS AFTER FINAL SITE STABILIZATION OR AFTER TEMPORARY MEASURES ARE NO LONGER NEEDED, UNLESS OTHERWISE AUTHORIZED BY THE LOCAL E&S AUTHORITY. TRAPPED SEDIMENT AND THE DISTURBED SOIL AREAS RESULTING FROM THE DISPOSITION OF TEMPORARY MEASURES SHALL BE PERMANENTLY STABILIZED TO PREVENT FURTHER EROSION AND SEDIMENTATION.

MS-19:
PROPERTIES AND WATERWAYS DOWNSTREAM FROM DEVELOPMENT SITES SHALL BE PROTECTED FROM SEDIMENT DEPOSITION, EROSION AND DAMAGE DUE TO INCREASES IN VOLUME, VELOCITY AND PEAK FLOW RATE OF STORMWATER RUNOFF FOR THE STATED FREQUENCY STORM OF 24-HOUR DURATION IN ACCORDANCE WITH THE FOLLOWING STANDARDS AND CRITERIA. STREAM RESTORATION AND RELOCATION PROJECTS THAT INCORPORATE NATURAL CHANNEL DESIGN CONCEPTS ARE NOT MAN-MADE CHANNELS AND SHALL BE EXEMPT FROM ANY FLOW RATE CAPACITY AND VELOCITY REQUIREMENTS FOR NATURAL OR MAN-MADE CHANNELS:
A. CONCENTRATED STORMWATER RUNOFF LEAVING A DEVELOPMENT SITE SHALL BE DISCHARGED DIRECTLY INTO AN ADEQUATE NATURAL OR MAN-MADE RECEIVING CHANNEL, PIPE OR STORM SEWER SYSTEM. FOR THOSE SITES WHERE RUNOFF IS DISCHARGED INTO A PIPE OR PIPE SYSTEM, DOWNSTREAM STABILITY ANALYSES AT THE OUTFALL OF THE PIPE OR PIPE SYSTEM SHALL BE PERFORMED.
B. ADEQUACY OF ALL CHANNELS AND PIPES SHALL BE VERIFIED IN THE FOLLOWING MANNER:
 (1) THE APPLICANT SHALL DEMONSTRATE THAT THE TOTAL DRAINAGE AREA TO THE POINT OF ANALYSIS WITHIN THE CHANNEL IS ONE HUNDRED TIMES GREATER THAN THE CONTRIBUTING DRAINAGE AREA OF THE PROJECT IN QUESTION; OR
 (2) (A) NATURAL CHANNELS SHALL BE ANALYZED BY THE USE OF A TWO-YEAR STORM TO VERIFY THAT STORMWATER WILL NOT OVERTOP CHANNEL BANKS NOR CAUSE EROSION OF CHANNEL BED OR BANKS.
 (B) ALL PREVIOUSLY CONSTRUCTED MAN-MADE CHANNELS SHALL BE ANALYZED BY THE USE OF A TEN-YEAR STORM TO VERIFY THAT STORMWATER WILL NOT OVERTOP ITS BANKS AND BY THE USE OF A TWO-YEAR STORM TO DEMONSTRATE THAT STORMWATER WILL NOT CAUSE EROSION OF CHANNEL BED OR BANKS; AND
 (C) PIPES AND STORM SEWER SYSTEMS SHALL BE ANALYZED BY THE USE OF A TEN-YEAR STORM TO VERIFY THAT STORMWATER WILL BE CONTAINED WITHIN THE PIPE OR SYSTEM.
C. IF EXISTING NATURAL RECEIVING CHANNELS OR PREVIOUSLY CONSTRUCTED MAN-MADE CHANNELS OR PIPES ARE NOT ADEQUATE, THE APPLICANT SHALL:
 (1) IMPROVE THE CHANNELS TO A CONDITION WHERE A TEN-YEAR STORM WILL NOT OVERTOP THE BANKS AND A TWO-YEAR STORM WILL NOT CAUSE EROSION TO THE CHANNEL, THE BED, OR THE BANKS; OR
 (2) IMPROVE THE PIPE OR PIPE SYSTEM TO A CONDITION WHERE THE TEN-YEAR STORM IS CONTAINED WITHIN THE APPURTENANCES;
 (3) DEVELOP A SITE DESIGN THAT WILL NOT CAUSE THE PRE-DEVELOPMENT PEAK RUNOFF RATE FROM A TWO-YEAR STORM TO INCREASE WHEN RUNOFF OUTFALLS INTO A NATURAL CHANNEL OR WILL NOT CAUSE THE PRE-DEVELOPMENT PEAK RUNOFF RATE FROM A TEN-YEAR STORM TO INCREASE WHEN RUNOFF OUTFALLS INTO A MAN-MADE CHANNEL; OR
 (4) PROVIDE A COMBINATION OF CHANNEL IMPROVEMENT, STORMWATER DETENTION OR OTHER MEASURES WHICH IS SATISFACTORY TO THE VESCP AUTHORITY TO PREVENT DOWNSTREAM EROSION.
D. THE APPLICANT SHALL PROVIDE EVIDENCE OF PERMISSION TO MAKE THE IMPROVEMENTS.
E. ALL HYDROLOGIC ANALYSES SHALL BE BASED ON THE EXISTING WATERSHED CHARACTERISTICS AND THE ULTIMATE DEVELOPMENT CONDITION OF THE SUBJECT PROJECT.
F. IF THE APPLICANT CHOOSES AN OPTION THAT INCLUDES STORMWATER DETENTION, HE SHALL OBTAIN APPROVAL FROM THE VESCP OF A PLAN FOR MAINTENANCE OF THE DETENTION FACILITIES. THE PLAN SHALL SET FORTH THE MAINTENANCE REQUIREMENTS OF THE FACILITY AND THE PERSON RESPONSIBLE FOR PERFORMING THE MAINTENANCE.
G. OUTFALL FROM A DETENTION FACILITY SHALL BE DISCHARGED TO A RECEIVING CHANNEL, AND ENERGY DISSIPATORS SHALL BE PLACED AT THE OUTFALL OF ALL DETENTION FACILITIES AS NECESSARY TO PROVIDE A STABILIZED TRANSITION FROM THE FACILITY TO THE RECEIVING CHANNEL.
H. ALL ON-SITE CHANNELS MUST BE VERIFIED TO BE ADEQUATE.
I. INCREASED VOLUMES OF SHEET FLOWS THAT MAY CAUSE EROSION OR SEDIMENTATION ON ADJACENT PROPERTY SHALL BE DIVERTED TO A STABLE OUTLET, ADEQUATE CHANNEL, PIPE OR PIPE SYSTEM, OR TO A DETENTION FACILITY.
J. IN APPLYING THESE STORMWATER MANAGEMENT CRITERIA, INDIVIDUAL LOTS OR PARCELS IN A RESIDENTIAL, COMMERCIAL OR INDUSTRIAL DEVELOPMENT SHALL NOT BE CONSIDERED TO BE SEPARATE DEVELOPMENT PROJECTS. INSTEAD, THE DEVELOPMENT, AS A WHOLE, SHALL BE CONSIDERED TO BE A SINGLE DEVELOPMENT PROJECT. HYDROLOGIC PARAMETERS THAT REFLECT THE ULTIMATE DEVELOPMENT CONDITION SHALL BE USED IN ALL ENGINEERING CALCULATIONS.
K. ALL MEASURES USED TO PROTECT PROPERTIES AND WATERWAYS SHALL BE EMPLOYED IN A MANNER WHICH MINIMIZES IMPACTS ON THE PHYSICAL, CHEMICAL AND BIOLOGICAL INTEGRITY OF RIVERS, STREAMS AND OTHER WATERS OF THE STATE.
L. ANY PLAN APPROVED PRIOR TO JULY 1, 2014, THAT PROVIDES FOR STORMWATER MANAGEMENT THAT ADDRESSES FLOW RATE CAPACITY AND VELOCITY REQUIREMENTS FOR NATURAL OR MAN-MADE CHANNELS SHALL SATISFY THE FLOW RATE CAPACITY AND VELOCITY REQUIREMENTS FOR NATURAL OR MAN-MADE CHANNELS IF THE PRACTICES ARE DESIGNED TO (I) DETAIN WATER QUALITY VOLUME AND RELEASE IT OVER 48 HOURS; (II) DETAIN AND RELEASE OVER A 24-HOUR PERIOD THE EXPECTED RAINFALL RESULTING FROM THE ONE YEAR, 24-HOUR STORM; AND (III) REDUCE THE ALLOWABLE PEAK FLOW RATE RESULTING FROM THE 1.5, 2, AND 10-YEAR, 24-HOUR STORMS TO A LEVEL THAT IS LESS THAN OR EQUAL TO THE PEAK FLOW RATE FROM THE SITE, ASSUMING A GOOD FORESTED CONDITION ACHIEVED THROUGH MULTIPLICATION OF THE FORESTED PEAK FLOW RATE BY A REDUCTION FACTOR EQUAL TO THE RUNOFF VOLUME FROM THE SITE WHEN IT WAS IN A GOOD FORESTED CONDITION DIVIDED BY THE RUNOFF VOLUME FROM THE SITE IN ITS PROPOSED CONDITION, AND SHALL BE EXEMPT FROM ANY FLOW RATE CAPACITY AND VELOCITY REQUIREMENTS FOR NATURAL OR MAN-MADE CHANNELS AS DEFINED IN ANY REGULATIONS PROMULGATED PURSUANT TO § 62.1-44.15:54 OR 62.1-44.15:65 OF THE ACT.
M. FOR PLANS APPROVED ON AND AFTER JULY 1, 2014, THE FLOW RATE CAPACITY AND VELOCITY REQUIREMENTS OF § 62.1-44.15:52 A OF THE ACT AND THIS SUBSECTION SHALL BE SATISFIED BY COMPLIANCE WITH WATER QUANTITY REQUIREMENTS IN THE STORMWATER MANAGEMENT ACT (§ 62.1-44.15:24 ET SEQ. OF THE CODE OF VIRGINIA) AND ATTENDANT REGULATIONS, UNLESS SUCH LAND-DISTURBING ACTIVITIES ARE IN ACCORDANCE WITH 9VAC25-870-48 OF THE VIRGINIA STORMWATER MANAGEMENT PROGRAM (VSMP) REGULATIONS.
N. COMPLIANCE WITH THE WATER QUANTITY MINIMUM STANDARDS SET OUT IN 9VAC25-870-66 OF THE VIRGINIA STORMWATER MANAGEMENT PROGRAM (VSMP) REGULATIONS SHALL BE DEEMED TO SATISFY THE REQUIREMENTS OF SUBDIVISION 19 OF THIS SUBSECTION.

D. MAINTENANCE:

1. ALL EROSION AND SEDIMENT CONTROL STRUCTURES AND SYSTEMS SHALL BE MAINTAINED, INSPECTED, AND REPAIRED AS NEEDED TO ENSURE CONTINUED PERFORMANCE OF THEIR INTENDED FUNCTION.
2. ALL EROSION AND SEDIMENT CONTROL MEASURES SHALL BE CHECKED AT THE END OF EACH DAY AND AFTER EVERY RAINFALL EVENT.
3. DAMAGE TO EROSION CONTROL MEASURES CAUSED BY CONSTRUCTION TRAFFIC OR OTHER ACTIVITY SHALL BE REPAIRED BEFORE THE END OF EACH WORKING DAY.
4. MAINTAIN ALL SEEDED AREAS UNTIL A UNIFORM STAND IS ACCEPTED.
5. CONSTRUCTION ENTRANCE (3.02): PROVIDE FOR EQUIPMENT WASHING AS NEEDED TO PREVENT THE TRANSPORT OF SOIL ONTO EXISTING ASPHALT ROADWAYS. ADD STONE TO ENTRANCE AS REQUIRED. ANY SEDIMENT ON THE PAVEMENT SHALL BE REMOVED IMMEDIATELY.
6. SILT FENCE (3.05): SILT FENCE BARRIERS WILL BE CHECKED DAILY FOR UNDERMINING OR DETERIORATION OF THE FABRIC. SEDIMENT SHALL BE REMOVED WHEN THE LEVEL REACHES HALF WAY TO THE TOP OF THE BARRIER.
7. STORM DRAIN INLET PROTECTION (3.07): SEDIMENT SHALL BE REMOVED AND MEASURE RESTORED TO ORIGINAL DIMENSIONS WHEN SEDIMENT HAS ACCUMULATED TO HALF OF DESIGN DEPTH. REMOVED SEDIMENT SHALL BE DEPOSITED IN A SUITABLE AREA AND IN SUCH A MANNER THAT IT WILL NOT ERODE AND CAUSE SEDIMENTATION PROBLEMS.
8. STORMWATER CONVEYANCE CHANNELS (3.17): SHALL BE CHECKED PERIODICALLY TO ENSURE THAT SCOUR IS NOT OCCURRING. SEDIMENT DEPOSITED IN THE CHANNELS SHALL BE REMOVED PRIOR TO THE REMOVAL OF THE TEMPORARY EROSION AND SEDIMENT CONTROL MEASURES, AND DURING CONSTRUCTION WHEN THE CAPACITY OF THE CHANNELS IS REDUCED.
9. OUTLET PROTECTION (3.18): INSPECT AFTER RAINFALL EVENTS TO CHECK FOR SCOUR. MAKE REPAIRS AS NECESSARY.
10. SEEDING (3.31/ 3.32) AREAS WHICH FAIL TO ESTABLISH VEGETATIVE COVER ADEQUATE TO PREVENT RILL EROSION WILL BE RESEEDED AS SOON AS SUCH AREAS ARE IDENTIFIED.
11. SOIL STABILIZATION BLANKETS AND MATTING (3.36): BE INSPECTED AFTER RAINSTORMS TO CHECK FOR EROSION AND UNDERMINING. IF WASHOUT OR BREAKAGE OCCURS, REINSTALL THE MATERIAL AFTER REPAIRING DAMAGE TO THE SLOPE OR DITCH.
12. DUST CONTROL (3.39): PROVIDE DUST CONTROL IN AREAS SUBJECT TO SURFACE AND AIR MOVEMENT OF DUST WHERE ON-SITE AND OFF-SITE DAMAGE IS LIKELY TO OCCUR IF PREVENTIVE MEASURES ARE NOT TAKEN.

X. SEQUENCE OF CONSTRUCTION

1. CONTRACTOR SHALL OBTAIN LAND DISTURBANCE PERMIT PRIOR TO CONSTRUCTION AND SCHEDULE AND ATTEND PRE-CONSTRUCTION CONFERENCE.
2. RECEIVE APPROVAL FROM COUNTY EROSION AND SEDIMENT CONTROL INSPECTOR TO COMMENCE GRADING ACTIVITIES.
3. DELINEATE LIMITS OF CLEARING.
4. INSTALL CONSTRUCTION ENTRANCE WHERE SHOWN ON THE DRAWINGS.
5. INSTALL SILT FENCE PERIMETER CONTROL FOR SITE TO PROTECT OFFSITE AREAS FROM SEDIMENT LADEN RUN-OFF.
6. PERFORM ALL GRADING AND SITEWORK AND INSTALL PIPES AND OTHER UTILITIES. STOCKPILE EXCESS SOIL WHERE SHOWN ON PLAN OR IN AREA APPROVED BY THE EROSION AND SEDIMENT CONTROL INSPECTOR.
7. INSTALL INLET PROTECTION FOR EXISTING STORM DRAIN INLETS.
8. ONCE FINAL GRADES HAVE BEEN REACHED STABILIZE GRASS AREAS WITH TEMPORARY SEEDING, PERMANENT SEEDING, AND MULCH. GRASS AREAS WITH A SLOPE OF 2H:1V OR STEEPER SHALL RECEIVE VDOT STANDARD EC-2 SOIL STABILIZATION BLANKETS AND MATTING UNLESS OTHERWISE NOTED.
9. ALL SILT FENCE SHALL REMAIN IN PLACE POST-CONSTRUCTION.
10. EROSION AND SEDIMENT CONTROL MEASURES SHALL BE REMOVED ONCE APPROVAL TO DO SO HAS BEEN PROVIDED BY THE EROSION AND SEDIMENT CONTROL INSPECTOR.

XI. GENERAL EROSION AND SEDIMENT CONTROL NOTES

6. THE PLAN APPROVING AUTHORITY MUST BE NOTIFIED ONE WEEK PRIOR TO THE PRE-CONSTRUCTION CONFERENCE, ONE WEEK PRIOR TO THE COMMENCEMENT OF LAND DISTURBING ACTIVITY, AND ONE WEEK PRIOR TO THE FINAL INSPECTION.
7. ALL EROSION AND SEDIMENT CONTROL MEASURES WILL BE CONSTRUCTED AND MAINTAINED ACCORDING TO MINIMUM STANDARDS AND SPECIFICATION OF THE VIRGINIA EROSION AND SEDIMENT CONTROL HANDBOOK AND VIRGINIA REGULATIONS VR 625-02-00 EROSION AND CONTROL SEDIMENT REGULATIONS.
8. ALL EROSION AND SEDIMENT CONTROL MEASURES ARE TO BE PLACED PRIOR TO OR AS THE FIRST STEP IN CLEARING.
9. A COPY OF THE APPROVED EROSION AND SEDIMENT CONTROL PLAN SHALL BE MAINTAINED ON THE SITE AT ALL TIMES.
10. PRIOR TO COMMENCING LAND DISTURBING ACTIVITIES IN AREAS OTHER THAN INDICATED ON THESE PLANS (INCLUDING, BUT NOT LIMITED TO, OFF-SITE BORROW OR WASTE AREAS), THE CONTRACTOR SHALL SUBMIT A SUPPLEMENTARY EROSION CONTROL PLAN TO THE OWNER FOR REVIEW AND APPROVAL BY THE PLAN APPROVING AUTHORITY.
11. THE CONTRACTOR IS RESPONSIBLE FOR INSTALLATION OF ANY ADDITIONAL EROSION CONTROL MEASURES NECESSARY TO PREVENT EROSION AND SEDIMENTATION AS DETERMINED BY THE PLAN APPROVING AUTHORITY.
12. ALL DISTURBED AREAS ARE TO DRAIN TO APPROVED SEDIMENT CONTROL MEASURES AT ALL TIMES DURING LAND DISTURBING ACTIVITIES AND DURING SITE DEVELOPMENT UNTIL FINAL STABILIZATION IS ACHIEVED.
13. DURING DEWATERING OPERATIONS, WATER WILL BE PUMPED INTO AN APPROVED FILTERING DEVICE.
14. THE CONTRACTOR SHALL INSPECT ALL EROSION CONTROL MEASURES PERIODICALLY AND AFTER EACH RUNOFF-PRODUCING RAINFALL EVENT. ANY NECESSARY REPAIRS FOR CLEANUP TO MAINTAIN THE EFFECTIVENESS OF THE EROSION CONTROL DEVICES SHALL BE MADE IMMEDIATELY.
15. ALL FILL MATERIAL TO BE TAKEN FROM AN APPROVED, DESIGNATED BORROW AREA.
16. ALL WASTE MATERIALS SHALL BE TAKEN TO AN APPROVED WASTE AREA. EARTH FILL SHALL BE INERT MATERIALS ONLY, FREE OF ROOTS, STUMPS, WOOD, RUBBISH, AND OTHER DEBRIS.
17. BORROW OR WASTE AREAS ARE TO BE RECLAIMED WITHIN 7 DAYS OF COMPLETION.
18. BORROW, FILL OR WASTE ACTIVITY SHALL BE CONDUCTED IN A SAFE MANNER THAT MAINTAINS LATERAL SUPPORT, IN ORDER TO MINIMIZE ANY HAZARD TO PERSONS, PHYSICAL DAMAGE TO ADJACENT LAND AND IMPROVEMENTS, AND DAMAGE TO ANY PUBLIC STREET BECAUSE OF SLIDES, SINKING, OR COLLAPSE.
19. MAINTENANCE: ALL MEASURES ARE TO BE INSPECTED WEEKLY AND AFTER EACH RAINFALL. ANY DAMAGE OR CLOGGING TO STRUCTURAL MEASURES IS TO BE REPAIRED IMMEDIATELY. SILT TRAPS ARE TO BE CLEANED WHEN 50% OF THE WET STORAGE VOLUME IS FILLED WITH SEDIMENT. ALL SEEDED AREAS ARE TO BE RESEEDED WHEN NECESSARY TO ACHIEVE A GOOD STAND OF GRASS. SILT FENCE AND DIVERSION DYKES WHICH ARE COLLECTING SEDIMENT TO HALF THEIR HEIGHT MUST BE CLEANED AND REPAIRED IMMEDIATELY.
20. ALL TEMPORARY EROSION AND SEDIMENT CONTROL MEASURES ARE TO BE REMOVED WITHIN 30 DAYS OF FINAL SITE STABILIZATION, WHEN MEASURES ARE NO LONGER NEEDED, SUBJECT TO APPROVAL BY THE CULPEPER COUNTY EROSION CONTROL INSPECTOR.

XII. RESPONSIBLE LAND DISTURBER

1. THE RESPONSIBLE LAND DISTURBER (RLD) SHALL BE DETERMINED AT A LATER DATE WHEN A CONTRACTOR IS SELECTED FOR THE PROJECT.

NO.	SHEET REVISION	BY	DATE	NO.	SHEET REVISION	BY	DATE

COMMONWEALTH OF VIRGINIA
JASON A. CLARK
Lic. No. 33605
4/29/2022
PROFESSIONAL ENGINEER

WW ENGINEERS SURVEYORS PLANNERS
ASSOCIATES
PO Box 4119 Lynchburg, VA 24502 Phone: 434.316.6080
968 Olympia Drive, Suite 1 Charlottesville, VA 22911 Phone: 434.984.2700
www.wwassociates.net

DESIGNED BY: JAC	PROJECT: WASTEWATER TREATMENT PLANT IMPROVEMENTS TOWN OF CULPEPER, VIRGINIA		SET REV. NO. –
DRAWN BY: WAM			
DIHR BY: HFW	TITLE: EROSION & SEDIMENT CONTROL NARRATIVE		DRAWING NUMBER: C-6.3
WWA NUMBER: 221028.00	FILE NAME: 102800L_ENS-3.dwg	DISCIPLINE: CIVIL / SCALE: H: AS SHOWN V: N/A	DATE: 4/29/22

M:\221028 Town of Culpeper WWTP Improvements\221028.00 Design\102800L_ENS-3.dwg

1992 3.02

STONE CONSTRUCTION ENTRANCE

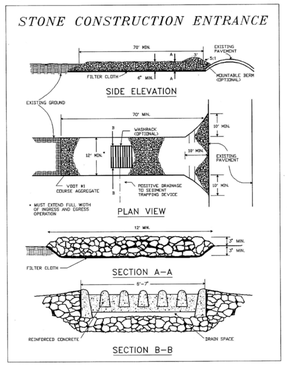

Source: Adapted from 1983 Maryland Standards for Soil Erosion and Sediment Control, and Va. DSWC

Plate 3.02-1

CE

1992 3.05

CONSTRUCTION OF A SILT FENCE (WITHOUT WIRE SUPPORT)

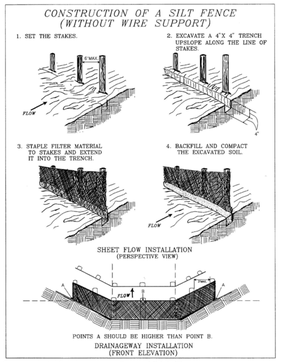

Source: Adapted from Installation of Straw and Fabric Filter Barriers for Sediment Control, Sherwood and Wyant

Plate 3.05-2

SF

1992 3.07

BLOCK AND GRAVEL DROP INLET SEDIMENT FILTER

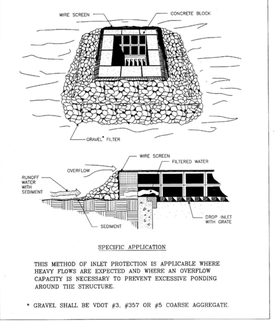

SPECIFIC APPLICATION

THIS METHOD OF INLET PROTECTION IS APPLICABLE WHERE HEAVY FLOWS ARE EXPECTED AND WHERE AN OVERFLOW CAPACITY IS NECESSARY TO PREVENT EXCESSIVE PONDING AROUND THE STRUCTURE.

* GRAVEL SHALL BE VDOT #3, #357 OR #5 COARSE AGGREGATE.

Source: Va. DSWC

Plate 3.07-3

IP

1992 3.36

TYPICAL TREATMENT – 1 (SOIL STABILIZATION BLANKET) INSTALLATION CRITERIA

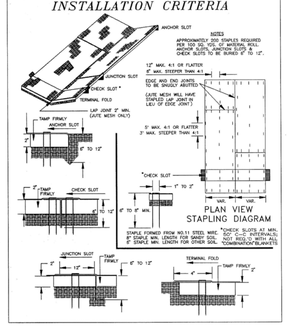

Source: VDOT Road and Bridge Standards

Plate 3.36-2

B/M

EC-2

1992 3.32

TABLE 3.32-D
SITE SPECIFIC SEEDING MIXTURES FOR PIEDMONT AREA

	Total Lbs. Per Acre
Minimum Care Lawn	
- Commercial or Residential	175-200 lbs.
- Kentucky 31 or Turf-Type Tall Fescue	95-100%
- Improved Perennial Ryegrass	0-5%
- Kentucky Bluegrass	0-5%
High-Maintenance Lawn	200-250 lbs.
- Kentucky 31 or Turf-Type Tall Fescue	100%
General Slope (3:1 or less)	
- Kentucky 31 Fescue	128 lbs.
- Red Top Grass	2 lbs.
- Seasonal Nurse Crop *	20 lbs.
	150 lbs.
Low-Maintenance Slope (Steeper than 3:1)	
- Kentucky 31 Fescue	108 lbs.
- Red Top Grass	2 lbs.
- Seasonal Nurse Crop *	20 lbs.
- Crownvetch **	20 lbs.
	150 lbs.

* Use seasonal nurse crop in accordance with seeding dates as stated below:
February 16th through April ..... Annual Rye
May 1st through August 15th ..... Foxtail Millet
August 16th through October ..... Annual Rye
November through February 15th ..... Winter Rye

** Substitute Sericea lespedeza for Crownvetch east of Farmville, Va. (May through September use hulled Sericea, all other periods, use unhulled Sericea). If Flatpea is used in lieu of Crownvetch, increase rate to 30 lbs./acre. All legume seed must be properly inoculated. Weeping Lovegrass may be added to any slope or low-maintenance mix during warmer seeding periods; add 10-20 lbs./acre in mixes.

PS

TABLE 3.31-B

ACCEPTABLE TEMPORARY SEEDING PLANT MATERIALS

"QUICK REFERENCE FOR ALL REGIONS"

Planting Dates	Species	Rate (lbs./acre)
Sept. 1 - Feb. 15	50/50 Mix of Annual Ryegrass (Lolium multi-florum) & Cereal (Winter) Rye (Secale cereale)	50 - 100
Feb. 16 - Apr. 30	Annual Ryegrass (Lolium multi-florum)	60 - 100
May 1 - Aug 31	German Millet (Setaria italica)	50

Source: Va. DSWC

TS

M:\221028 Town of Culpeper WWTP Improvements\221028.00 Design\102800L_ENS-4.dwg

NO.	SHEET REVISION	BY	DATE	NO.	SHEET REVISION	BY	DATE

COMMONWEALTH OF VIRGINIA
JASON A. CLARK
Lic. No. 33605
4/29/2022
PROFESSIONAL ENGINEER

WWA ASSOCIATES
ENGINEERS SURVEYORS PLANNERS
PO Box 4119, Lynchburg, VA 24502, Phone: 434.316.6080
968 Olympia Drive, Suite 1, Charlottesville, VA 22911, Phone: 434.984.2700
WWW.WWAASSOCIATES.NET

DESIGNED BY: JAC	PROJECT: WASTEWATER TREATMENT PLANT IMPROVEMENTS TOWN OF CULPEPER, VIRGINIA		SET REV. NO. –
DRAWN BY: WAM	TITLE: EROSION & SEDIMENT CONTROL DETAILS		DRAWING NUMBER: C-6.4
DIHR BY: HFW			
WWA NUMBER: 221028.00	FILE NAME: 102800L_ENS-4.dwg	DISCIPLINE: CIVIL	SCALE: H: AS SHOWN V: N/A	DATE: 4/29/22

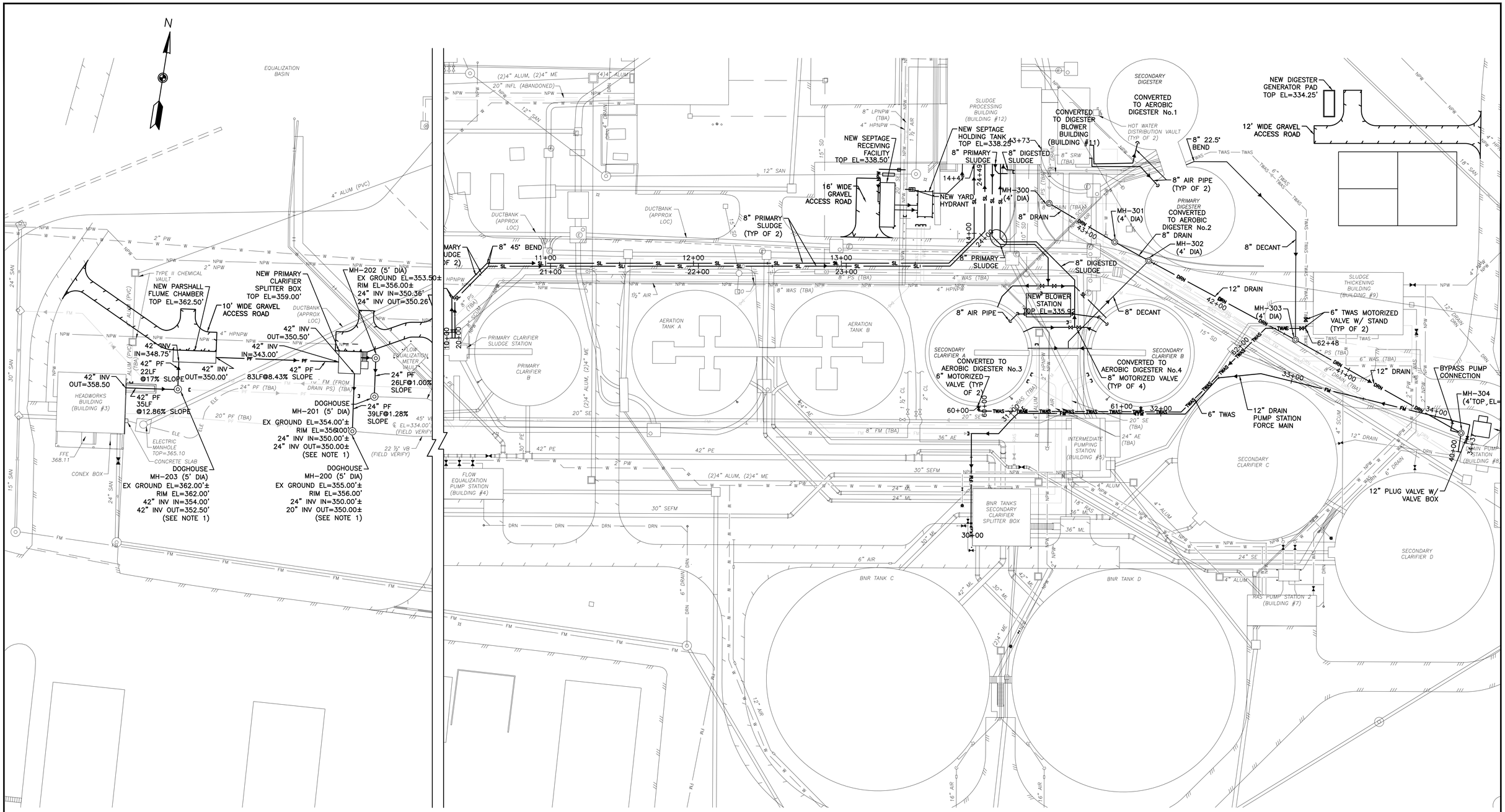

NOTE:

1. CONTRACTOR SHALL FIELD VERIFY DEPTH OF EXISTING 20" AND 24" PLANT FLOW PIPING AT MANHOLE LOCATIONS PRIOR TO CONSTRUCTION.

IF THIS DRAWING IS A REDUCTION GRAPHIC SCALE MUST BE USED

SCALE: 1" = 30'

30' 0 30'

WWTP SITE UTILITY PLAN-OVERALL

SCALE: 1"=30'

NO.	SHEET REVISION	BY	DATE	NO.	SHEET REVISION	BY	DATE

COMMONWEALTH OF VIRGINIA
JASON A. CLARK
Lic. No. 33605
4/29/2022
PROFESSIONAL ENGINEER

WW ASSOCIATES
ENGINEERS SURVEYORS PLANNERS
PO Box 4119, Lynchburg, VA 24502, Phone: 434.316.6080
968 Olympia Drive, Suite 1, Charlottesville, VA 22911, Phone: 434.984.2700
www.wwassociates.net

DESIGNED BY: JAC	PROJECT: WASTEWATER TREATMENT PLANT IMPROVEMENTS TOWN OF CULPEPER, VIRGINIA		SET REV. NO. —
DRAWN BY: DJC	TITLE: WWTP SITE UTILITY PLAN-OVERALL		DRAWING NUMBER: C-6.5
DIHR BY: HFW			
WWA NUMBER: 221028.00	FILE NAME: 102800L_PP-1.dwg	DISCIPLINE: CIVIL	SCALE: H: AS SHOWN V: N/A	DATE: 4/29/22

M:\221028 Town of Culpeper WWTP Improvements\221028.00 Design\102800L_PP-1.dwg

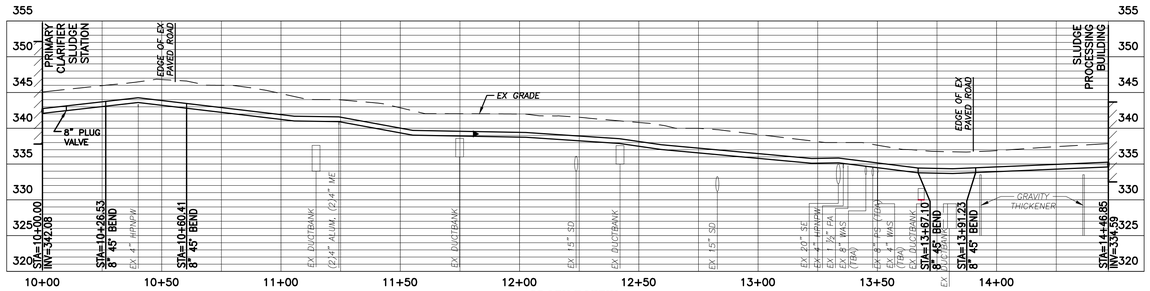

PROFILE VIEW:
8" PRIMARY SLUDGE-
PRIMARY CLARIFIER A-SLUDGE PROCESSING BUILDING

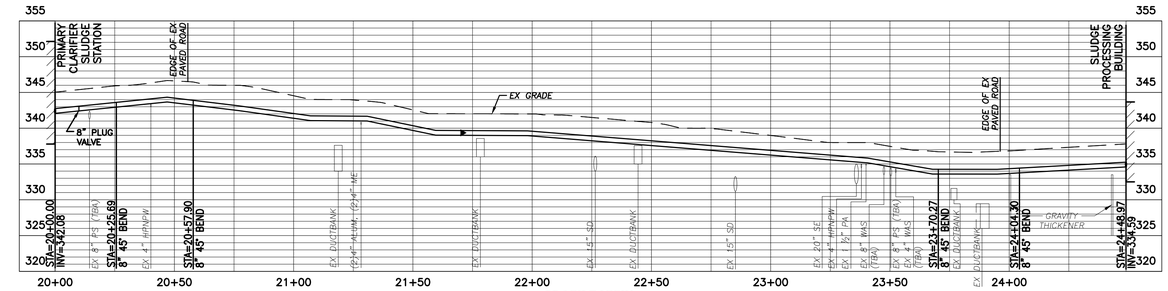

PROFILE VIEW:
8" PRIMARY SLUDGE-
PRIMARY CLARIFIER B-SLUDGE PROCESSING BUILDING

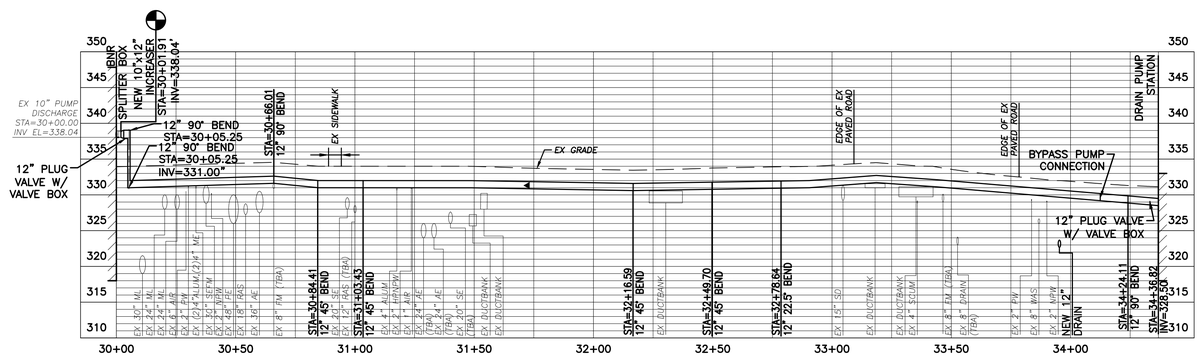

PROFILE VIEW:
12" FORCE MAIN-
DRAIN PUMP STATION- BNR TANKS/SECONDARY CLARIFIER SPLITTER BOX

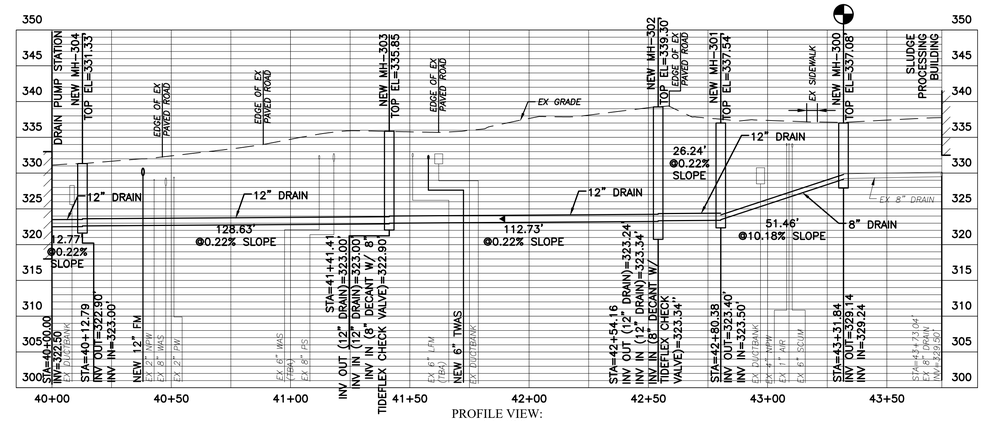

PROFILE VIEW:
DRAIN-
DRAIN PUMP STATION-SLUDGE PROCESSING BUILDING

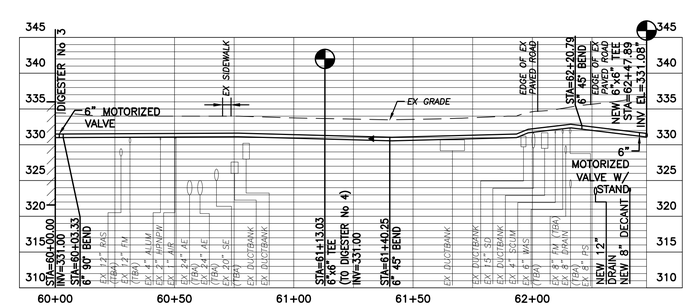

PROFILE VIEW:
6" TWAS-
SLUDGE THICKENING BUILDING-DIGESTERS 3&4

IF THIS DRAWING IS A REDUCTION GRAPHIC SCALE MUST BE USED

HORZ: 1" = 30'

30' 0 30'

10' 0 10'

VERT: 1" = 10'

NO.	SHEET REVISION	BY	DATE	NO.	SHEET REVISION	BY	DATE

COMMONWEALTH OF VIRGINIA
JASON A. CLARK
Lic. No. 33605
4/29/2022
PROFESSIONAL ENGINEER

WWA ASSOCIATES
ENGINEERS SURVEYORS PLANNERS
PO Box 4119 Lynchburg, VA 24502 Phone: 434.316.6080
968 Olympia Drive, Suite 1 Charlottesville, VA 22911 Phone: 434.984.2700
WWW.WWASSOCIATES.NET

DESIGNED BY: JAC	PROJECT: WASTEWATER TREATMENT PLANT IMPROVEMENTS TOWN OF CULPEPER, VIRGINIA		SET REV. NO. –
DRAWN BY: DJC	TITLE: UTILITY PROFILES		DRAWING NUMBER: C-6.6
DIHR BY: HFW			
WWA NUMBER: 221028.00	FILE NAME: 102800L_PP-2.dwg	DISCIPLINE: CIVIL	SCALE: H: AS SHOWN V: N/A	DATE: 4/29/22

M:\221028 Town of Culpeper WWTP Improvements\221028.00 Design\102800L_PP-2.dwg

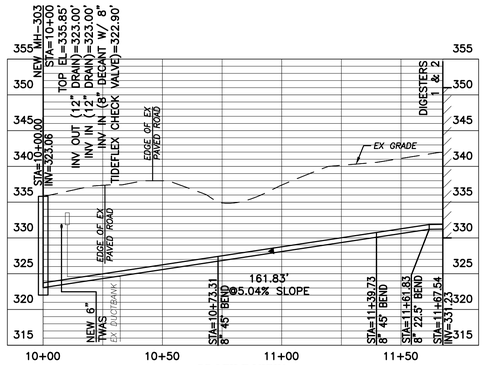

PROFILE VIEW:
8" DECANT-
MANHOLE-DIGESTERS 1 & 2

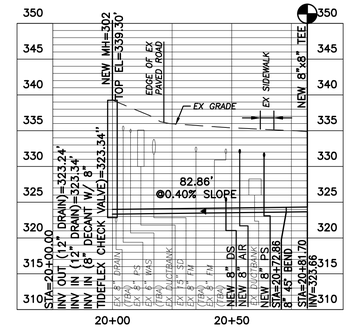

PROFILE VIEW:
8" DECANT-
MANHOLE-DIGESTERS 3 & 4

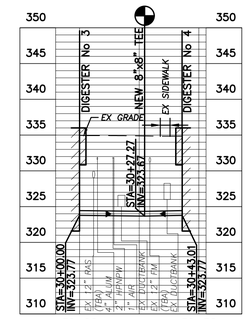

PROFILE VIEW:
8" DECANT-
DIGESTERS 3 & 4

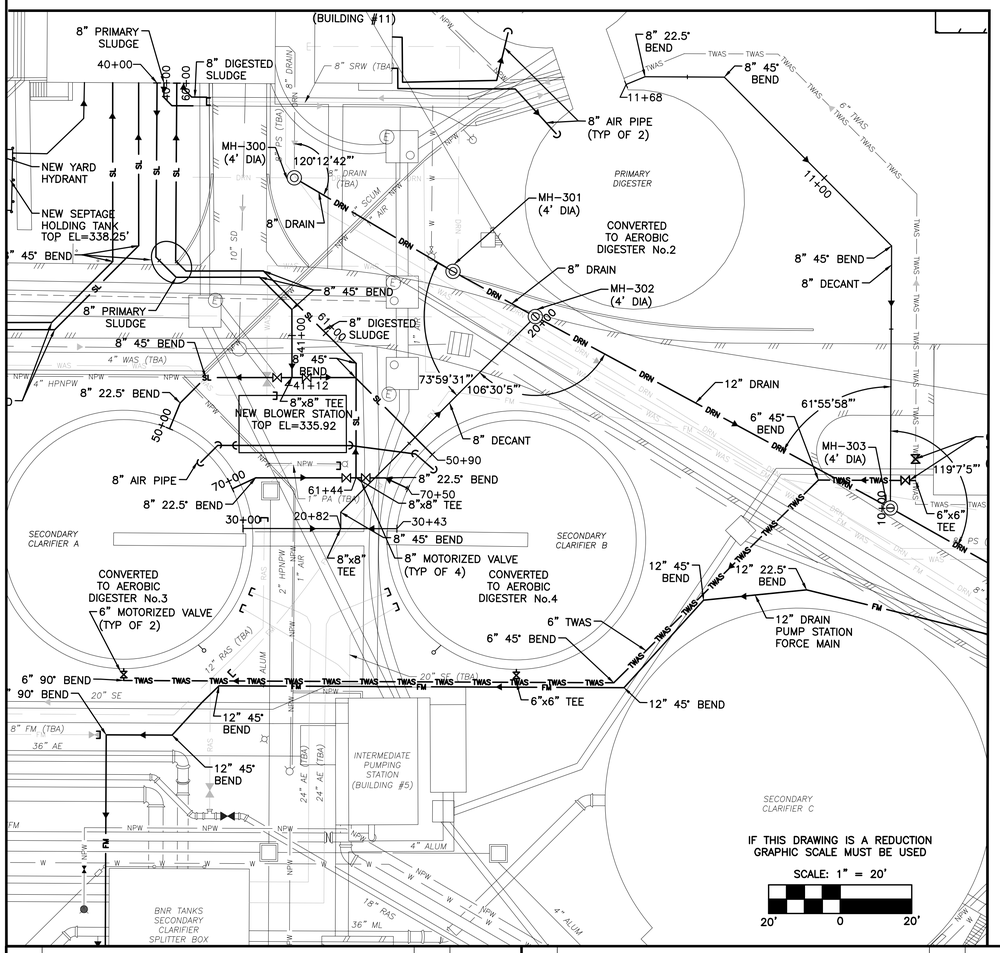

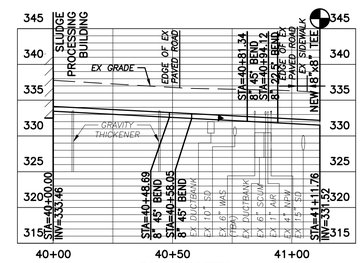

PROFILE VIEW:
8" PRIMARY SLUDGE
SLUDGE PROCESSING BULDING-DIGESTERS 3 & 4

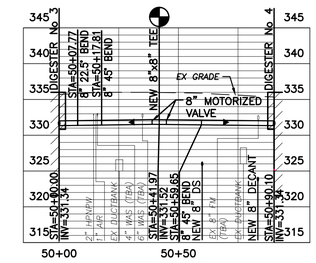

PROFILE VIEW:
8" PRIMARY SLUDGE
DIGESTERS 3 & 4

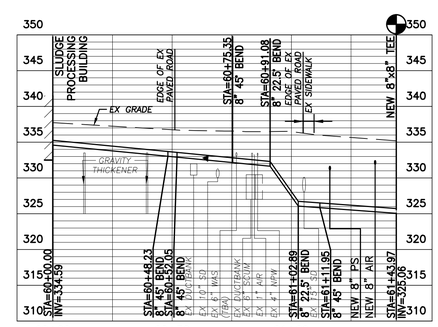

PROFILE VIEW:
8" DIGESTED SLUDGE
SLUDGE PROCESSING BULDING-DIGESTERS 3 & 4

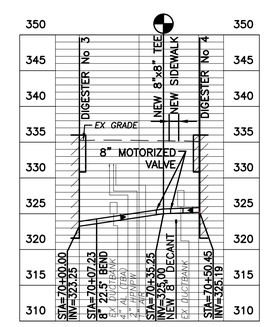

PROFILE VIEW:
8" DIGESTED SLUDGE
DIGESTERS 3 & 4

IF THIS DRAWING IS A REDUCTION GRAPHIC SCALE MUST BE USED

HORZ: 1" = 30'

30' 0 30'

10' 0 10'

VERT: 1" = 10'

M:\221028 Town of Culpeper WWTP Improvements\221028.00 Design\102800L_PP-3.dwg

NO.	SHEET REVISION	BY	DATE	NO.	SHEET REVISION	BY	DATE

COMMONWEALTH OF VIRGINIA
JASON A. CLARK
Lic. No. 33605
4/29/2022
PROFESSIONAL ENGINEER

WWA ENGINEERS SURVEYORS PLANNERS ASSOCIATES
PO Box 4119 Lynchburg, VA 24502 Phone: 434.316.6080
968 Olympia Drive, Suite 1 Charlottesville, VA 22911 Phone: 434.984.2700
www.wwassociates.net

DESIGNED BY: JAC	PROJECT: WASTEWATER TREATMENT PLANT IMPROVEMENTS TOWN OF CULPEPER, VIRGINIA		SET REV. NO. —
DRAWN BY: DJC	TITLE: UTILITY PROFILES		DRAWING NUMBER: C-6.7
DIHR BY: HFW			
WWA NUMBER: 221028.00	FILE NAME: 102800L_PP-3.dwg	DISCIPLINE: CIVIL	SCALE: H: AS SHOWN V: N/A	DATE: 4/29/22

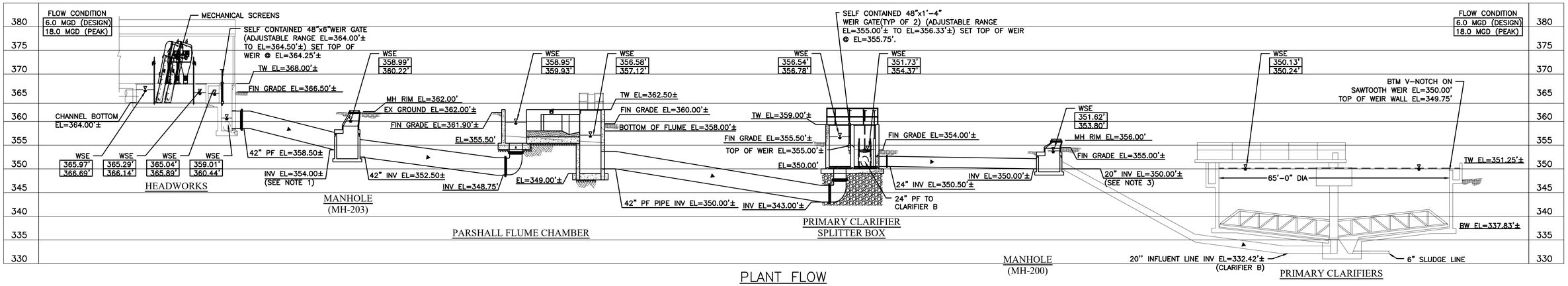

PLANT FLOW

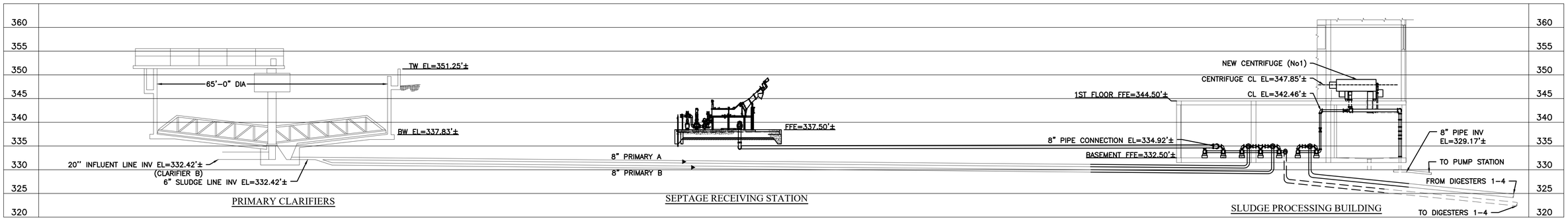

SLUDGE/SEPTAGE

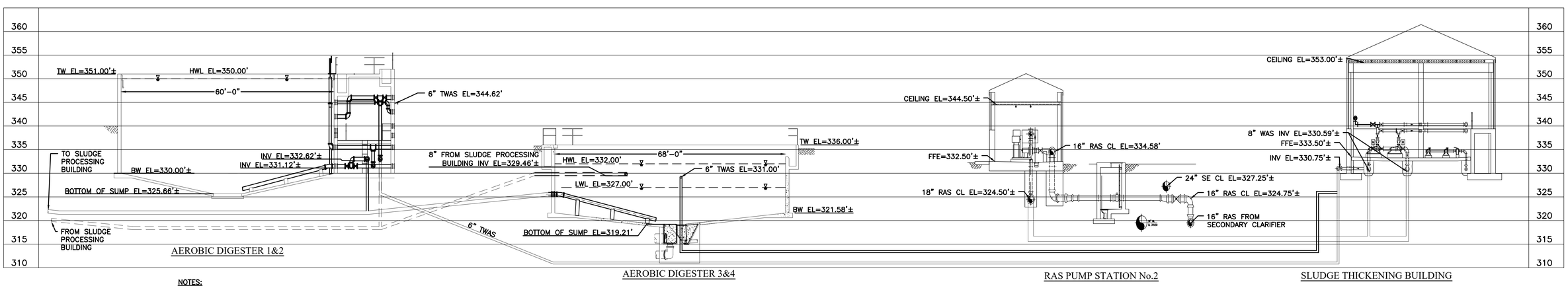

SLUDGE/SEPTAGE (CONTINUED)

NOTES:

1. PEAK FLOW (18.0 MGD) WATER SURFACE ELEVATIONS IN MECHANICAL SCREENS AND PRIMARY CLARIFIERS ARE BASED ON FLOW THROUGH 2 UNITS (9.0 MGD PER UNIT).
2. DESIGN FLOW (6.0 MGD) WATER SURFACE ELEVATIONS ARE BASED ON THE FLOW THROUGH A SINGLE UNIT.
3. CONTRACTOR SHALL FIELD VERIFY DEPTH OF EXISTING 20" AND 24" PLANT FLOW PIPING AT MANHOLE LOCATIONS PRIOR TO CONSTRUCTION.

BASIS OF DESIGN
DESIGN FLOW = 6.0 MGD
PEAK FLOW = 18.0 MGD

HYDRAULIC PROFILE
SCALE: 1" = 10' VERTICAL
NTS HORIZONTAL

IF THIS DRAWING IS A REDUCTION GRAPHIC SCALE MUST BE USED
VERTICAL SCALE: 1" = 10'
10' 0 10'

NO.	SHEET REVISION	BY	DATE	NO.	SHEET REVISION	BY	DATE

COMMONWEALTH OF VIRGINIA
JASON A. CLARK
Lic. No. 33605
4/29/2022
PROFESSIONAL ENGINEER

WW ENGINEERS SURVEYORS PLANNERS ASSOCIATES
PO Box 4119 Lynchburg, VA 24502 Phone: 434.316.6080
968 Olympia Drive, Suite 1 Charlottesville, VA 22911 Phone: 434.984.2700
www.wwassociates.net

DESIGNED BY: JAC	PROJECT: WASTEWATER TREATMENT PLANT IMPROVEMENTS TOWN OF CULPEPER, VIRGINIA		SET REV. NO. –
DRAWN BY: DJC/WAM	TITLE: PARTIAL HYDRAULIC PROFILE– HEADWORKS TO PRIMARY CLARIFIERS		DRAWING NUMBER: C-6.8
DIHR BY: HFW			
WWA NUMBER: 221028.00	FILE NAME: 102800L_HP1.dwg	DISCIPLINE: CIVIL	SCALE: H: N.T.S. V: 1"=10'
			DATE: 4/29/22

M:\221028 Town of Culpeper WWTP Improvements\221028.00 Design\102800L_HP1.dwg

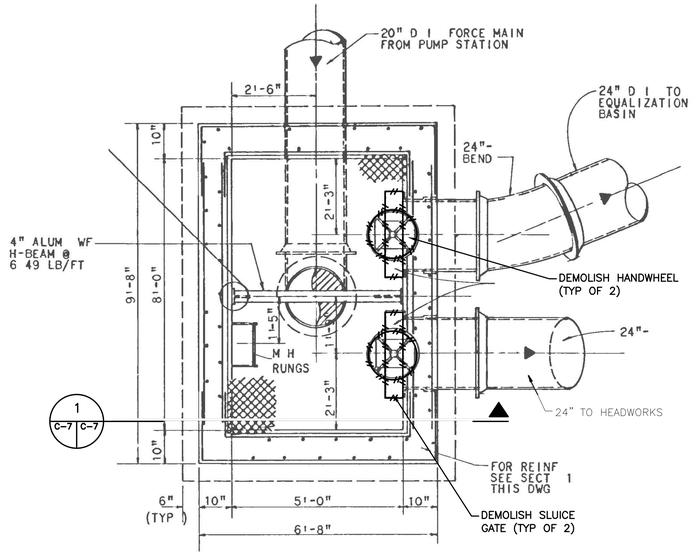

PLAN
SCALE: 1/2"=1'-0"

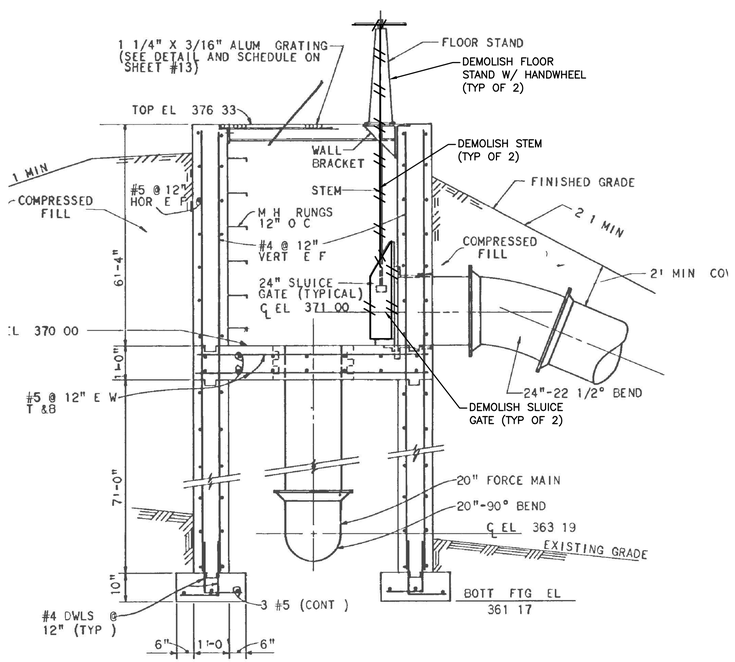

SECTION 1 C-7 C-7
SCALE: 1/2"=1'-0"

DEMOLITION NOTES:

1. COORDINATE DEMOLITION AND CONSTRUCTION ACTIVITIES WITH SEQUENCE OF CONSTRUCTION PRESENTED IN SPEC. SECTION 01400. SEE SPEC. SECTION 02050 FOR DEMOLITION REQUIREMENTS.
2. THE LOCATION, ELEVATION, AND DIMENSIONS OF EXISTING STRUCTURES, PIPING, AND EQUIPMENT SHOWN ARE BASED ON AS-BUILT RECORD DRAWINGS, ARE APPROXIMATE, AND ARE BASED ON BEST AVAILABLE DATA. THE CONTRACTOR SHALL VERIFY ALL DATA IN THE FIELD PRIOR TO DEMOLITION ACTIVITIES.
3. THE CONTRACTOR SHALL DRAIN THE INTERIOR OF EXISTING EQUIPMENT AND STRUCTURES PRIOR TO DEMOLITION. REMOVE AND DISPOSE OF WASTEWATER, SUPERNATANT, SLUDGE, AND OTHER ORGANIC RESIDUALS. DIGESTED SLUDGE SHALL BE PUMPED TO THE CENTRIFUGE FOR DEWATERING. CLEAN AND RINSE EQUIPMENT AND STRUCTURES PRIOR TO DEMOLITION. CLEANING RESIDUALS AND RINSE WATER SHALL BE PUMPED TO THE ONSITE SANITARY SEWER SYSTEM FOR DISPOSAL.
4. PIPING, CONDUIT, STRUCTURES, AND FITTINGS HATCHED ON THESE DRAWINGS SHALL BE DEMOLISHED, REMOVED AND DISPOSED OF UNLESS OTHERWISE INDICATED. ALL ITEMS INDICATED TO BE DEMOLISHED SHALL BE DISPOSED OF OFF THE OWNER'S PROPERTY IN ACCORDANCE WITH ALL LOCAL, STATE, AND FEDERAL REGULATIONS.
5. ELECTRICAL CONDUIT AND WIRING ASSOCIATED WITH ALL EXISTING EQUIPMENT TO BE DEMOLISHED SHALL BE REMOVED IN ITS ENTIRETY.
6. SEAL ALL OPENINGS REMAINING FROM PIPE PENETRATIONS IN CONCRETE FLOOR SLABS WITH ASTM C 1107 NON-SHRINK GROUT, AND PROVIDE WATERTIGHT CONNECTIONS.

IF THIS DRAWING IS A REDUCTION GRAPHIC SCALE MUST BE USED
0 1' 2' 4'
SCALE: 1/2" = 1'-0"

M:\221028 Town of Culpeper WWTP Improvements\221028.00 Design\102800L_EX12.dwg

NO.	SHEET REVISION	BY	DATE

NO.	SHEET REVISION	BY	DATE

COMMONWEALTH OF VIRGINIA
JASON A. CLARK
Lic. No. 33605
4/29/2022
PROFESSIONAL ENGINEER

WWA ENGINEERS SURVEYORS PLANNERS ASSOCIATES
PO Box 4119 Lynchburg, VA 24502 Phone: 434.316.6080
968 Olympia Drive, Suite 1 Charlottesville, VA 22911 Phone: 434.984.2700
www.wwassociates.net

DESIGNED BY: HFW
DRAWN BY: WAM
DIHR BY: HFW
WWA NUMBER: 221028.00

PROJECT: WASTEWATER TREATMENT PLANT IMPROVEMENTS TOWN OF CULPEPER, VIRGINIA
TITLE: EQUALIZATION SPLITTER BOX EXISTING CONDITIONS & DEMOLITION PLAN & SECTION
FILE NAME: 102800L_EX12.dwg
DISCIPLINE: CIVIL
SCALE: H: AS SHOWN V: N/A
SET REV. NO. –
DRAWING NUMBER: C-7
DATE: 4/29/22

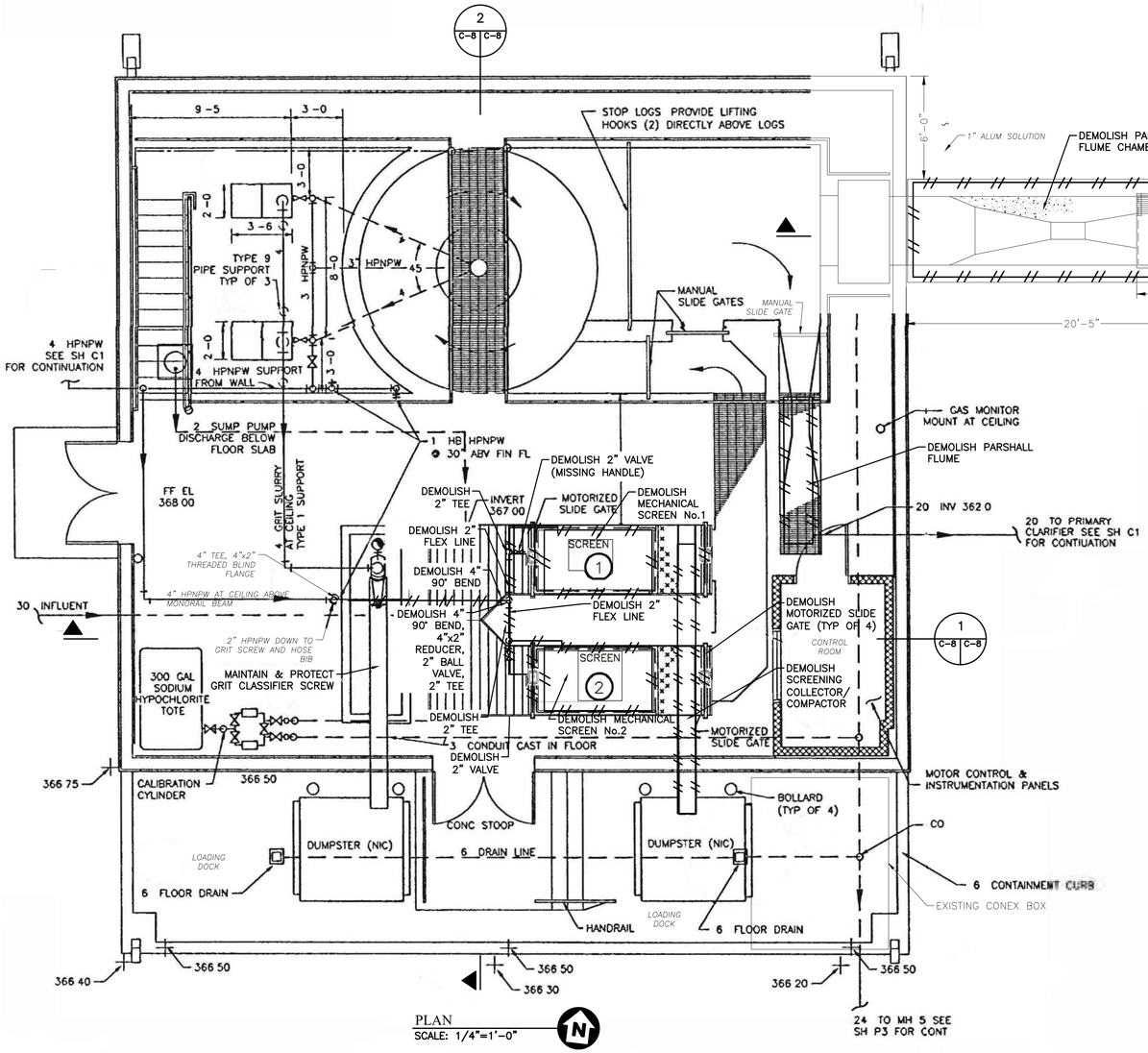

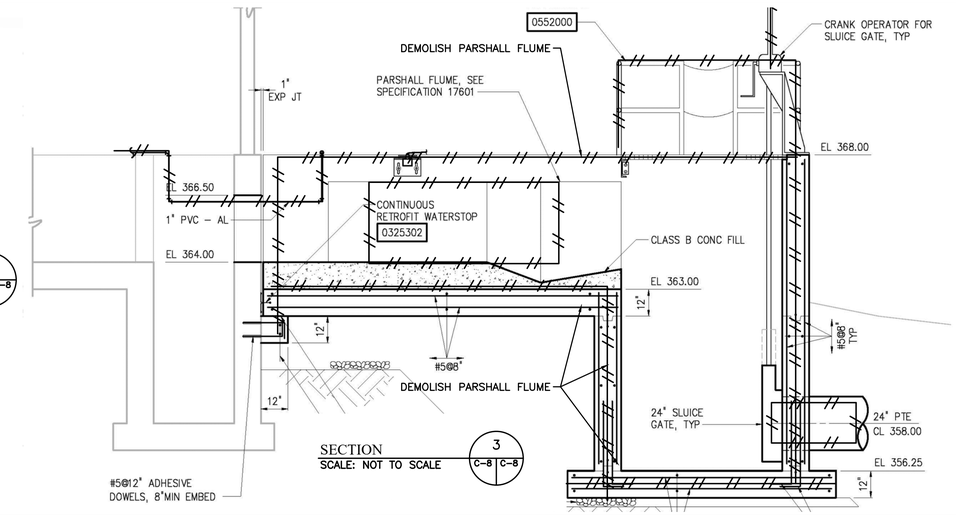

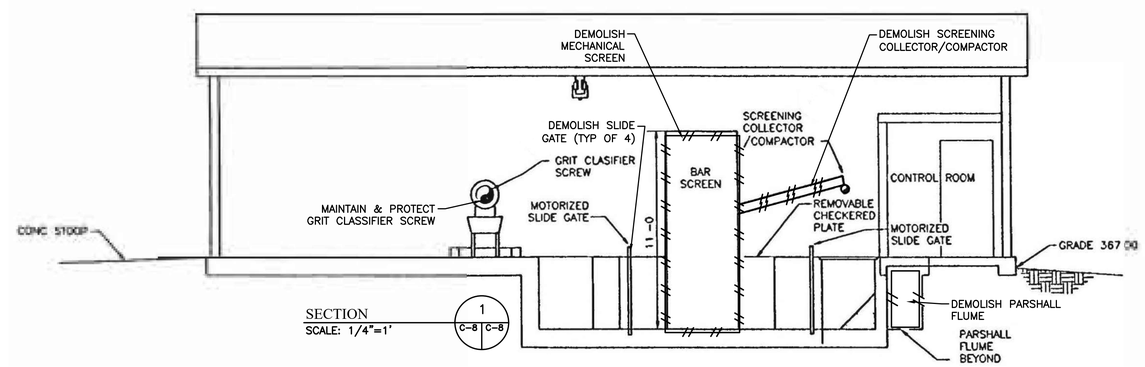

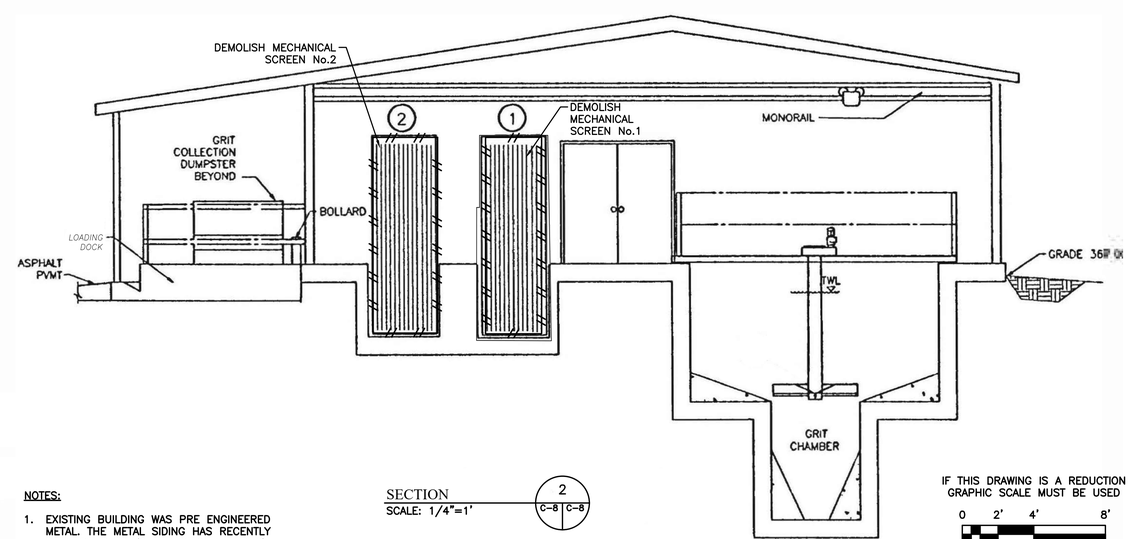

PHOTO 1- HEADWORKS WEST ELEVATION

PHOTO 2- HEADWORKS SOUTH ELEVATION

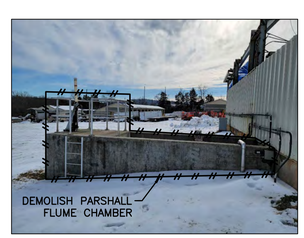

PHOTO 3- PARSHALL FLUME CHAMBER

NOTES:

1. EXISTING BUILDING WAS PRE ENGINEERED METAL. THE METAL SIDING HAS RECENTLY BEEN REMOVED (SEE PHOTOS 1 AND 2).

IF THIS DRAWING IS A REDUCTION GRAPHIC SCALE MUST BE USED

0 2' 4' 8'

SCALE: 1/4" = 1'-0"

NO.	SHEET REVISION	BY	DATE

NO.	SHEET REVISION	BY	DATE

COMMONWEALTH OF VIRGINIA
JASON A. CLARK
Lic. No. 33605
4/29/2022
PROFESSIONAL ENGINEER

WWA ENGINEERS SURVEYORS PLANNERS ASSOCIATES
PO Box 4119 Lynchburg, VA 24502 Phone: 434.316.6080
968 Olympia Drive, Suite 1 Charlottesville, VA 22911 Phone: 434.984.2700
www.wwassociates.net

DESIGNED BY: HFW	PROJECT: WASTEWATER TREATMENT PLANT IMPROVEMENTS TOWN OF CULPEPER, VIRGINIA		SET REV. NO. –
DRAWN BY: WAM	TITLE: HEADWORKS BUILDING (BUILDING #3) EXISTING CONDITIONS & DEMOLITION PLAN & SECTION		DRAWING NUMBER: C-8
DIHR BY: HFW			
WWA NUMBER: 221028.00	FILE NAME: 102800L_EX13.dwg	DISCIPLINE: CIVIL	SCALE: H: AS SHOWN V: N/A
			DATE: 4/29/22

M:\221028 Town of Culpeper WWTP Improvements\221028.00 Design\102800L_EX13.dwg

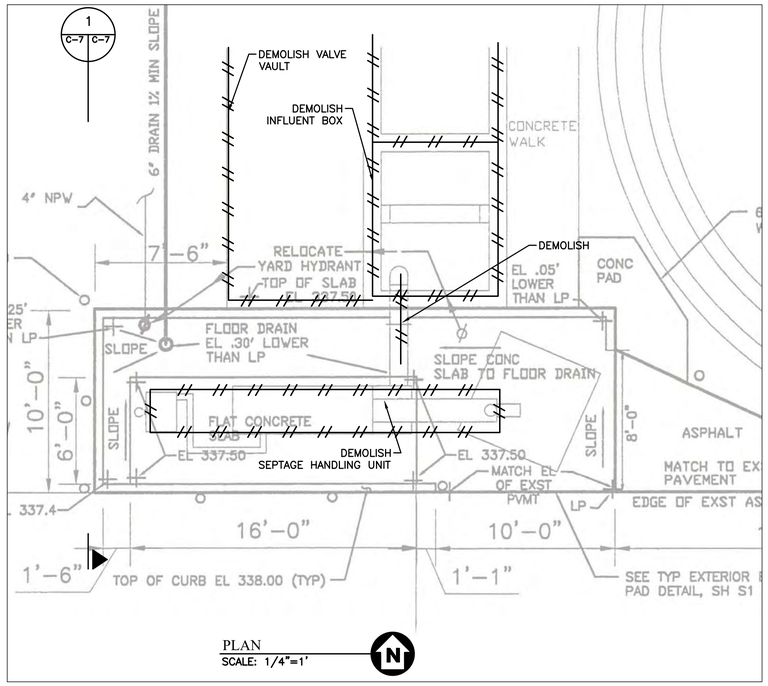

PLAN
SCALE: 1/4"=1'

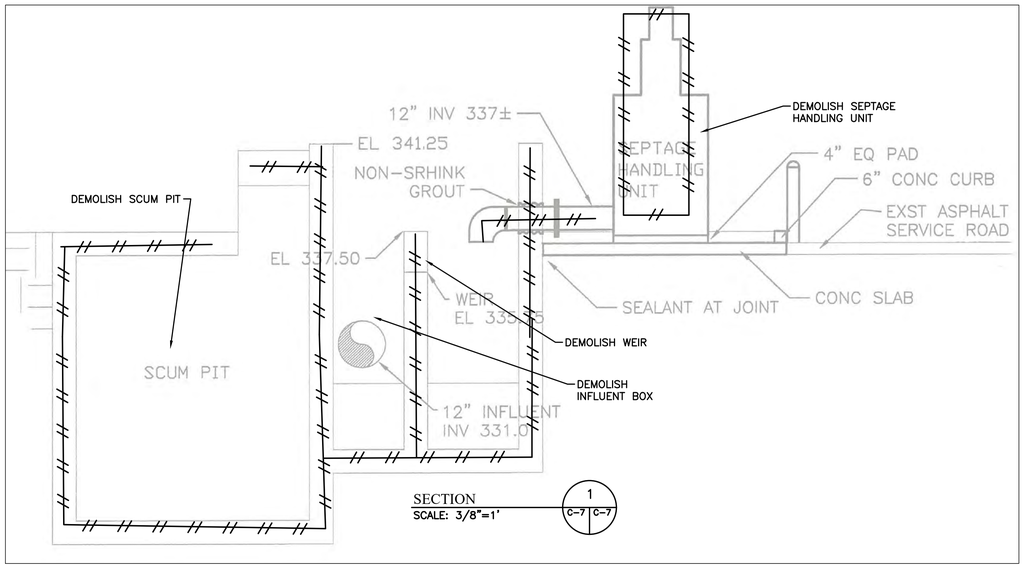

SECTION
SCALE: 3/8"=1'
1
C-7 C-7

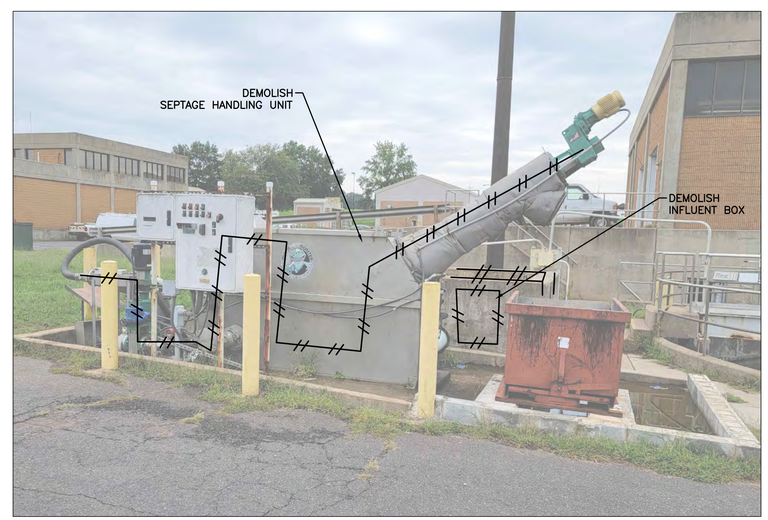

PHOTO 1-SEPTAGE RECEIVING STATION

IF THIS DRAWING IS A REDUCTION GRAPHIC SCALE MUST BE USED
0 2' 4' 8'
SCALE: 1/4" = 1'-0"

IF THIS DRAWING IS A REDUCTION GRAPHIC SCALE MUST BE USED
0 1' 3' 6'
SCALE: 3/8" = 1'-0"

NO.	SHEET REVISION	BY	DATE	NO.	SHEET REVISION	BY	DATE

COMMONWEALTH OF VIRGINIA
JASON A. CLARK
Lic. No. 33605
4/29/2022
PROFESSIONAL ENGINEER

WW ASSOCIATES
ENGINEERS SURVEYORS PLANNERS
PO Box 4119 Lynchburg, VA 24502 Phone: 434.316.6080
968 Olympia Drive, Suite 1 Charlottesville, VA 22911 Phone: 434.984.2700
WWW.WWASSOCIATES.NET

DESIGNED BY: JAC	PROJECT: WASTEWATER TREATMENT PLANT IMPROVEMENTS TOWN OF CULPEPER, VIRGINIA		SET REV. NO. –
DRAWN BY: WAM	TITLE: SEPTAGE RECEIVING STATION EXISTING CONDITIONS AND DEMOLITION PLAN & SECTION		DRAWING NUMBER: C-9
DIHR BY: HFW			
WWA NUMBER: 221028.00	FILE NAME: 102800L_EX8.dwg	DISCIPLINE: CIVIL	SCALE: H: AS SHOWN V: N/A	DATE: 4/29/22

M:\221028 Town of Culpeper WWTP Improvements\221028.00 Design\102800L_EX8.dwg

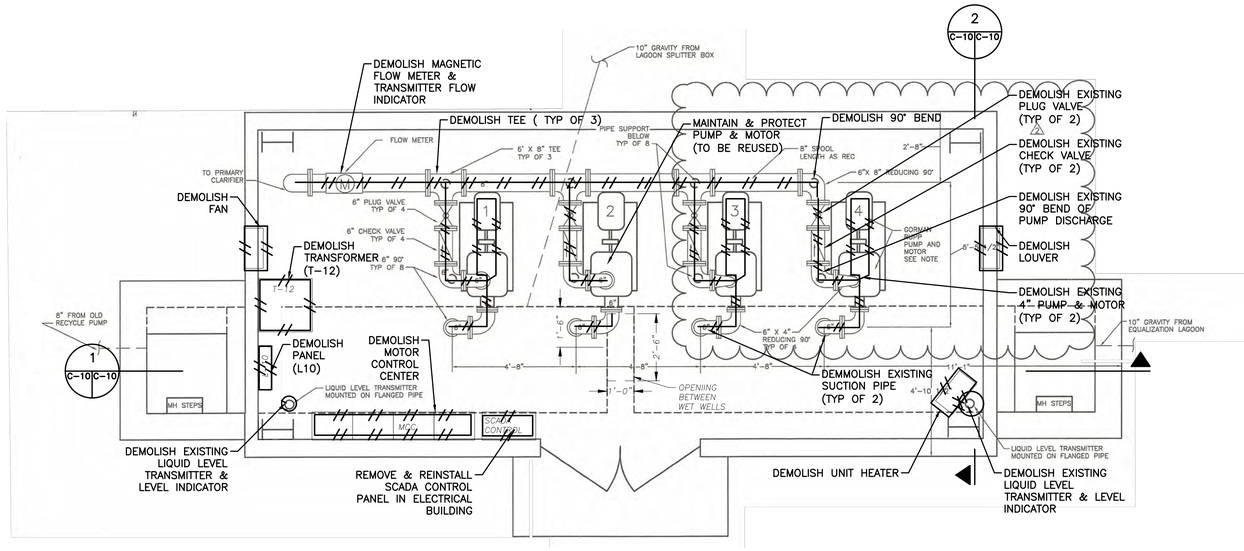

PLAN
SCALE: 3/8"=1'-0"

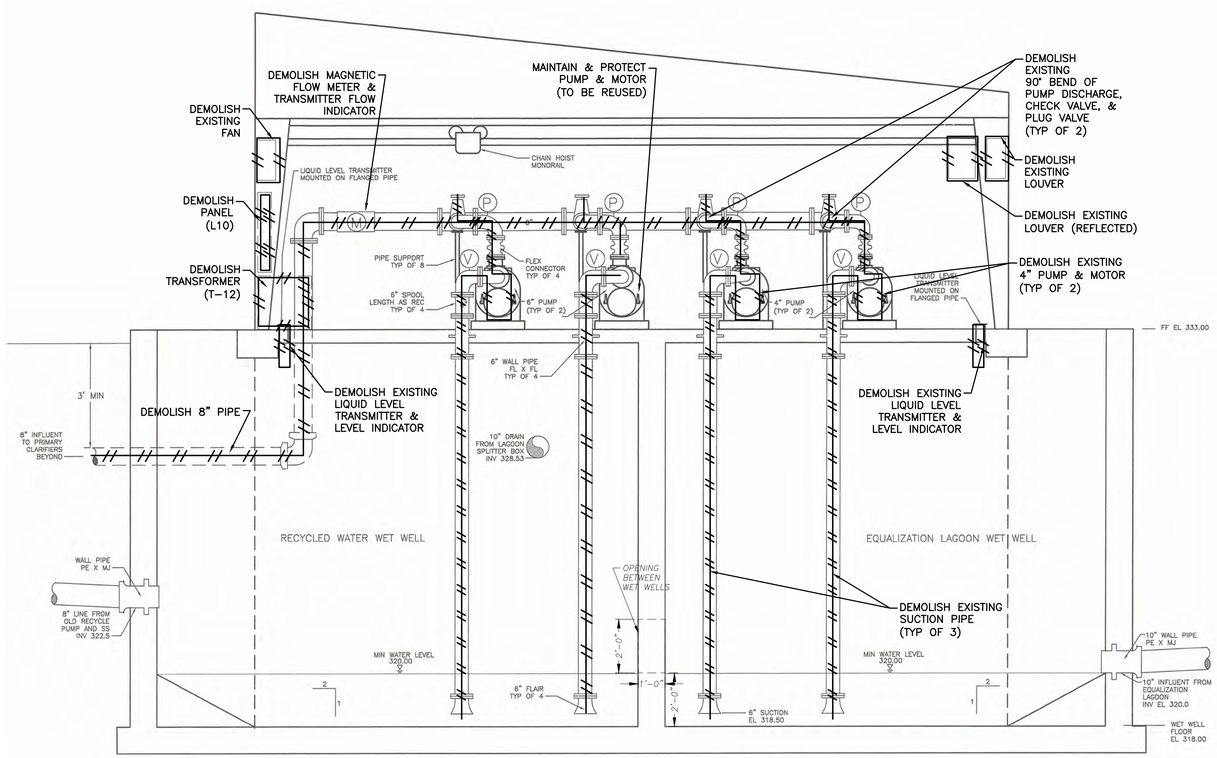

SECTION 1
SCALE: 3/8"=1'-0"

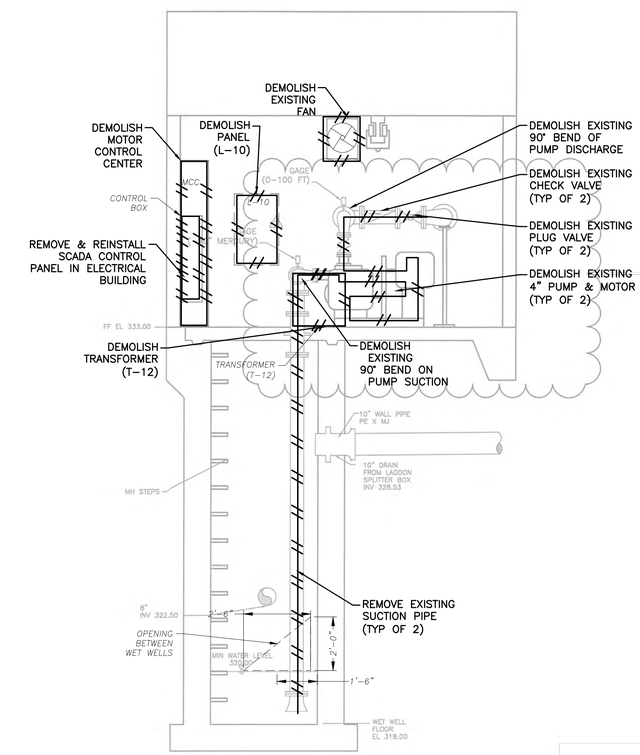

SECTION 2
SCALE: 3/8"=1'-0"

IF THIS DRAWING IS A REDUCTION GRAPHIC SCALE MUST BE USED
0 1' 3' 6'
SCALE: 3/8" = 1'-0"

NO.	SHEET REVISION	BY	DATE	NO.	SHEET REVISION	BY	DATE

COMMONWEALTH OF VIRGINIA
JASON A. CLARK
Lic. No. 33605
4/29/2022
PROFESSIONAL ENGINEER

WWA ENGINEERS SURVEYORS PLANNERS ASSOCIATES
PO Box 4119 Lynchburg, VA 24502 Phone: 434.316.6080
968 Olympia Drive, Suite 1 Charlottesville, VA 22911 Phone: 434.984.2700
www.wwassociates.net

DESIGNED BY: JAC	PROJECT: WASTEWATER TREATMENT PLANT IMPROVEMENTS TOWN OF CULPEPER, VIRGINIA		SET REV. NO. —
DRAWN BY: WAM	TITLE: DRAIN PUMP STATION (BUILDING #8) EXISTING CONDITIONS AND DEMOLITION PLAN & SECTIONS		DRAWING NUMBER: C-10
DIHR BY: HFW			
WWA NUMBER: 221028.00	FILE NAME: 102800L_EX7.dwg	DISCIPLINE: CIVIL	SCALE: H: AS SHOWN V: N/A	DATE: 4/29/22

M:\221028 Town of Culpeper WWTP Improvements\221028.00 Design\102800L_EX7.dwg

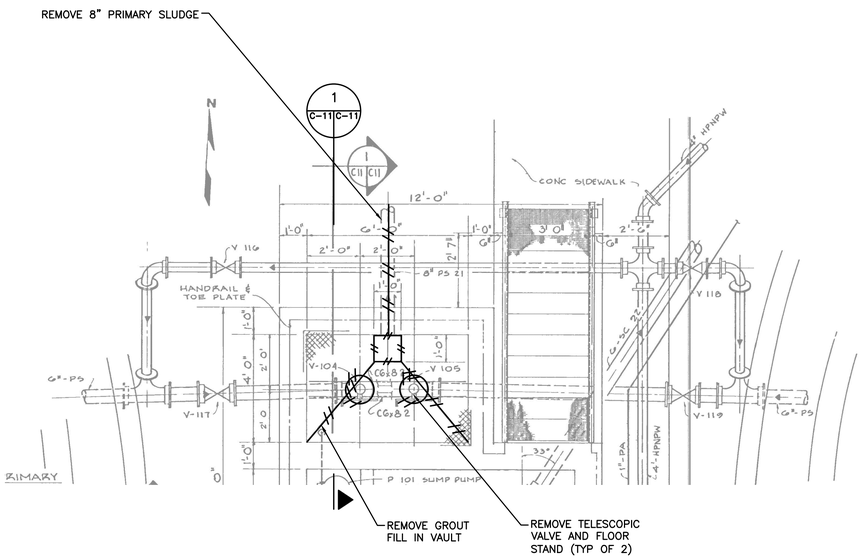

PLAN
SCALE: 3/8"=1'-0"

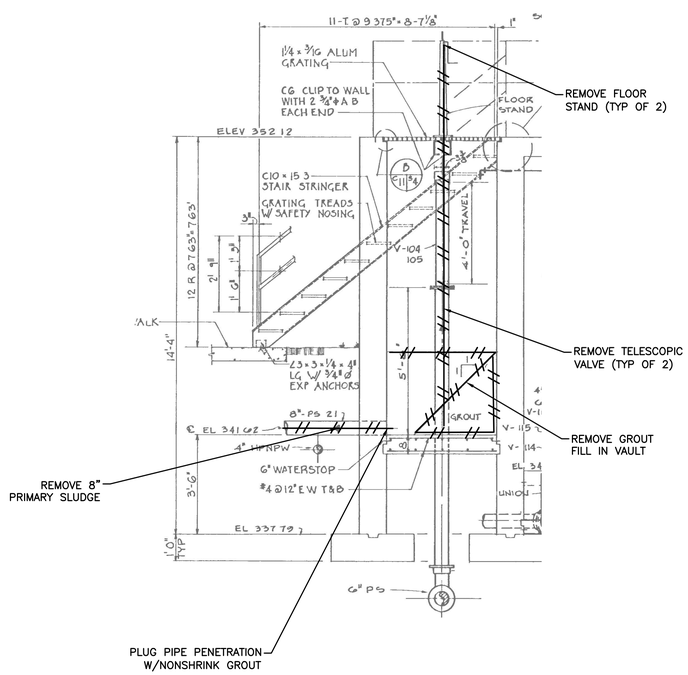

SECTION
SCALE: 3/8"=1'-0"

IF THIS DRAWING IS A REDUCTION GRAPHIC SCALE MUST BE USED

0 1' 3' 6'

SCALE: 3/8" = 1'-0"

M:\221028 Town of Culpeper WWTP Improvements\221028.00 Design\102800L_EX3.dwg

NO.	SHEET REVISION	BY	DATE

NO.	SHEET REVISION	BY	DATE

COMMONWEALTH OF VIRGINIA
JASON A. CLARK
Lic. No. 33605
4/29/2022
PROFESSIONAL ENGINEER

WWA ENGINEERS SURVEYORS PLANNERS ASSOCIATES
PO Box 4119 Lynchburg, VA 24502 Phone: 434.316.6080
968 Olympia Drive, Suite 1 Charlottesville, VA 22911 Phone: 434.984.2700
www.wwassociates.net

DESIGNED BY: JAC
DRAWN BY: WAM
DIHR BY: HFW
WWA NUMBER: 221028.00

PROJECT: WASTEWATER TREATMENT PLANT IMPROVEMENTS TOWN OF CULPEPER, VIRGINIA

TITLE: PRIMARY CLARIFIER SLUDGE STATION EXISTING CONDITIONS & DEMOLITION PLAN & SECTION

FILE NAME: 102800L_EX3.dwg
DISCIPLINE: CIVIL
SCALE: H: AS SHOWN V: N/A

SET REV. NO. –
DRAWING NUMBER: C-11
DATE: 4/29/22

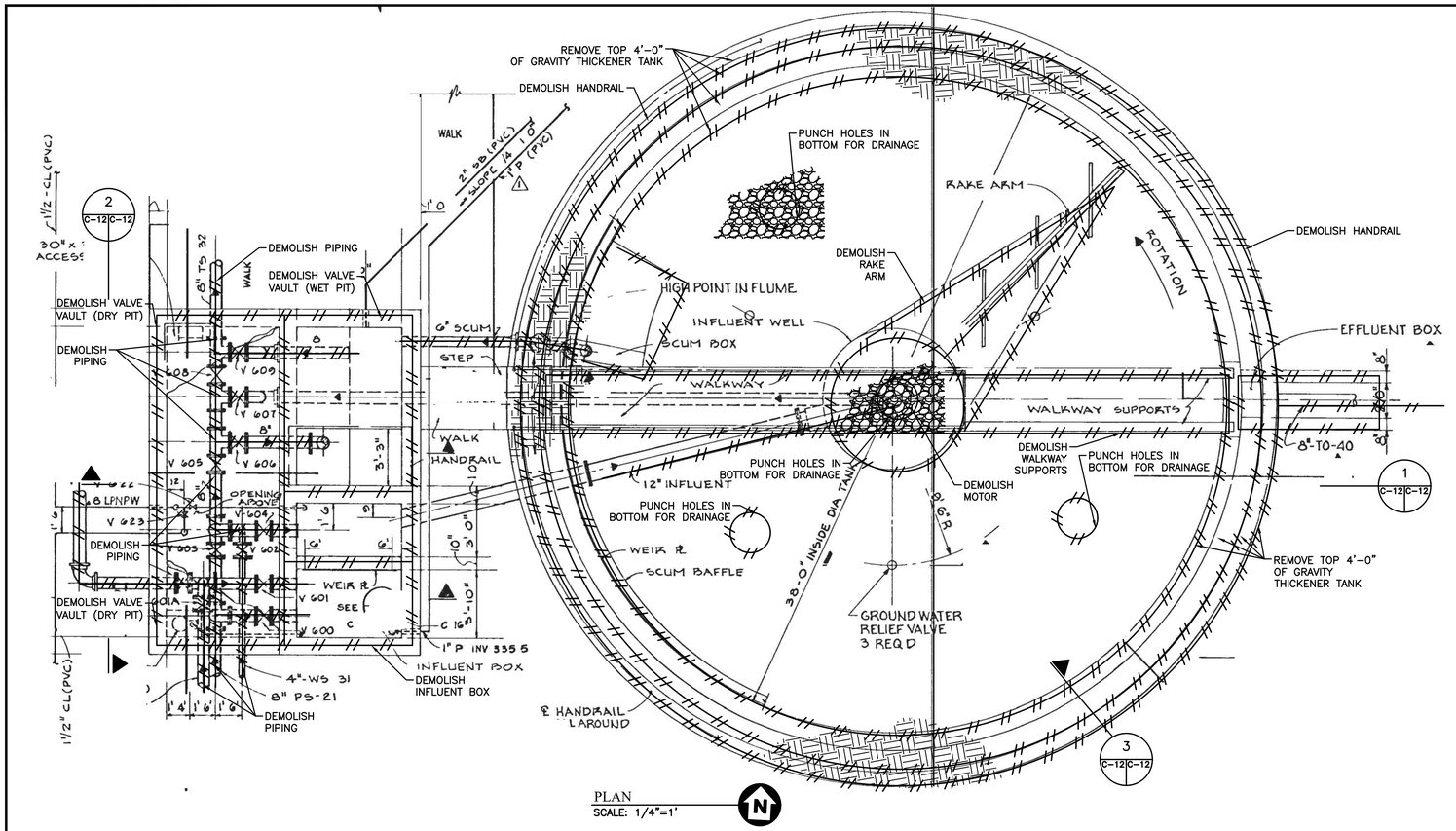

PLAN
SCALE: 1/4"=1'

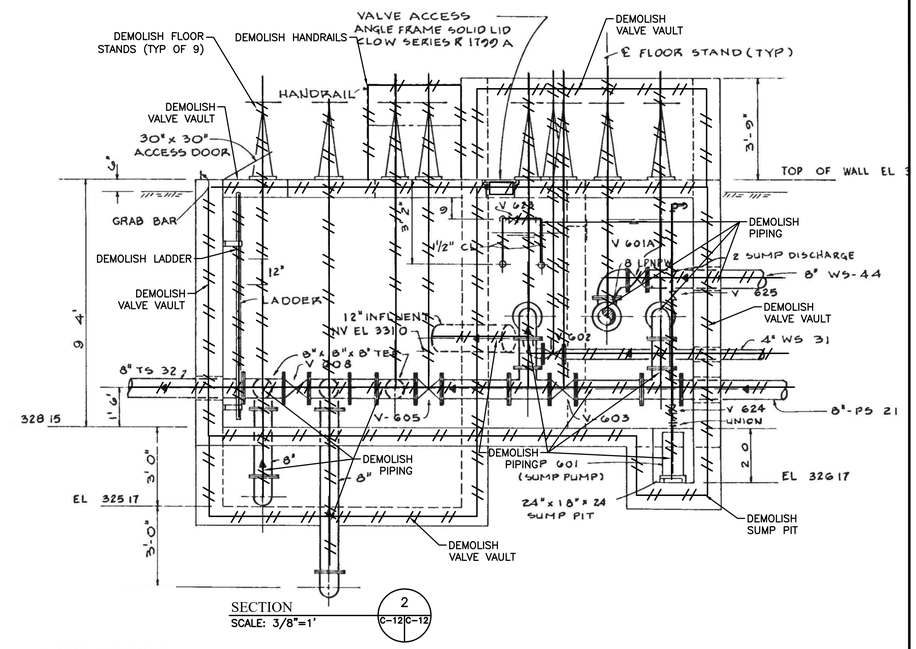

SECTION
SCALE: 3/8"=1'

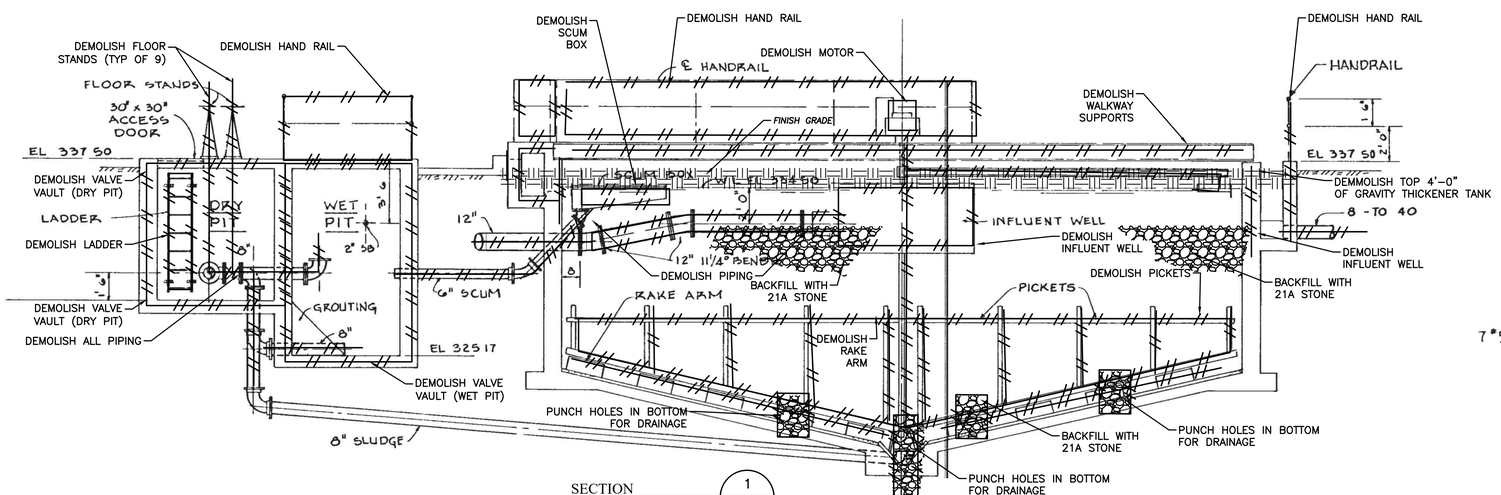

SECTION
SCALE: 1/4"=1'

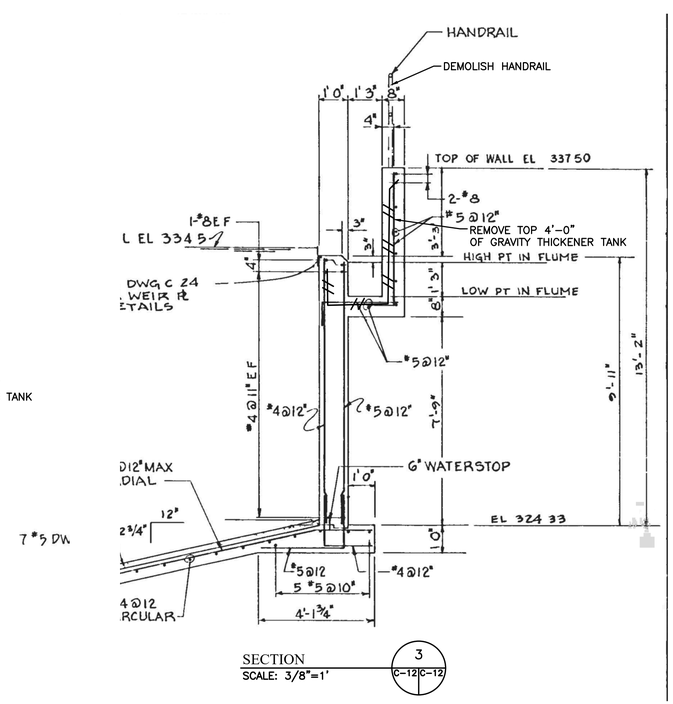

SECTION
SCALE: 3/8"=1'

IF THIS DRAWING IS A REDUCTION GRAPHIC SCALE MUST BE USED
0 2' 4' 8'
SCALE: 1/4" = 1'-0"

IF THIS DRAWING IS A REDUCTION GRAPHIC SCALE MUST BE USED
0 1' 3' 6'
SCALE: 3/8" = 1'-0"

NO.	SHEET REVISION	BY	DATE

NO.	SHEET REVISION	BY	DATE

COMMONWEALTH OF VIRGINIA
JASON A. CLARK
Lic. No. 33605
4/29/2022
PROFESSIONAL ENGINEER

WWA ENGINEERS SURVEYORS PLANNERS ASSOCIATES
PO Box 4119 Lynchburg, VA 24502 Phone: 434.316.6080
968 Olympia Drive, Suite 1 Charlottesville, VA 22911 Phone: 434.984.2700
www.wwassociates.net

DESIGNED BY: JAC	PROJECT: WASTEWATER TREATMENT PLANT IMPROVEMENTS TOWN OF CULPEPER, VIRGINIA		SET REV. NO. —
DRAWN BY: WAM	TITLE: GRAVITY THICKENER EXISTING CONDITIONS AND DEMOLITION PLAN & SECTIONS		DRAWING NUMBER: C-12
DIHR BY: HFW			
WWA NUMBER: 221028.00	FILE NAME: 102800L_EX4.dwg	DISCIPLINE: CIVIL	SCALE: H: AS SHOWN V: N/A
			DATE: 4/29/22

M:\221028 Town of Culpeper WWTP Improvements\221028.00 Design\102800L_EX4.dwg

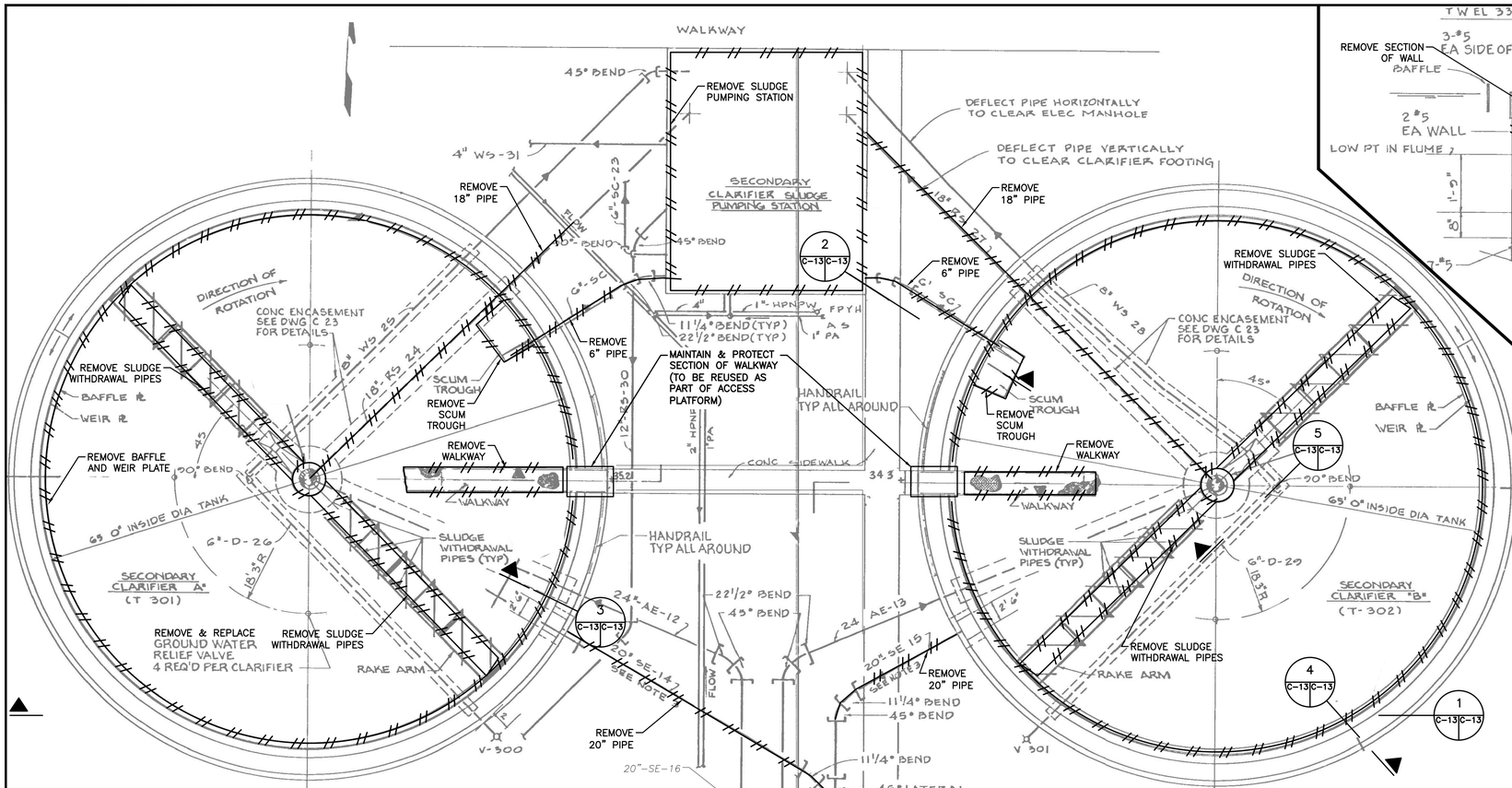

PLAN
SCALE: 1/8"=1'-0"

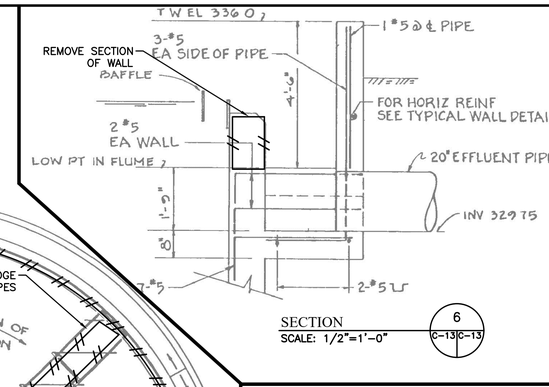

SECTION 6 C-13|C-13
SCALE: 1/2"=1'-0"

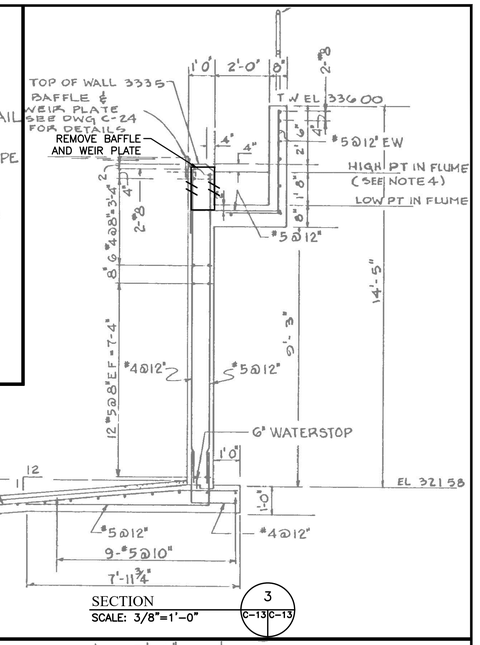

SECTION 3 C-13|C-13
SCALE: 3/8"=1'-0"

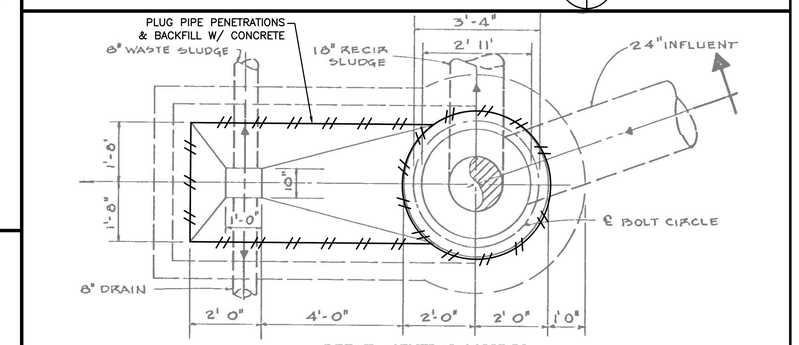

DETAIL - CENTRAL COLUMN
SCALE: NOT TO SCALE

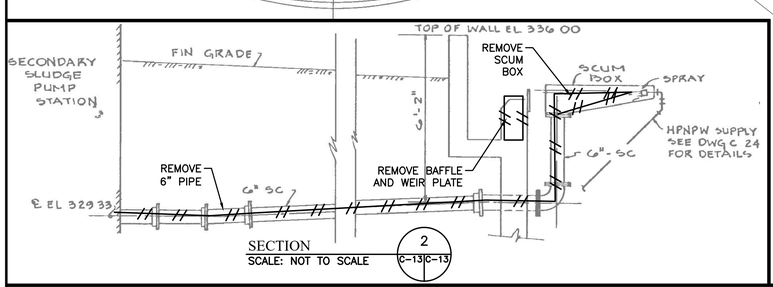

SECTION 2 C-13|C-13
SCALE: NOT TO SCALE

IF THIS DRAWING IS A REDUCTION GRAPHIC SCALE MUST BE USED
0 4' 8' 16'
SCALE: 1/8" = 1'-0"

IF THIS DRAWING IS A REDUCTION GRAPHIC SCALE MUST BE USED
0 1' 3' 6'
SCALE: 3/8" = 1'-0"

IF THIS DRAWING IS A REDUCTION GRAPHIC SCALE MUST BE USED
0 1' 2' 4'
SCALE: 1/2" = 1'-0"

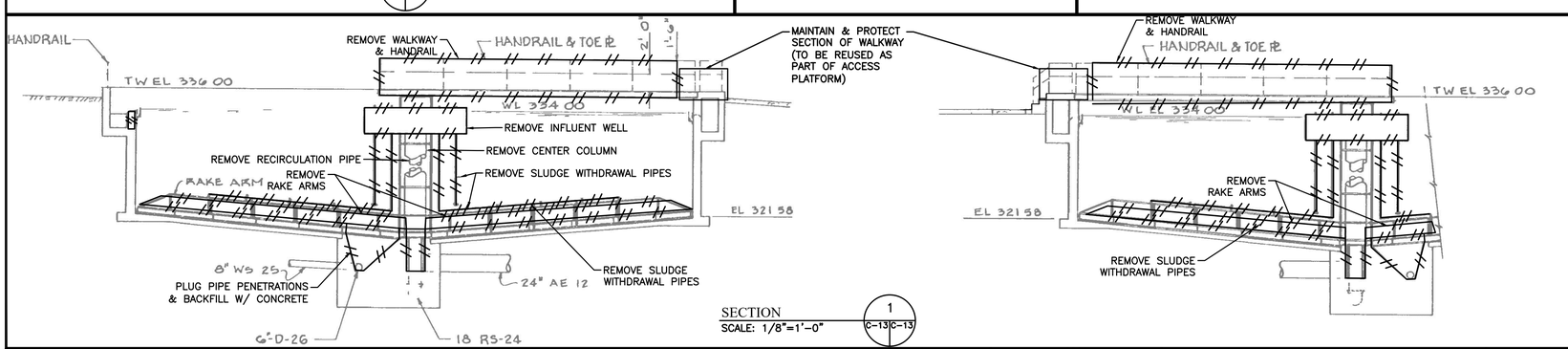

SECTION 1 C-13|C-13
SCALE: 1/8"=1'-0"

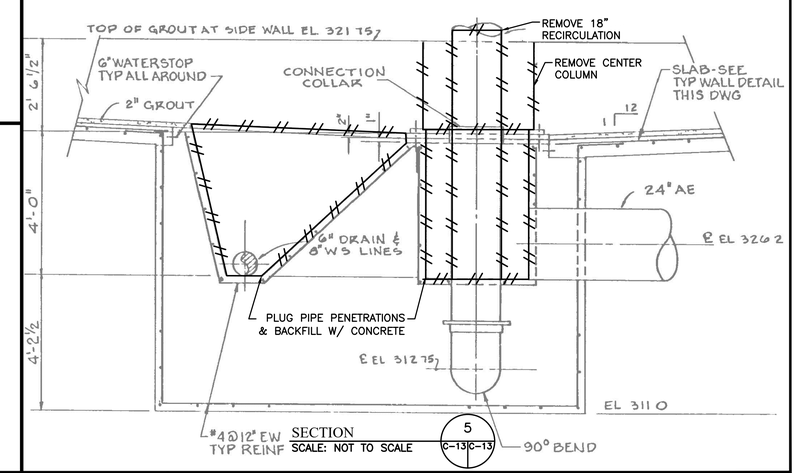

SECTION 5 C-13|C-13
SCALE: NOT TO SCALE

NO.	SHEET REVISION	BY	DATE	NO.	SHEET REVISION	BY	DATE

COMMONWEALTH OF VIRGINIA
JASON A. CLARK
Lic. No. 33605
4/29/2022
PROFESSIONAL ENGINEER

WWA ENGINEERS SURVEYORS PLANNERS ASSOCIATES
PO Box 4119 Lynchburg, VA 24502 Phone: 434.316.6080
968 Olympia Drive, Suite 1 Charlottesville, VA 22911 Phone: 434.984.2700
www.wwassociates.net

DESIGNED BY: JAC	PROJECT: WASTEWATER TREATMENT PLANT IMPROVEMENTS TOWN OF CULPEPER, VIRGINIA		SET REV. NO. –
DRAWN BY: WAM	TITLE: SECONDARY CLARIFIERS A & B EXISITING CONDITIONS & DEMOLITION PLAN & SECTION		DRAWING NUMBER: C-13
DIHR BY: HFW			
WWA NUMBER: 221028.00	FILE NAME: 102800L_EX11.dwg	DISCIPLINE: CIVIL	SCALE: H: AS SHOWN V: N/A	DATE: 4/29/22

M:\221028 Town of Culpeper WWTP Improvements\221028.00 Design\102800L_EX11.dwg

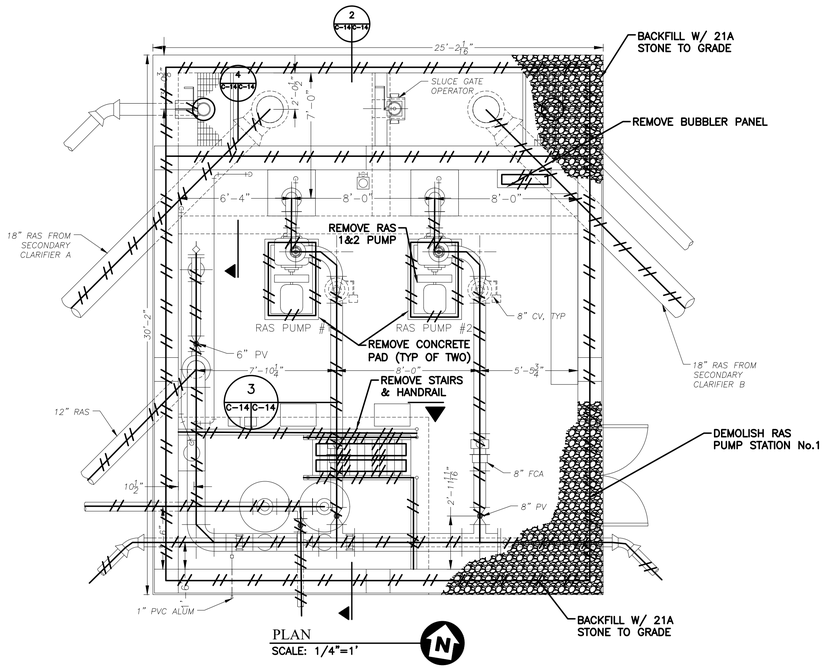

PLAN
SCALE: 1/4"=1'

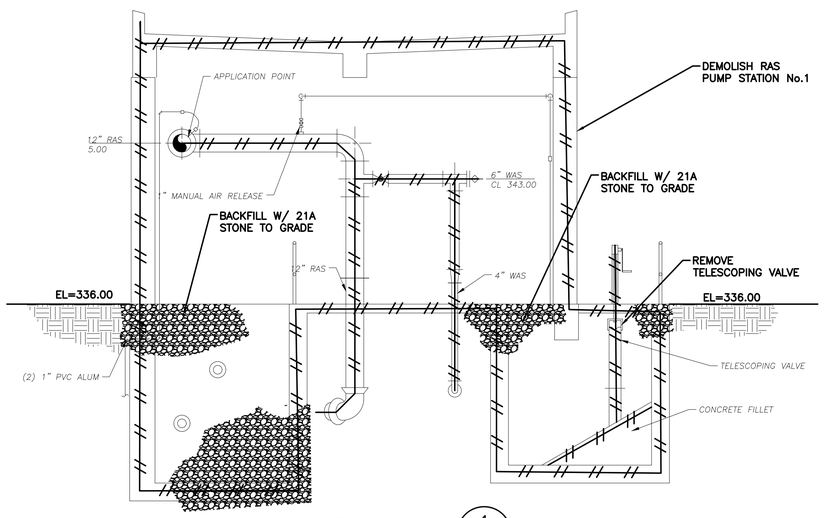

SECTION 1
SCALE: 1/4"=1'
C-14|C-14

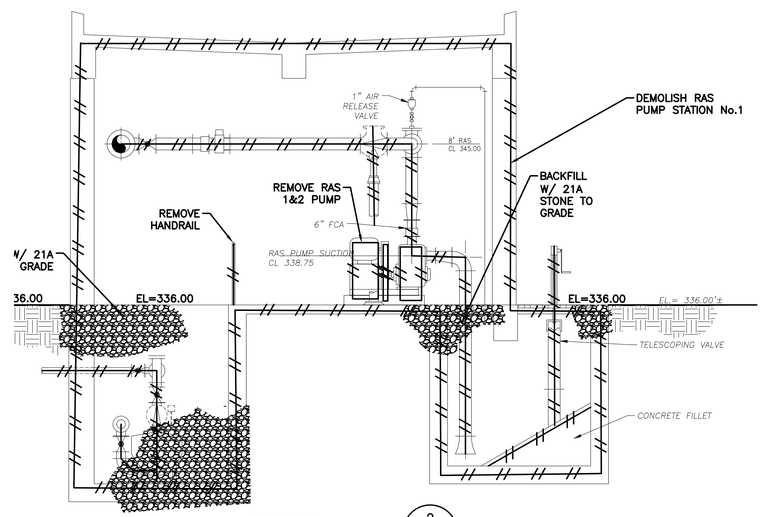

SECTION 2
SCALE: 1/4"=1'
C-14|C-14

IF THIS DRAWING IS A REDUCTION GRAPHIC SCALE MUST BE USED

0 2' 4' 8'

SCALE: 1/4" = 1'-0"

M:\221028 Town of Culpeper WWTP Improvements\221028.00 Design\102800L_EX10.dwg

NO.	SHEET REVISION	BY	DATE	NO.	SHEET REVISION	BY	DATE

COMMONWEALTH OF VIRGINIA
JASON A. CLARK
Lic. No. 33605
4/29/2022
PROFESSIONAL ENGINEER

WW ASSOCIATES
ENGINEERS SURVEYORS PLANNERS
PO Box 4119 Lynchburg, VA 24502 Phone: 434.316.6080
968 Olympia Drive, Suite 1 Charlottesville, VA 22911 Phone: 434.984.2700
WWW.WWASSOCIATES.NET

DESIGNED BY: JAC	PROJECT: WASTEWATER TREATMENT PLANT IMPROVEMENTS TOWN OF CULPEPER, VIRGINIA		SET REV. NO. —
DRAWN BY: WAM	TITLE: RAS PUMP STATION No.1 EXISITNG CONDITIONS & DEMOLITION PLAN & SECTIONS		DRAWING NUMBER: C-14
DIHR BY: HFW			
WWA NUMBER: 221028.00	FILE NAME: 102800L_EX10.dwg	DISCIPLINE: CIVIL	SCALE: H: AS SHOWN V: N/A	DATE: 4/29/22

NOTE:

1. DEMOLISH ALL INTERNAL MECHANICAL EQUIPMENT & PIPING IN DIGESTERS.

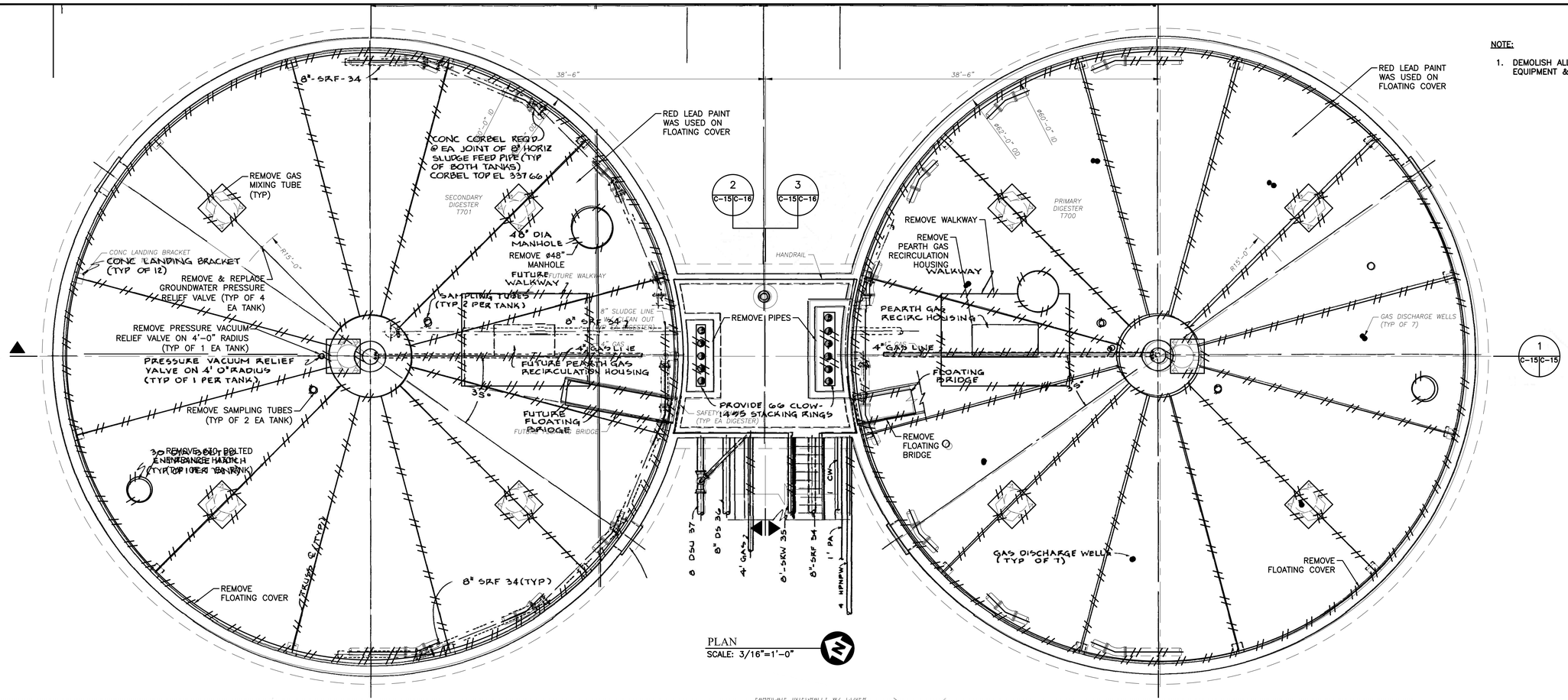

PLAN
SCALE: 3/16"=1'-0"

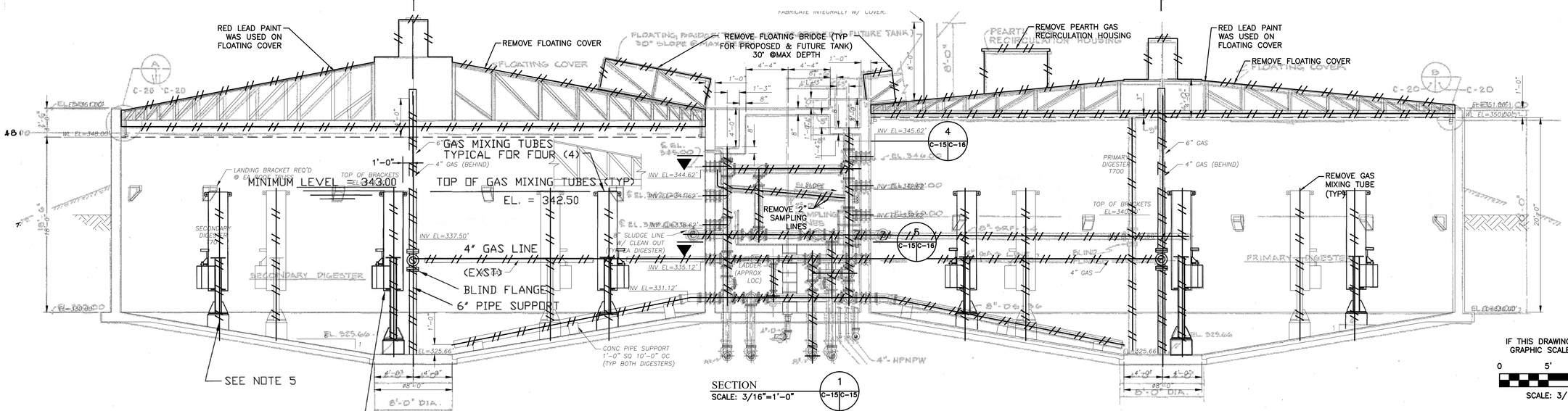

SECTION
SCALE: 3/16"=1'-0"

IF THIS DRAWING IS A REDUCTION GRAPHIC SCALE MUST BE USED

0 5' 10' 15'

SCALE: 3/16" = 1'-0"

NO.	SHEET REVISION	BY	DATE

NO.	SHEET REVISION	BY	DATE

COMMONWEALTH OF VIRGINIA
JASON A. CLARK
Lic. No. 33605
4/29/2022
PROFESSIONAL ENGINEER

WWA ENGINEERS SURVEYORS PLANNERS ASSOCIATES
PO Box 4119 Lynchburg, VA 24502 Phone: 434.316.6080
968 Olympia Drive, Suite 1 Charlottesville, VA 22911 Phone: 434.984.2700
www.wwassociates.net

DESIGNED BY: JAC	PROJECT: WASTEWATER TREATMENT PLANT IMPROVEMENTS TOWN OF CULPEPER, VIRGINIA		SET REV. NO. –
DRAWN BY: DJC	TITLE: ANAEROBIC DIGESTERS EXISTING CONDITIONS & DEMOLITION PLAN & SECTION		DRAWING NUMBER: C-15
DIHR BY: HFW			
WWA NUMBER: 221028.00	FILE NAME: 102800L_EX1.dwg	DISCIPLINE: CIVIL	SCALE: H: AS SHOWN V: N/A
			DATE: 4/29/22

M:\221028 Town of Culpeper WWTP Improvements\221028.00 Design\102800L_EX1.dwg

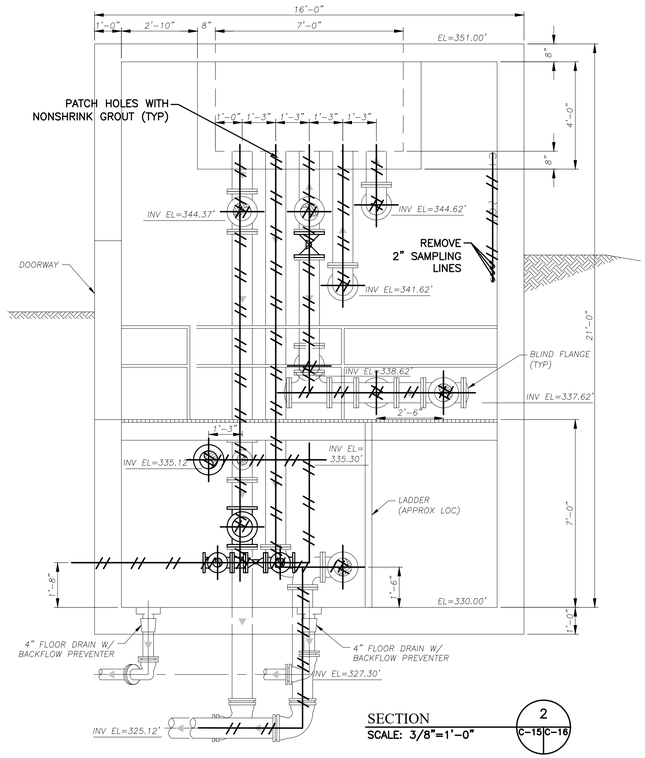

SECTION 2 (C-15 | C-16)
SCALE: 3/8"=1'-0"

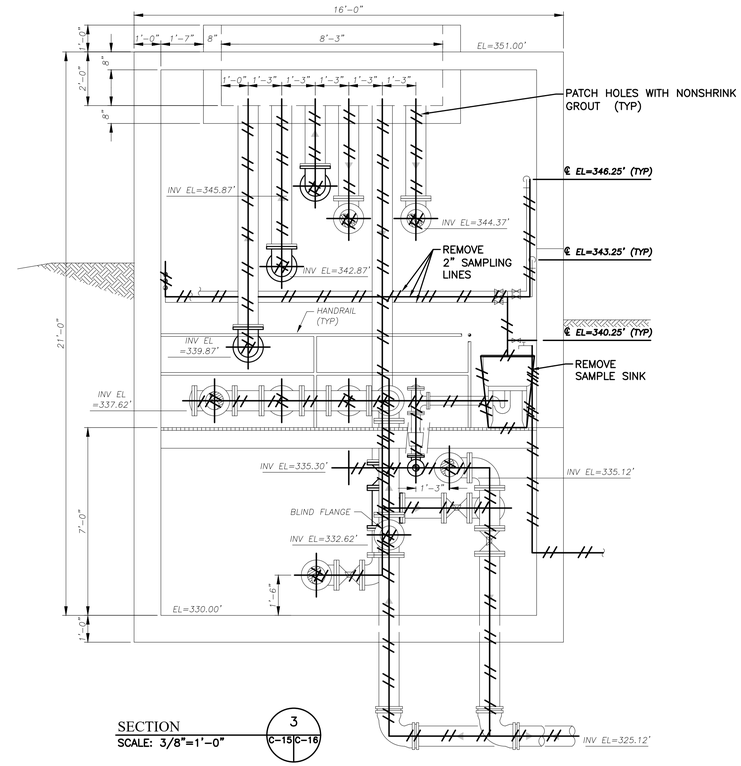

SECTION 3 (C-15 | C-16)
SCALE: 3/8"=1'-0"

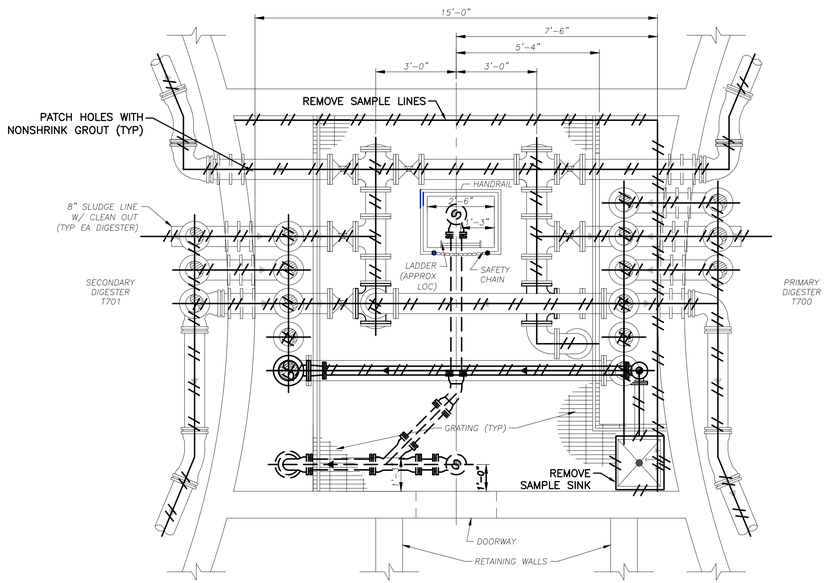

SECTION 4 (C-15 | C-16)
SCALE: 3/8"=1'-0"

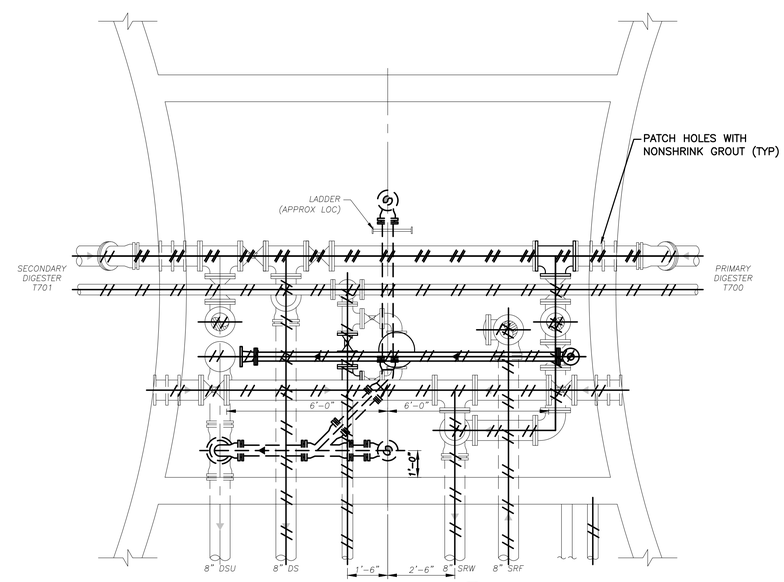

SECTION 5 (C-15 | C-16)
SCALE: 3/8"=1'-0"

IF THIS DRAWING IS A REDUCTION GRAPHIC SCALE MUST BE USED

0 1' 3' 6'

SCALE: 3/8" = 1'-0"

M:\221028 Town of Culpeper WWTP Improvements\221028.00 Design\102800L_EX2.dwg

NO.	SHEET REVISION	BY	DATE

NO.	SHEET REVISION	BY	DATE

COMMONWEALTH OF VIRGINIA
JASON A. CLARK
Lic. No. 33605
4/29/2022
PROFESSIONAL ENGINEER

WWA ASSOCIATES
ENGINEERS SURVEYORS PLANNERS
PO Box 4119 Lynchburg, VA 24502 Phone: 434.316.6080
968 Olympia Drive, Suite 1 Charlottesville, VA 22911 Phone: 434.984.2700
WWW.WWAASSOCIATES.NET

DESIGNED BY: JAC	PROJECT: WASTEWATER TREATMENT PLANT IMPROVEMENTS TOWN OF CULPEPER, VIRGINIA		SET REV. NO. —
DRAWN BY: DJC	TITLE: ANAEROBIC DIGESTERS EXISTING CONDITIONS & DEMOLITION SECTION		DRAWING NUMBER: C-16
DIHR BY: HFW			
WWA NUMBER: 221028.00	FILE NAME: 102800L_EX2.dwg	DISCIPLINE: CIVIL	SCALE: H: AS SHOWN V: N/A	DATE: 4/29/22

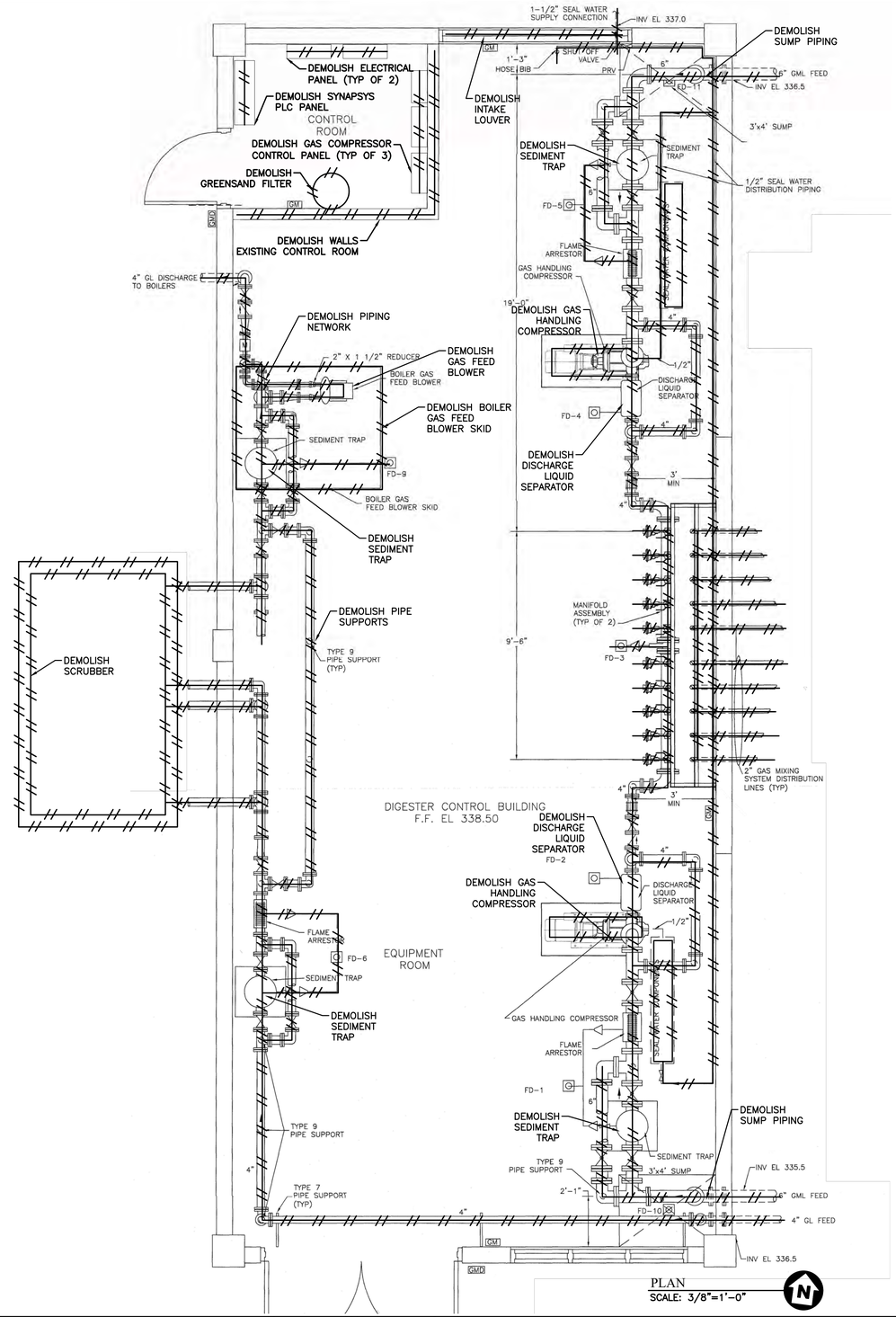

IF THIS DRAWING IS A REDUCTION GRAPHIC SCALE MUST BE USED

0 1' 3' 6'

SCALE: 3/8" = 1'-0"

M:\221028 Town of Culpeper WWTP Improvements\221028.00 Design\102800L_EX9.dwg

NO.	SHEET REVISION	BY	DATE	NO.	SHEET REVISION	BY	DATE

COMMONWEALTH OF VIRGINIA
JASON A. CLARK
Lic. No. 33605
4/29/2022
PROFESSIONAL ENGINEER

WWA ENGINEERS SURVEYORS PLANNERS ASSOCIATES
PO Box 4119 Lynchburg, VA 24502 Phone: 434.316.6080
968 Olympia Drive, Suite 1 Charlottesville, VA 22911 Phone: 434.984.2700
www.wwassociates.net

DESIGNED BY: JAC	PROJECT: WASTEWATER TREATMENT PLANT IMPROVEMENTS TOWN OF CULPEPER, VIRGINIA		SET REV. NO. —
DRAWN BY: DJC	TITLE: DIGESTER CONTROL (GAS RECOVERY) BUILDING (BUILDING #11) – EXISTING CONDITIONS & DEMOLITION PLAN		DRAWING NUMBER: C-17
DIHR BY: HFW			
WWA NUMBER: 221028.00	FILE NAME: 102800L_EX9.dwg	DISCIPLINE: CIVIL	SCALE: H: AS SHOWN V: N/A	DATE: 4/29/22

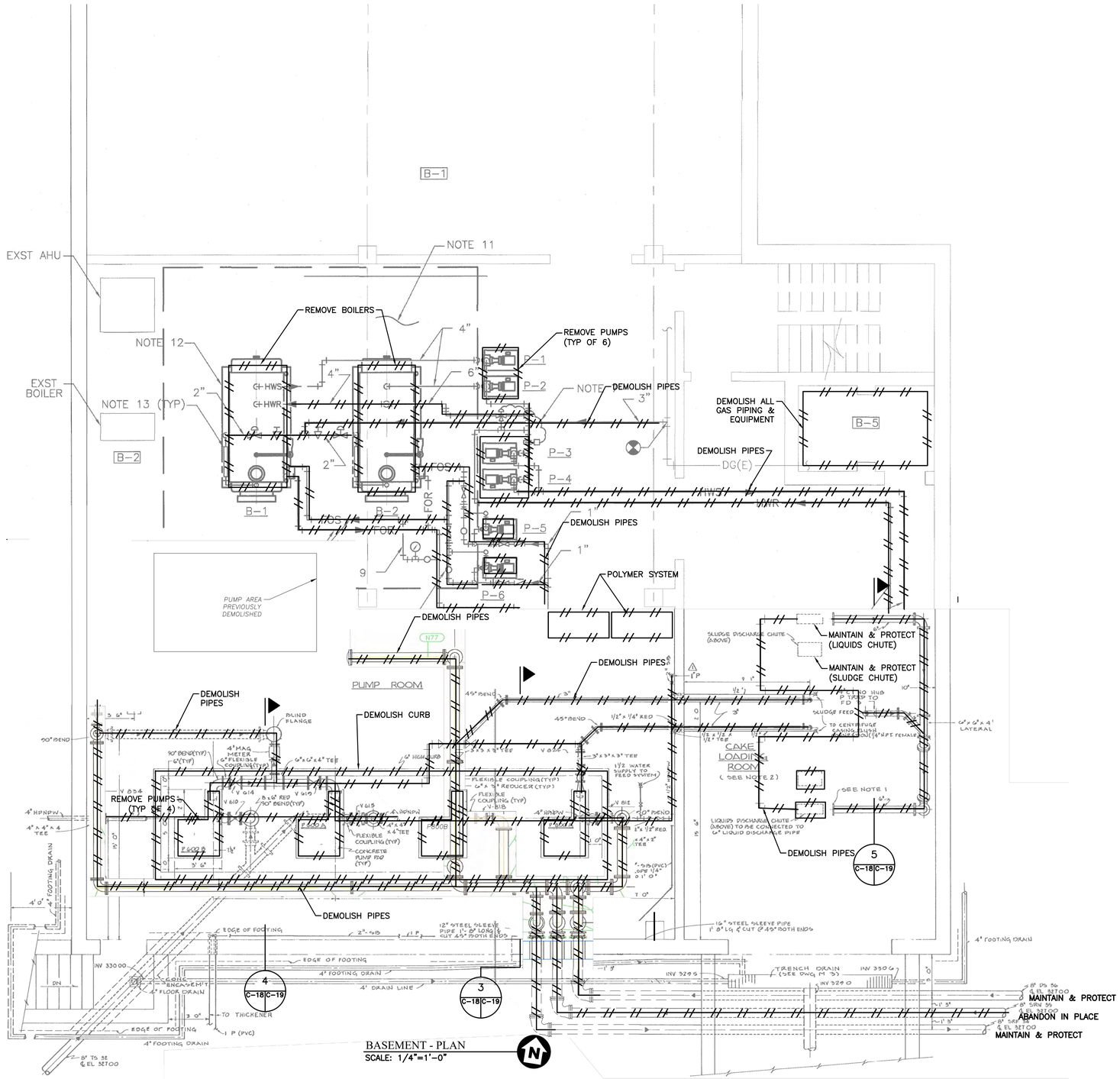

BASEMENT - PLAN
SCALE: 1/4"=1'-0"

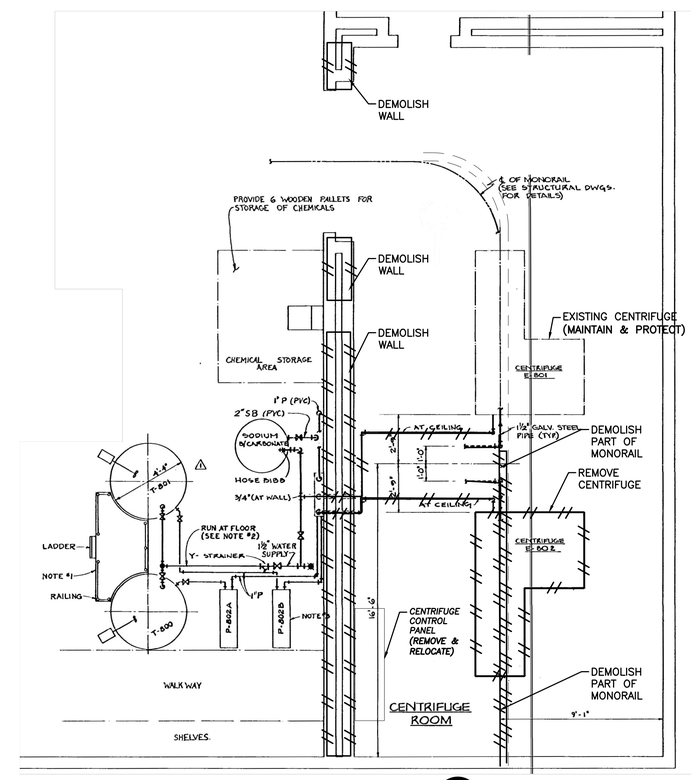

FIRST FLOOR - PARTIAL PLAN
SCALE: 1/4"=1'-0"

IF THIS DRAWING IS A REDUCTION GRAPHIC SCALE MUST BE USED

0 2' 4' 8'

SCALE: 1/4" = 1'-0"

NO.	SHEET REVISION	BY	DATE	NO.	SHEET REVISION	BY	DATE

COMMONWEALTH OF VIRGINIA
JASON A. CLARK
Lic. No. 33605
4/29/2022
PROFESSIONAL ENGINEER

WWA ENGINEERS SURVEYORS PLANNERS ASSOCIATES
PO Box 4119 Lynchburg, VA 24502 Phone: 434.316.6080
968 Olympia Drive, Suite 1 Charlottesville, VA 22911 Phone: 434.984.2700
www.wwassociates.net

DESIGNED BY: HFW	PROJECT: WASTEWATER TREATMENT PLANT IMPROVEMENTS TOWN OF CULPEPER, VIRGINIA		SET REV. NO. –
DRAWN BY: DJC & WAM	TITLE: SLUDGE PROCESSING BUILDING EXISTING CONDITIONS & DEMOLITION PLAN		DRAWING NUMBER: C-18
DIHR BY: HFW			
WWA NUMBER: 221028.00	FILE NAME: 102800L_EX5.dwg	DISCIPLINE: CIVIL	SCALE: H: AS SHOWN V: N/A	DATE: 4/29/22

M:\221028 Town of Culpeper WWTP Improvements\221028.00 Design\102800L_EX5.dwg

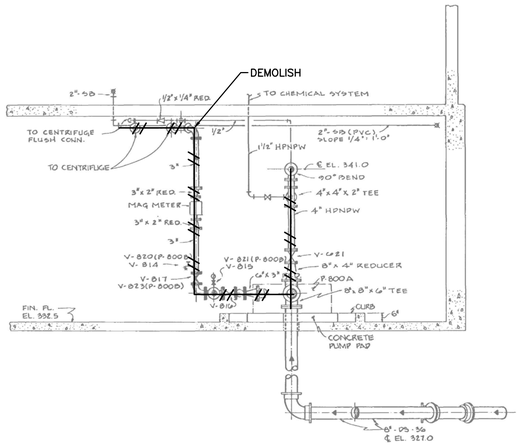

SECTION 3 (2-17-C-19)
SCALE: 3/8"=1'-0"

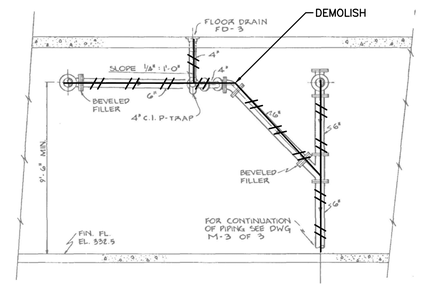

SECTION 5 (2-17-C-19)
SCALE: 3/8"=1'-0"

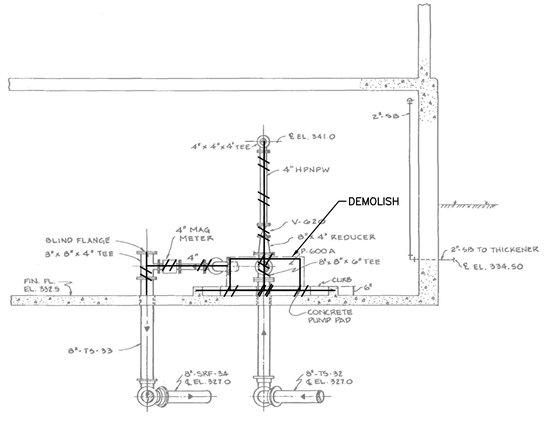

SECTION 4 (2-17-C-19)
SCALE: 3/8"=1'-0"

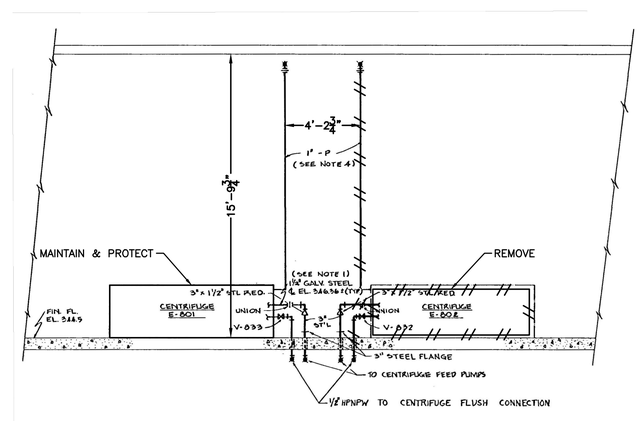

FIRST FLOOR (CENTRIFUGE ROOM)
SCALE: 1/4"=1'

IF THIS DRAWING IS A REDUCTION GRAPHIC SCALE MUST BE USED

0 2' 4' 8'

SCALE: 1/4" = 1'-0"

NO.	SHEET REVISION	BY	DATE	NO.	SHEET REVISION	BY	DATE

COMMONWEALTH OF VIRGINIA
JASON A. CLARK
Lic. No. 33605
4/29/2022
PROFESSIONAL ENGINEER

WWA ASSOCIATES
ENGINEERS SURVEYORS PLANNERS
PO Box 4119, Lynchburg, VA 24502, Phone: 434.316.6080
968 Olympia Drive, Suite 1, Charlottesville, VA 22911, Phone: 434.984.2700
www.wwassociates.net

DESIGNED BY: JAC	PROJECT: WASTEWATER TREATMENT PLANT IMPROVEMENTS TOWN OF CULPEPER, VIRGINIA		SET REV. NO. —
DRAWN BY: DJC	TITLE: SLUDGE PROCESSING BUILDING EXISTING CONDITIONS & DEMOLITION SECTIONS		DRAWING NUMBER: C-19
DIHR BY: HFW			
WWA NUMBER: 221028.00	FILE NAME: 102800L_EX6.dwg	DISCIPLINE: CIVIL	SCALE: H: AS SHOWN V: N/A	DATE: 4/29/22

M:\221028 Town of Culpeper WWTP Improvements\221028.00 Design\102800L_EX6.dwg

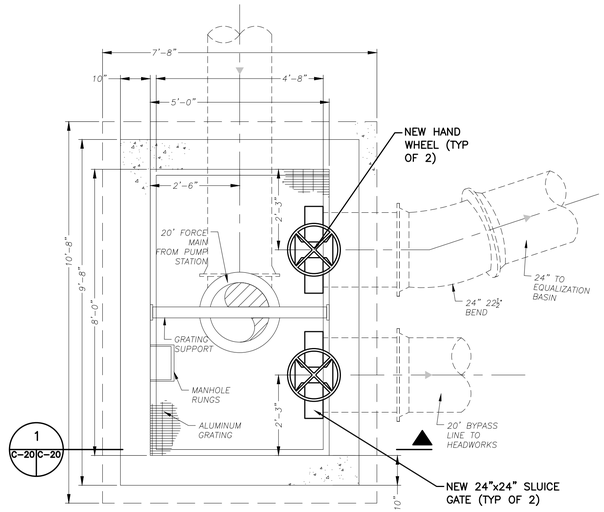

PLAN-EQ SPLITTER BOX
SCALE: 1/2"=1'-0"

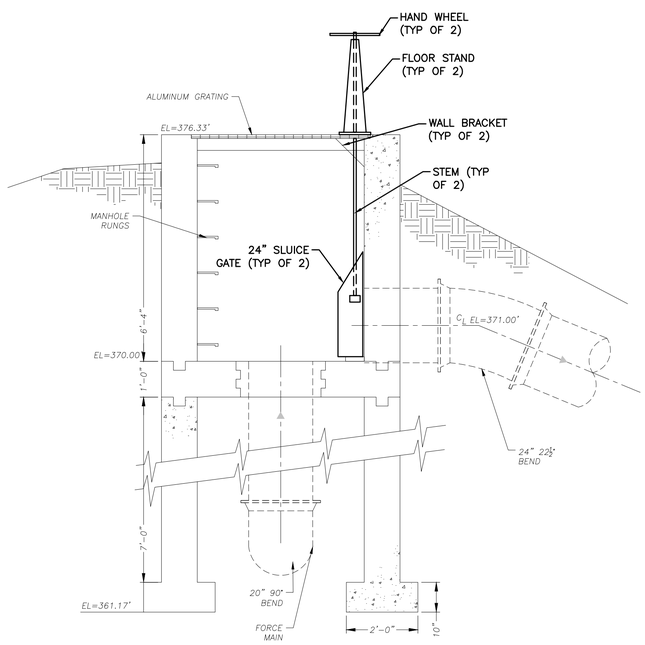

SECTION-EQ SPLITTER BOX
SCALE: 1/2"=1'-0"
1
C-20 C-20

IF THIS DRAWING IS A REDUCTION GRAPHIC SCALE MUST BE USED

0 1' 2' 4'

SCALE: 1/2" = 1'-0"

NO.	SHEET REVISION	BY	DATE

NO.	SHEET REVISION	BY	DATE

COMMONWEALTH OF VIRGINIA
JASON A. CLARK
Lic. No. 33605
4/29/2022
PROFESSIONAL ENGINEER

WWA ASSOCIATES
ENGINEERS SURVEYORS PLANNERS
PO Box 4119 Lynchburg, VA 24502 Phone: 434.316.6080
968 Olympia Drive, Suite 1 Charlottesville, VA 22911 Phone: 434.984.2700
www.wwaassociates.net

DESIGNED BY: HFW	PROJECT: WASTEWATER TREATMENT PLANT IMPROVEMENTS TOWN OF CULPEPER, VIRGINIA		SET REV. NO. —
DRAWN BY: WAM	TITLE: EQ SPLITTER BOX NEW WORK PLAN & SECTION		DRAWING NUMBER: C-20
DIHR BY: HFW			
WWA NUMBER: 221028.00	FILE NAME: 102800L_DET22.dwg	DISCIPLINE: CIVIL	SCALE: H: AS SHOWN V: N/A	DATE: 4/29/22

M:\221028 Town of Culpeper WWTP Improvements\221028.00 Design\102800L_DET22.dwg

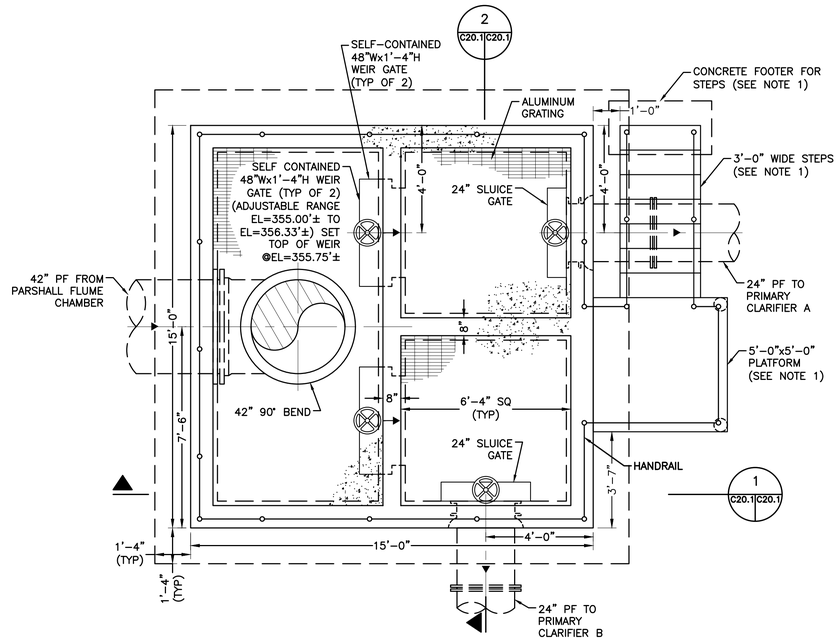

PLAN-PRIMARY CLARIFIER SPLITTER BOX
SCALE: 3/8"=1'-0"

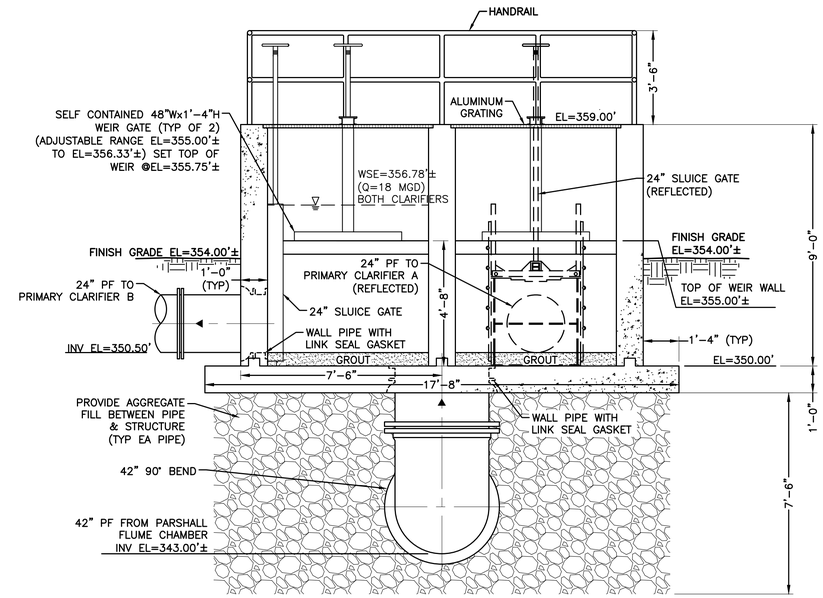

SECTION
SCALE: 3/8"=1'-0"
2
C20.1 C20.1

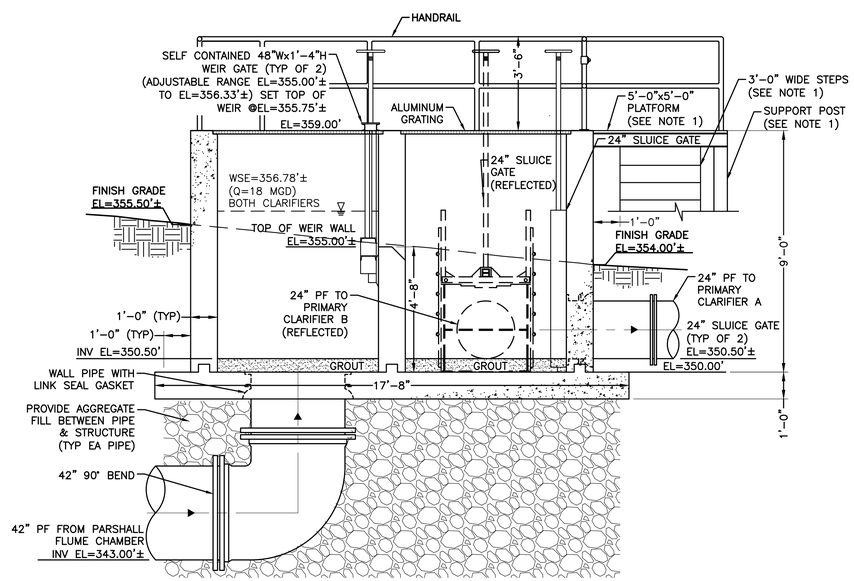

SECTION
SCALE: 3/8"=1'-0"
1
C20.1 C20.1

NOTES:

1. PLATFORM, STEPS, AND RELATED FOUNDATIONS ARE DELEGATED DESIGN. SEE PROJECT SPECIFICATION SECTION 05500.

IF THIS DRAWING IS A REDUCTION GRAPHIC SCALE MUST BE USED

0 1' 3' 6'

SCALE: 3/8" = 1'-0"

NO.	SHEET REVISION	BY	DATE

NO.	SHEET REVISION	BY	DATE

COMMONWEALTH OF VIRGINIA
JASON A. CLARK
Lic. No. 33605
4/29/2022
PROFESSIONAL ENGINEER

WW ASSOCIATES
ENGINEERS SURVEYORS PLANNERS
PO Box 4119, Lynchburg, VA 24502, Phone: 434.316.6080
968 Olympia Drive, Suite 1, Charlottesville, VA 22911, Phone: 434.984.2700
www.wwassociates.net

DESIGNED BY: HFW	PROJECT: WASTEWATER TREATMENT PLANT IMPROVEMENTS TOWN OF CULPEPER, VIRGINIA			SET REV. NO. —
DRAWN BY: WAM	TITLE: PRIMARY CLARIFIER SPLITTER BOX NEW WORK PLAN & SECTION			DRAWING NUMBER: C-20.1
DIHR BY: HFW				
WWA NUMBER: 221028.00	FILE NAME: 102800L_DET24.dwg	DISCIPLINE: CIVIL	SCALE: H: AS SHOWN V: N/A	DATE: 4/29/22

M:\221028 Town of Culpeper WWTP Improvements\221028.00 Design\102800L_DET24.dwg

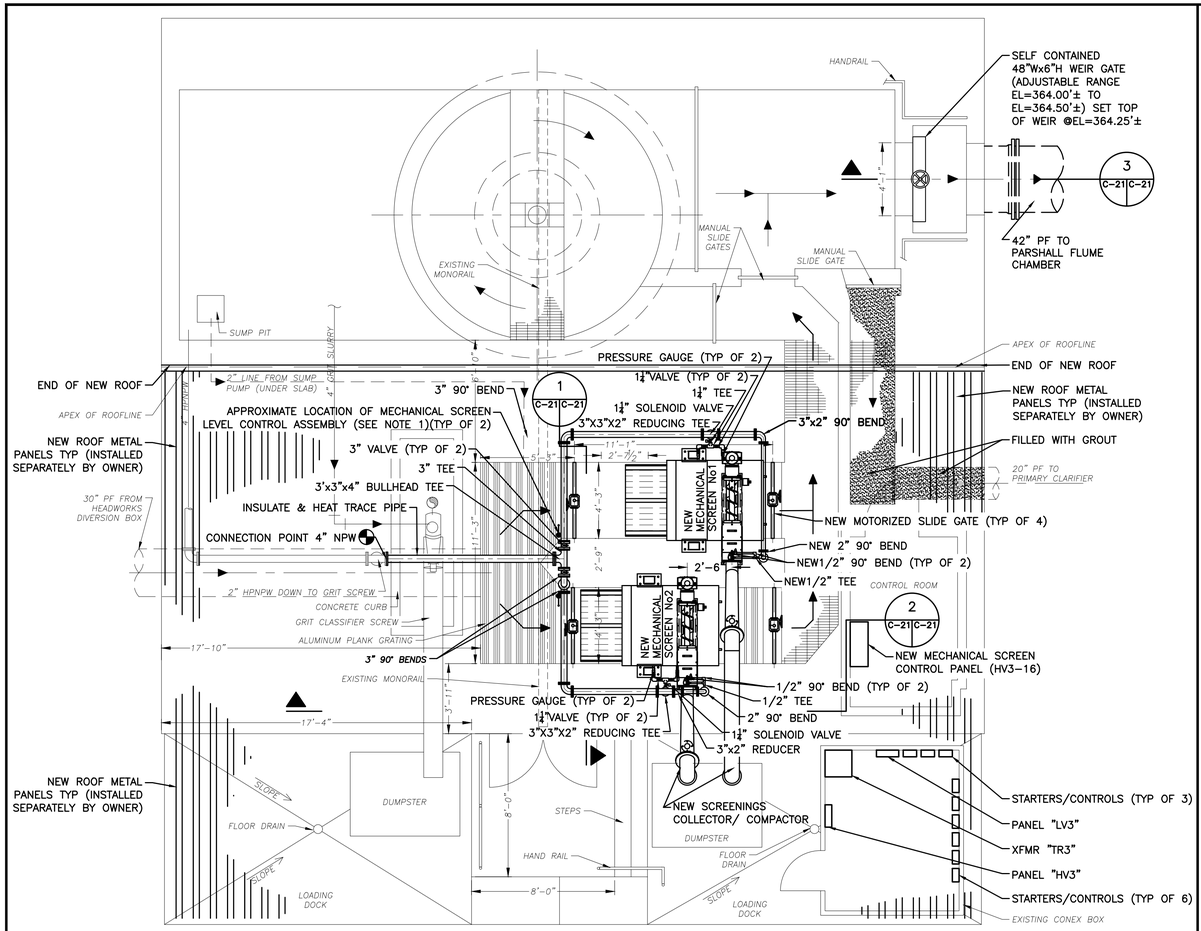

PLAN
SCALE: 1/4"=1'-0"

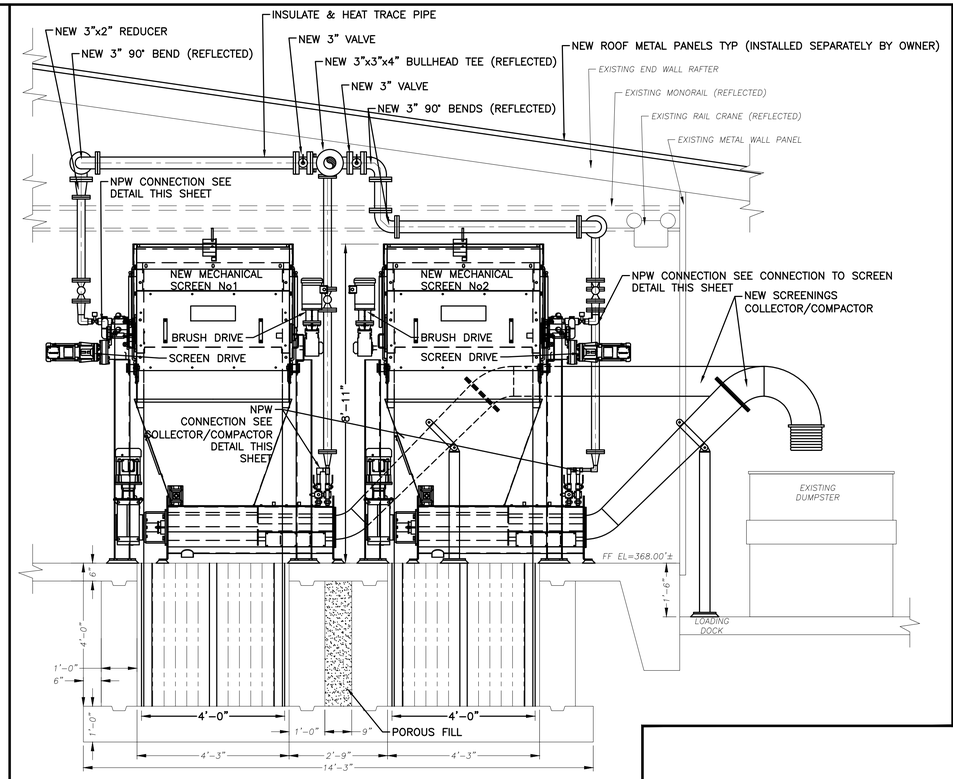

SECTION 1 (C-21|C-21)
SCALE: 1/2"=1'-0"

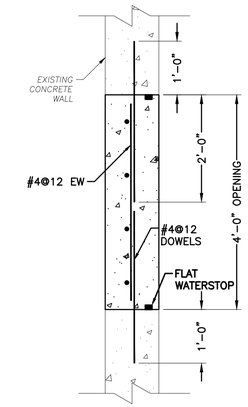

DETAIL (WALL OPENING)
SCALE: 3/4"=1'-0"

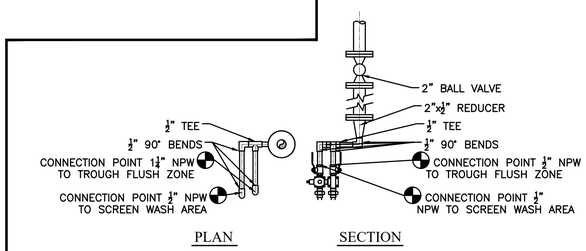

DETAIL (NPW CONNECTION TO COLLECTOR/COMPACTER)
SCALE: 3/4"=1'-0"

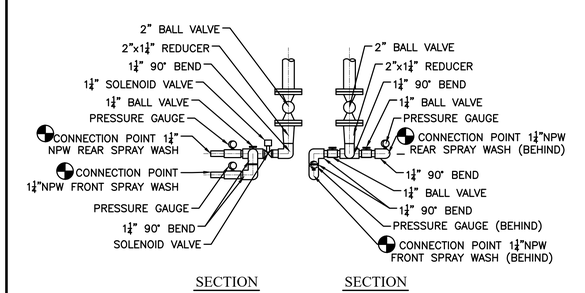

DETAIL (NPW CONNECTION TO SCREENS)
SCALE: 3/4"=1'-0"

NOTES:

1. MECHANICAL SCREEN MANUFACTURER SHALL PROVIDE LEVEL CONTROL ASSEMBLY. MOUNT ASSEMBLY ON TOP OF CHANNEL TO PREVENT CONFLICT WITH MECHANICAL SCREEN ROTATION.

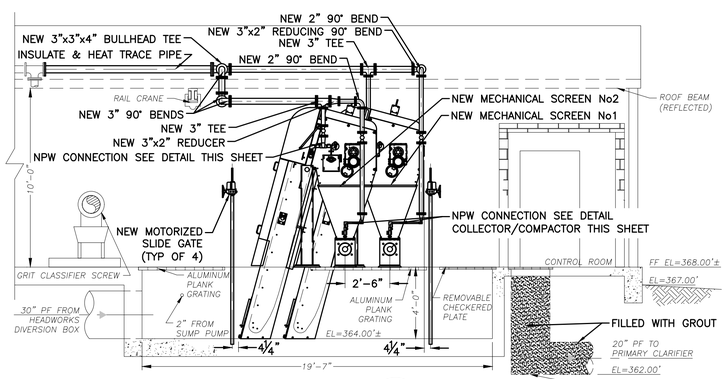

SECTION 2 (C-21|C-21)
SCALE: 1/4"=1'-0"

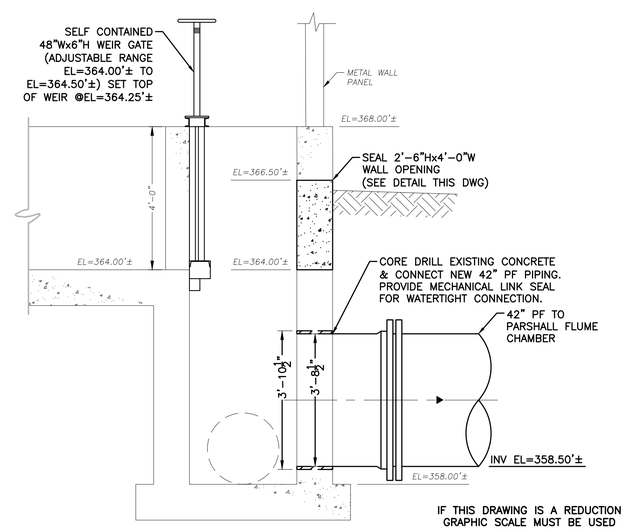

SECTION 3 (C-21|C-21)
SCALE: 1/2"=1'-0"

IF THIS DRAWING IS A REDUCTION GRAPHIC SCALE MUST BE USED
0 2' 4' 8'
SCALE: 1/4" = 1'-0"

IF THIS DRAWING IS A REDUCTION GRAPHIC SCALE MUST BE USED
0 1' 2' 4'
SCALE: 1/2" = 1'-0"

IF THIS DRAWING IS A REDUCTION GRAPHIC SCALE MUST BE USED
0 6" 1'-0" 2'-0"
SCALE: 3/4" = 1'-0"

NO.	SHEET REVISION	BY	DATE

NO.	SHEET REVISION	BY	DATE

COMMONWEALTH OF VIRGINIA
JASON A. CLARK
Lic. No. 33605
4/29/2022
PROFESSIONAL ENGINEER

WW ASSOCIATES
ENGINEERS SURVEYORS PLANNERS
PO Box 4119 Lynchburg, VA 24502 Phone: 434.316.6080
968 Olympia Drive, Suite 1 Charlottesville, VA 22911 Phone: 434.984.2700
www.wwassociates.net

DESIGNED BY: HFW	PROJECT: WASTEWATER TREATMENT PLANT IMPROVEMENTS TOWN OF CULPEPER, VIRGINIA		SET REV. NO. —
DRAWN BY: WAM	TITLE: HEADWORKS BUILDING (BUILDING #3) NEW WORK PLAN & SECTION		DRAWING NUMBER: C-21
DIHR BY: HFW			
WWA NUMBER: 221028.00	FILE NAME: 102800L_DET23.dwg	DISCIPLINE: CIVIL	SCALE: H: AS SHOWN V: N/A
			DATE: 4/29/22

M:\221028 Town of Culpeper WWTP Improvements\221028.00 Design\102800L_DET23.dwg

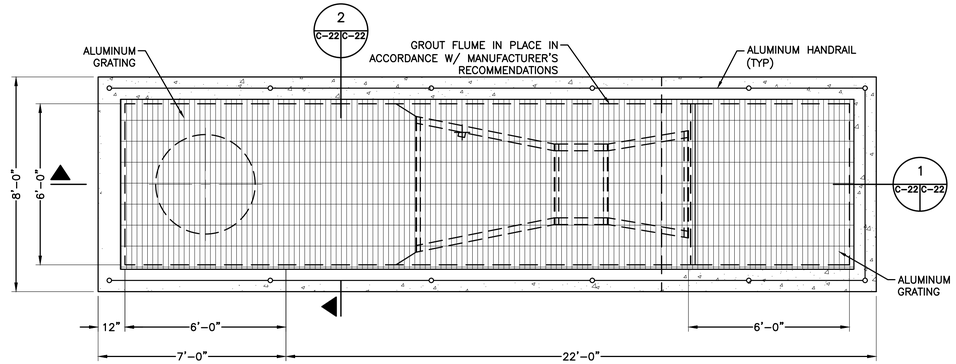

PLAN-TOP FLUME
SCALE: 3/8"=1'-0"

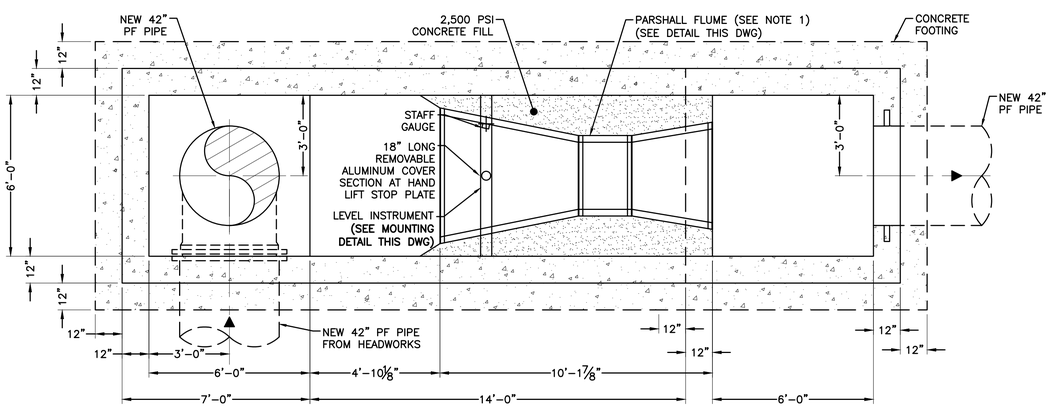

PLAN-BOTTOM FLUME
SCALE: 3/8"=1'-0"

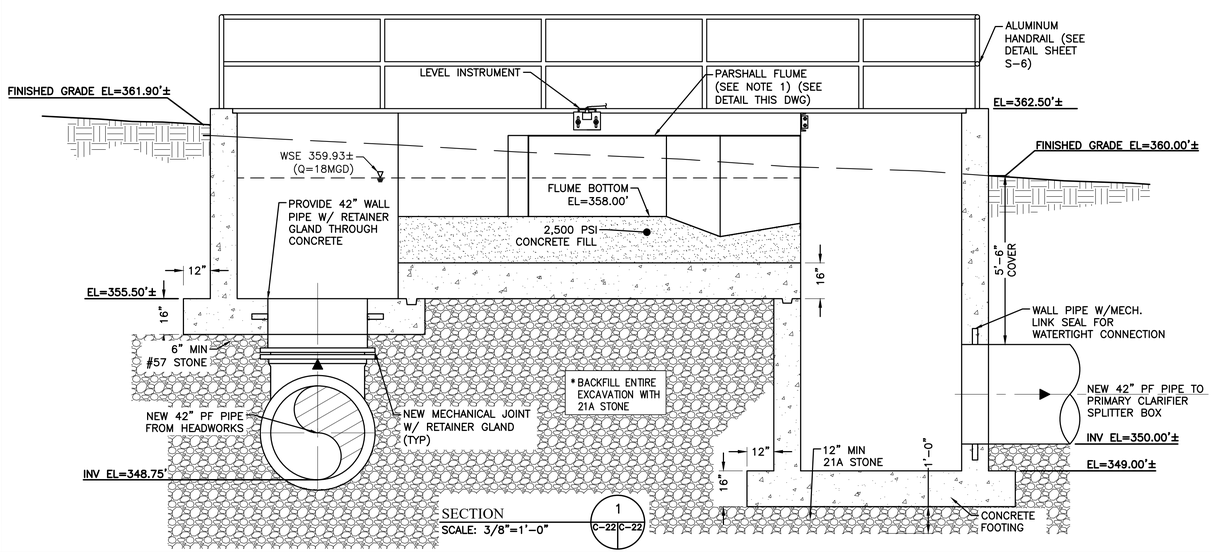

SECTION
SCALE: 3/8"=1'-0"
1
C-22 C-22

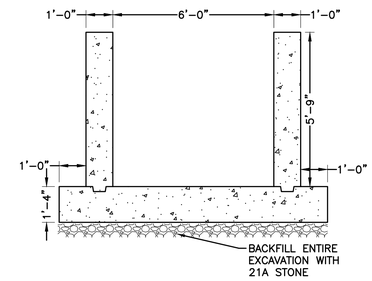

SECTION
SCALE: 3/8"=1'-0"
2
C-22 C-22

NOTES:

1. PROVIDE PARSHALL FLUME INSERT WITH 30" THROAT WIDTH PER SECTION 13300.
2. PROVIDE 4-20MA TWISTED SHIELDED PAIR WIRING FROM LEVEL INSTRUMENT TO THE FLOW METER TRANSMITTER. PER SECTION 13300.

IF THIS DRAWING IS A REDUCTION GRAPHIC SCALE MUST BE USED

0 1' 3' 6'

SCALE: 3/8" = 1'-0"

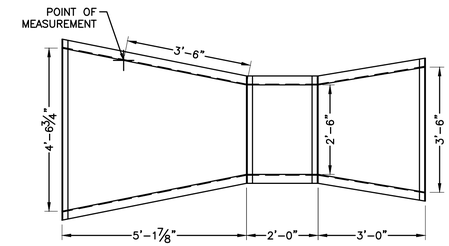

PLAN VIEW

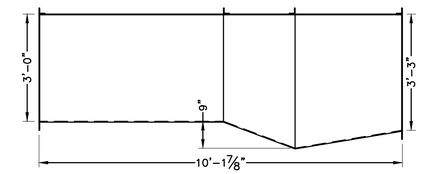

RIGHT ELEVATION

PARSHALL FLUME, SIZE 30 INCH
SCALE: 1/2"=1'-0"

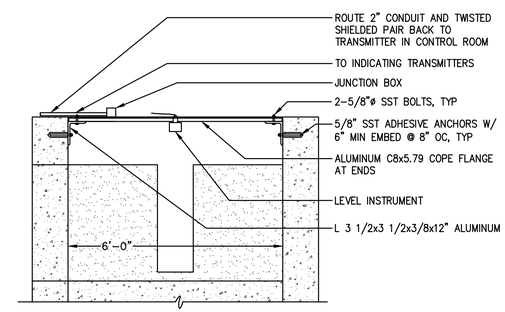

DETAIL-LEVEL INSTRUMENT MOUNTING
SCALE: 1/2"=1'-0"

IF THIS DRAWING IS A REDUCTION GRAPHIC SCALE MUST BE USED

0 1' 2' 4'

SCALE: 1/2" = 1'-0"

NO.	SHEET REVISION	BY	DATE

NO.	SHEET REVISION	BY	DATE

COMMONWEALTH OF VIRGINIA
JASON A. CLARK
Lic. No. 33605
4/29/2022
PROFESSIONAL ENGINEER

WW ASSOCIATES
ENGINEERS SURVEYORS PLANNERS
PO Box 4119 Lynchburg, VA 24502 Phone: 434.316.6080
968 Olympia Drive, Suite 1 Charlottesville, VA 22911 Phone: 434.984.2700
www.wwassociates.net

DESIGNED BY: JAC	PROJECT: WASTEWATER TREATMENT PLANT IMPROVEMENTS TOWN OF CULPEPER, VIRGINIA		SET REV. NO. —
DRAWN BY: DJC	TITLE: PARSHALL FLUME CHAMBER NEW WORK PLANS & SECTIONS		DRAWING NUMBER: C-22
DIHR BY: HFW			
WWA NUMBER: 221028.00	FILE NAME: 102800L_DET6.dwg	DISCIPLINE: CIVIL	SCALE: H: AS SHOWN V: N/A	DATE: 4/29/22

M:\221028 Town of Culpeper WWTP Improvements\221028.00 Design\102800L_DET6.dwg

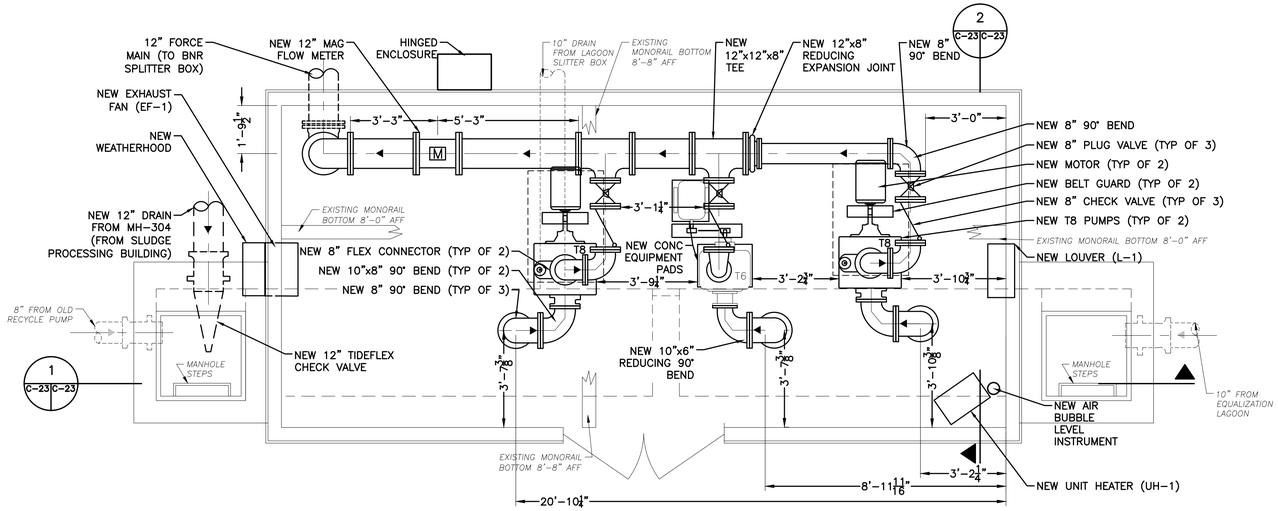

PLAN
SCALE: 3/8"=1'

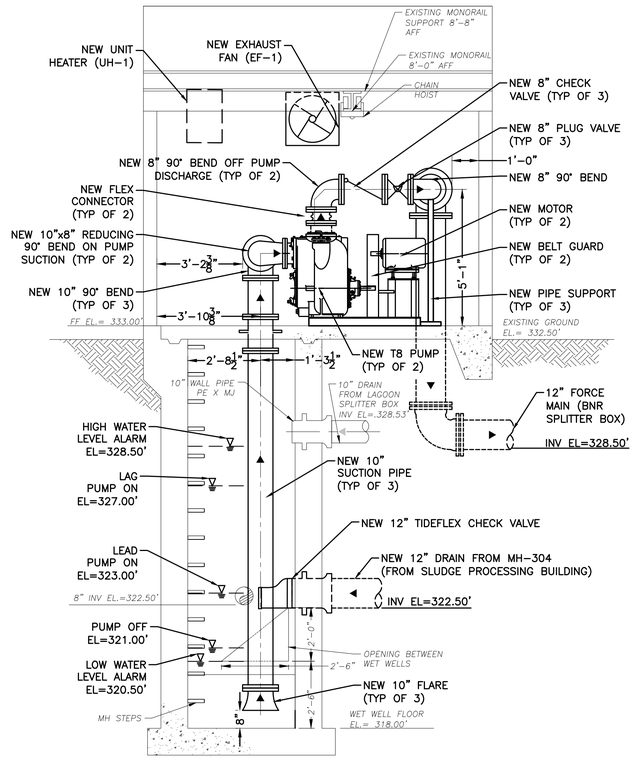

SECTION
SCALE: 3/8"=1'

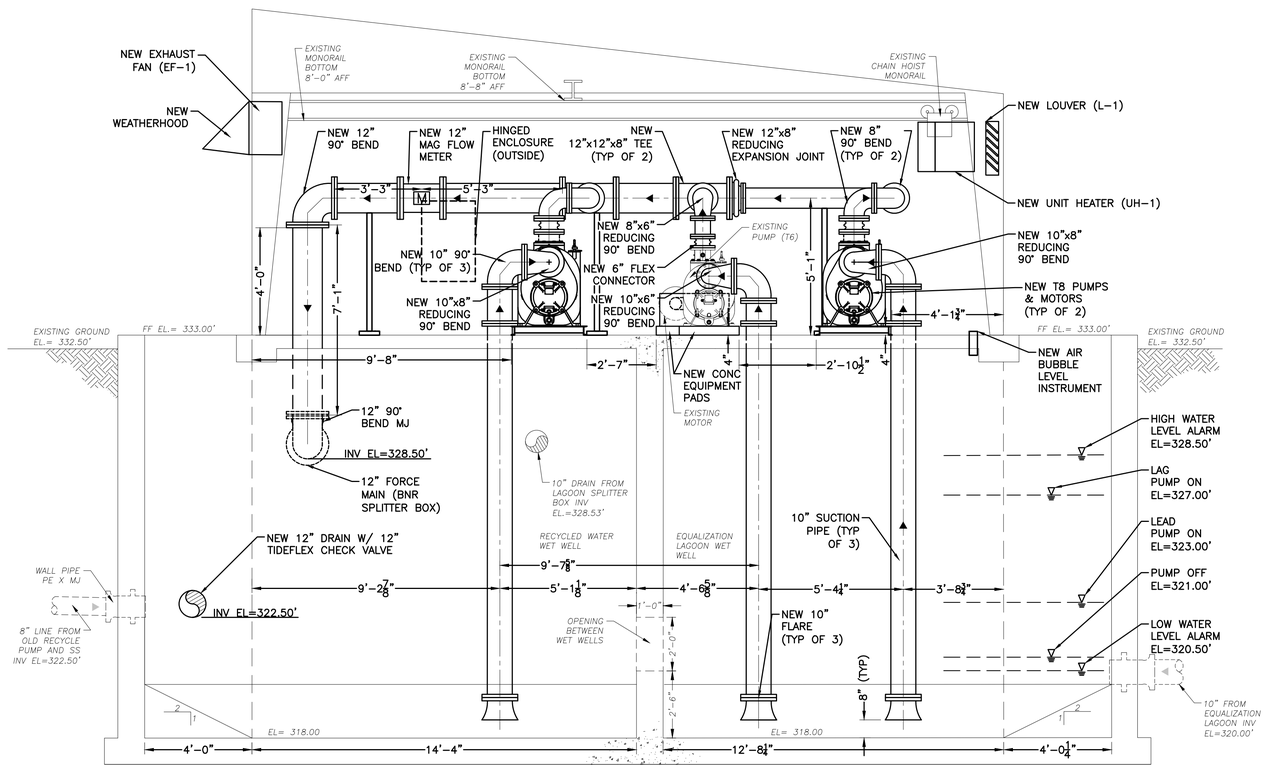

SECTION
SCALE: 3/8"=1'

EXHAUST FANS	
TAG NUMBER	EF-1
MANUFACTURER	GREENHECK OR APPROVED EQUAL
MANUFACTURER MODEL NUMBER	SE2-16-435-B6
OPENING SIZE	23.25" W x 23.25" H (MATCH EXISTING DIMENSIONS)
DRIVE TYPE	DIRECT
FLOW RATE	1,732 CFM
STATIC PRESSURE	0.20 IN. W.G.
MOTOR SIZE	1/6 HP
INSTALLATION HEIGHT	120 V/1 PH/60 HZ
*ELECTRICAL SERVICE	8" BELOW CEILING
REMARKS	FIELD INSTALLED ELECTRICAL DISCONNECT, WALL HOUSING W/HOUSING GUARD, GRAVITY DAMPER, WEATHERHOOD W/BIRD SCREEN, AND SPEED CONTROL. ALL FAN PARTS AND FASTENERS SHALL RECEIVE CORROSION-RESISTANT "HI-PRO Z" POLYESTER COATING SYSTEM. *VERIFY WITH ELECTRICAL DRAWINGS.

LOUVERS	
TAG NUMBER	L-1
MANUFACTURER	RUSKIN OR APPROVED EQUAL
MANUFACTURER MODEL NUMBER	CD-50
SIZE	12" W x 24" H (MATCH EXISTING DIMENSIONS)
FLOW RATE	1,732 CFM
STATIC PRESSURE	0.09 IN. W.G.
FREE AREA	1.20 SF
AIR VELOCITY	1,443 FT/MIN
CONSTRUCTION	EXTRUDED ALUMINUM
*ELECTRICAL SERVICE	120 V/1 PH/60 HZ
REMARKS	LOW LEAKAGE CONTROL DAMPER W/ALUMINUM AIRFLOW BLADES. DAMPER SPRING RETURN TO CLOSED POSITION, 120 V 2-POSITION DAMPER MOTOR, MOUNTED IN AIRSTREAM, BIRD AND INSECT SCREEN, AND CLEAR ANODIZED FINISH. *VERIFY WITH ELECTRICAL DRAWINGS.

UNIT HEATERS	
TAG NUMBER	UH-1
MANUFACTURER	CHROMALOX OR APPROVED EQUAL
MANUFACTURER MODEL NUMBER	HD3D-750
AIR FLOW	590 CFM
THROW	13 FT
HEAT CAPACITY	7.5 KW
INSTALLATION HEIGHT	8" BELOW CEILING
*ELECTRICAL SERVICE	208 V/3 PH/60 HZ
REMARKS	FIELD INSTALLED ELECTRICAL DISCONNECT KIT, MODEL DS-50HD, FIELD INSTALLED, WALL MOUNTED 120 V THERMOSTAT, NEMA 4X TYPE WCRT-100, AND WALL MOUNTING BRACKET, MODEL USB-1. ALL UNIT HEATER PARTS AND FASTENERS SHALL BE CORROSION-RESISTANT. *VERIFY WITH ELECTRICAL DRAWINGS.

DRAIN PUMP STATION PUMP LEVEL CONTROL SEQUENCE	
CONDITION	ELEVATION
HIGH WATER LEVEL ALARM	328.50
LAG PUMP ON	327.00
LEAD PUMP ON	323.00
PUMP OFF	321.00
LOW WATER LEVEL ALARM	320.50

PUMP SCHEDULE – DRAIN PUMP STATION		
DESIGNATION	PUMP Nos. 1 AND 3	PUMP No. 2
DESCRIPTION	SUCTION-LIFT	SUCTION-LIFT
MANUFACTURER	SEE PROJECT MANUAL	SEE PROJECT MANUAL
MODEL NUMBER	SEE PROJECT MANUAL	SEE PROJECT MANUAL
IMPELLER DIAMETER – IN.	SEE PROJECT MANUAL	SEE PROJECT MANUAL
FLOW CAPACITY – GPM	1,600	1,200
TOTAL DYNAMIC HEAD – FT.	42	38
MOTOR HORSEPOWER	30	40
PUMP SPEED – RPM	SEE PROJECT MANUAL	SEE PROJECT MANUAL

IF THIS DRAWING IS A REDUCTION GRAPHIC SCALE MUST BE USED

0 1' 3' 6'

SCALE: 3/8" = 1'-0"

NO.	SHEET REVISION	BY	DATE

NO.	SHEET REVISION	BY	DATE

COMMONWEALTH OF VIRGINIA
JASON A. CLARK
Lic. No. 33605
4/29/2022
PROFESSIONAL ENGINEER

WWA ENGINEERS SURVEYORS PLANNERS ASSOCIATES
PO Box 4119 Lynchburg, VA 24502 Phone: 434.316.6080
968 Olympia Drive, Suite 1 Charlottesville, VA 22911 Phone: 434.984.2700
www.wwassociates.net

DESIGNED BY: JAC
DRAWN BY: WAM
DIHR BY: HFW
WWA NUMBER: 221028.00

PROJECT: WASTEWATER TREATMENT PLANT IMPROVEMENTS TOWN OF CULPEPER, VIRGINIA

TITLE: DRAIN PUMP STATION (BUILDING #8) NEW WORK PLAN & SECTION

FILE NAME: 102800L_DET7.dwg
DISCIPLINE: CIVIL
SCALE: H: AS SHOWN V: N/A

SET REV. NO.: –
DRAWING NUMBER: C-23
DATE: 4/29/22

M:\221028 Town of Culpeper WWTP Improvements\221028.00 Design\102800L_DET7.dwg

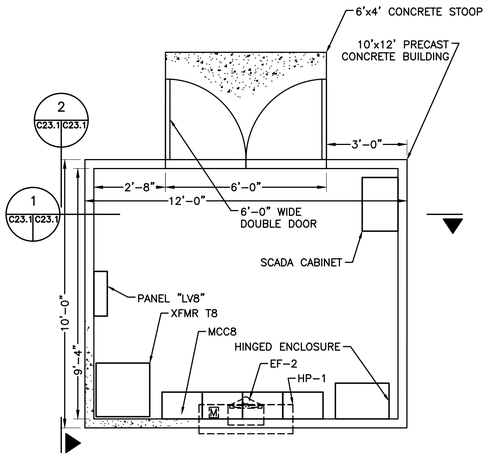

PLAN
SCALE: 3/8"=1'-0"

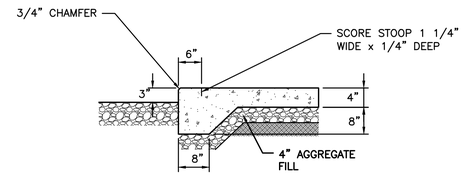

CONCRETE STOOP DETAIL
SCALE: NOT TO SCALE

NOTES:

1. CONCRETE STOOP SHALL BE CONSTRUCTED FROM CAST-IN-PLACE VDOT CLASS A3 GENERAL HYDRAULIC CEMENT CONCRETE AND MEET THE REQUIREMENTS OF VDOT ROAD AND BRIDGE SPECIFICATIONS, SECTION 217.
2. DISTANCE BETWEEN SCORE LINE SHALL NOT EXCEED 5' IN LONGITUDINAL DIRECTION.
3. CONCRETE STOOP SHALL BE BROOM FINISHED.
4. SLOPE ON CONCRETE STOOP SHALL PROMOTE POSITIVE DRAINAGE AWAY FROM BUILDING.
5. 1/2" PREMOLDED EXPANSION FILLER TO BE PLACED BETWEEN CONCRETE STOOP AND BUILDING.
6. REFER TO SITE PLAN DRAWINGS FOR CONCRETE STOOP WIDTHS AND LOCATIONS.
7. CONCRETE STOOP IN FRONT OF BUILDING SHALL BE CONSTRUCTED PER THIS DETAIL. STOOP SHALL BE FLUSH WITH BUILDING FINISHED FLOOR ELEVATION AND SLOPE TO DRAIN AWAY FROM BUILDING AS SHOWN ON SITE PLAN DRAWINGS.

EXHAUST FANS	
TAG NUMBER	EF-2
MANUFACTURER	GREENHECK OR APPROVED EQUAL
MANUFACTURER MODEL NUMBER	SE1-14-440-C8
OPENING SIZE	16.5" W x 16.5" H
DRIVE TYPE	DIRECT
FLOW RATE	408 CFM
STATIC PRESSURE	0.25 IN. W.G.
MOTOR SIZE	1/8 HP
*ELECTRICAL SERVICE	120 V/1 PH/60 HZ
INSTALLATION HEIGHT	8" BELOW CEILING
REMARKS	FIELD INSTALLED ELECTRICAL DISCONNECT, WALL HOUSING W/HOUSING GUARD, GRAVITY DAMPER, WEATHERHOOD W/BIRD SCREEN, AND SPEED CONTROL. *VERIFY WITH ELECTRICAL DRAWINGS.

HEAT PUMPS	
TAG NUMBER	HP-1
TYPE	THROUGH-WALL (COOLING WITH HEAT PUMP)
MANUFACTURER	FRIEDRICH OR APPROVED EQUAL
MODEL NUMBER	"ZONAIRE" PZH07K3SB
OPENING SIZE	16.25" W x 42.25" H
*ELECTRICAL SERVICE	208 V/1 PH/60 HZ
EFFICIENCY RATING	12.0 EER
RATED COOLING CAPACITY	6,800 BTU/hr
RATED HEATING CAPACITY	6,300 BTU/hr
INDOOR AIR FLOW RATE	335 CFM
INSTALLATION HEIGHT	10" ABOVE FINISHED FLOOR
REMARKS	WIRED WALL-MOUNT THERMOSTAT/CONTROLLER, WALL SLEEVE, ARCHITECTURAL WALL GRILLE, SUBBASE. INSTALL UNIT FLUSH WITH EXTERIOR WALL. *VERIFY WITH ELECTRICAL DRAWINGS.

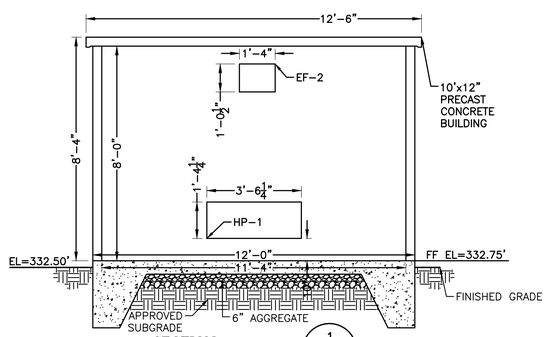

SECTION 1 (C23.1 | C23.1)
SCALE: 3/8"=1'-0"

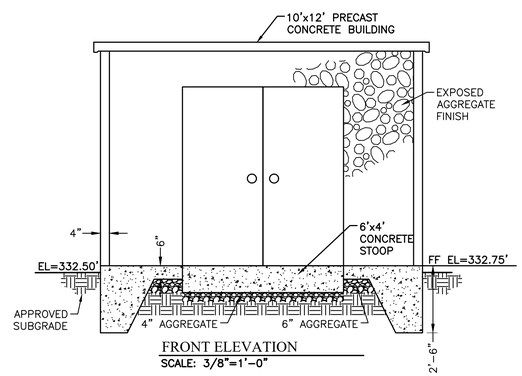

FRONT ELEVATION
SCALE: 3/8"=1'-0"

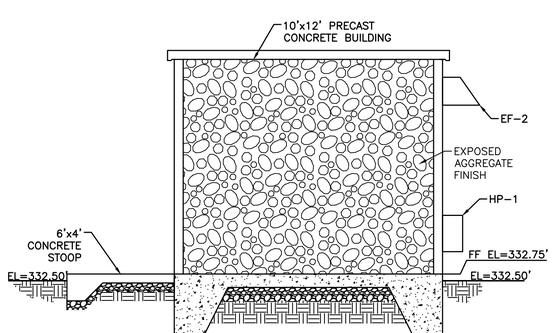

SECTION 2 (C23.1 | C23.1)
SCALE: 3/8"=1'-0"

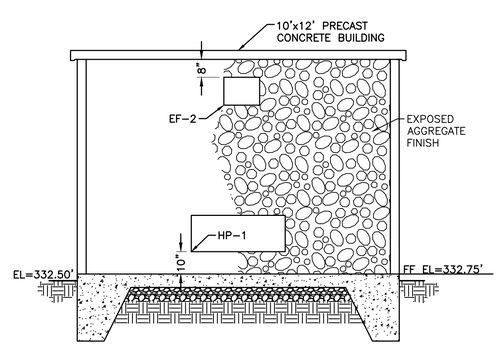

REAR ELEVATION
SCALE: 3/8"=1'-0"

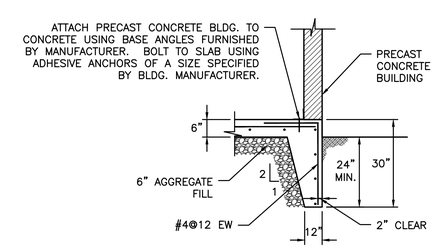

BUILDING FOUNDATION DETAIL
SCALE: NOT TO SCALE

IF THIS DRAWING IS A REDUCTION GRAPHIC SCALE MUST BE USED
0 6" 1'-0" 2'-0"
SCALE: 1" = 1'-0"

M:\221028 Town of Culpeper WWTP Improvements\221028.00 Design\102800L_DET30.dwg

NO.	SHEET REVISION	BY	DATE

NO.	SHEET REVISION	BY	DATE

COMMONWEALTH OF VIRGINIA
JASON A. CLARK
Lic. No. 33605
4/29/2022
PROFESSIONAL ENGINEER

WW ASSOCIATES
ENGINEERS SURVEYORS PLANNERS
PO Box 4119, Lynchburg, VA 24502, Phone: 434.316.6080
968 Olympia Drive, Suite 1, Charlottesville, VA 22911, Phone: 434.984.2700
www.wwassociates.net

DESIGNED BY: JAC	PROJECT: WASTEWATER TREATMENT PLANT IMPROVEMENTS TOWN OF CULPEPER, VIRGINIA		SET REV. NO. —
DRAWN BY: WAM	TITLE: ELECTRICAL BUILDING FOR DRAIN PUMP STATION NEW WORK PLAN & SECTIONS		DRAWING NUMBER: C-23.1
DIHR BY: HFW			
WWA NUMBER: 221028.00	FILE NAME: 102800L_DET30.dwg	DISCIPLINE: CIVIL	SCALE: H: AS SHOWN V: N/A	DATE: 4/29/22

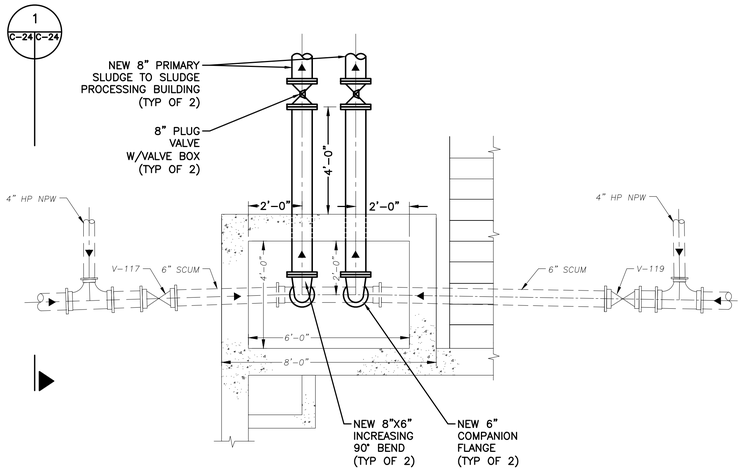

PLAN
SCALE: 3/8"=1'

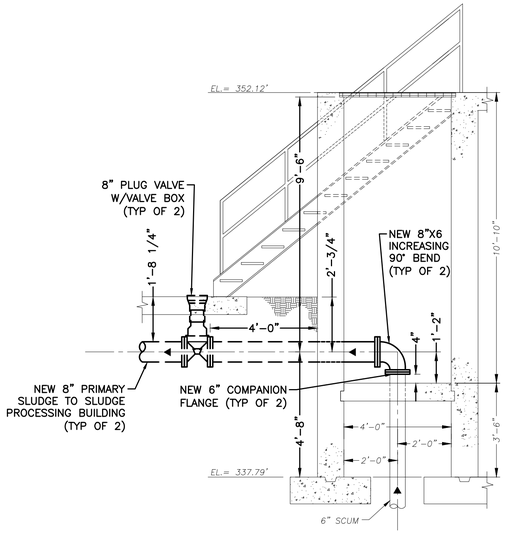

SECTION
SCALE: 3/8"=1'
1
C-24 C-24

IF THIS DRAWING IS A REDUCTION
GRAPHIC SCALE MUST BE USED

0 1' 3' 6'

SCALE: 3/8" = 1'-0"

M:\221028 Town of Culpeper WWTP Improvements\221028.00 Design\102800L_DET4.dwg

NO.	SHEET REVISION	BY	DATE

NO.	SHEET REVISION	BY	DATE

COMMONWEALTH OF VIRGINIA
JASON A. CLARK
Lic. No. 33605
4/29/2022
PROFESSIONAL ENGINEER

WWA ASSOCIATES
ENGINEERS SURVEYORS PLANNERS
PO Box 4119 Lynchburg, VA 24502 Phone: 434.316.6080
968 Olympia Drive, Suite 1 Charlottesville, VA 22911 Phone: 434.984.2700
WWW.WWAASSOCIATES.NET

DESIGNED BY: JAC	PROJECT: WASTEWATER TREATMENT PLANT IMPROVEMENTS TOWN OF CULPEPER, VIRGINIA		SET REV. NO. –
DRAWN BY: WAM	TITLE: PRIMARY CLARIFIER SLUDGE STATION NEW WORK PLAN & SECTION		DRAWING NUMBER: C-24
DIHR BY: HFW			
WWA NUMBER: 221028.00	FILE NAME: 102800L_DET4.dwg	DISCIPLINE: CIVIL	SCALE: H: AS SHOWN V: N/A	DATE: 4/29/22

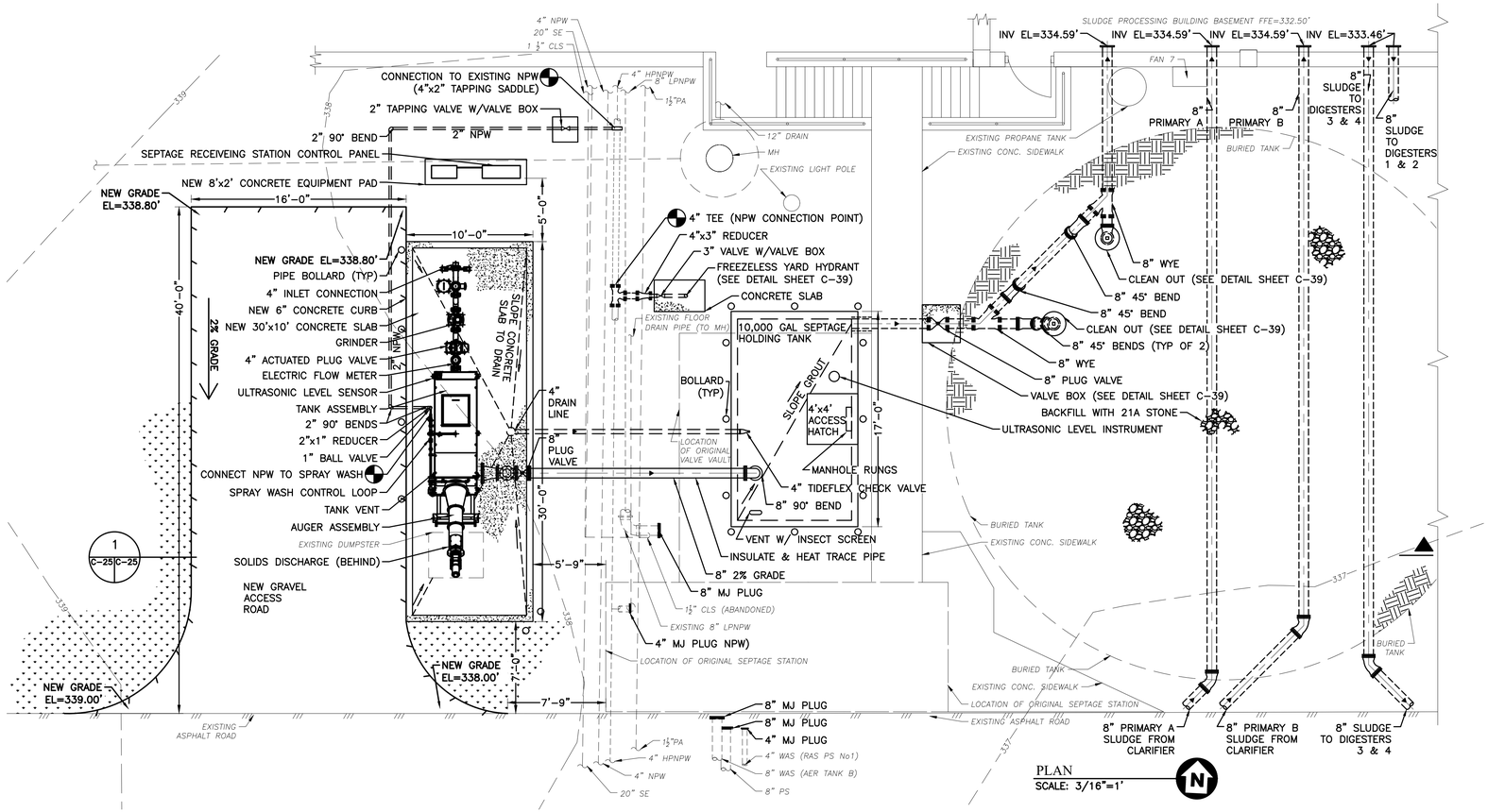

PLAN
SCALE: 3/16"=1'

WASTE SEPTAGE PUMPS PUMP LEVEL CONTROL SEQUENCE	
CONDITION	ELEVATION
HIGH WATER LEVEL ALARM	335.00
PUMP ON	334.00
PUMP OFF	328.00
LOW WATER LEVEL ALARM	327.50

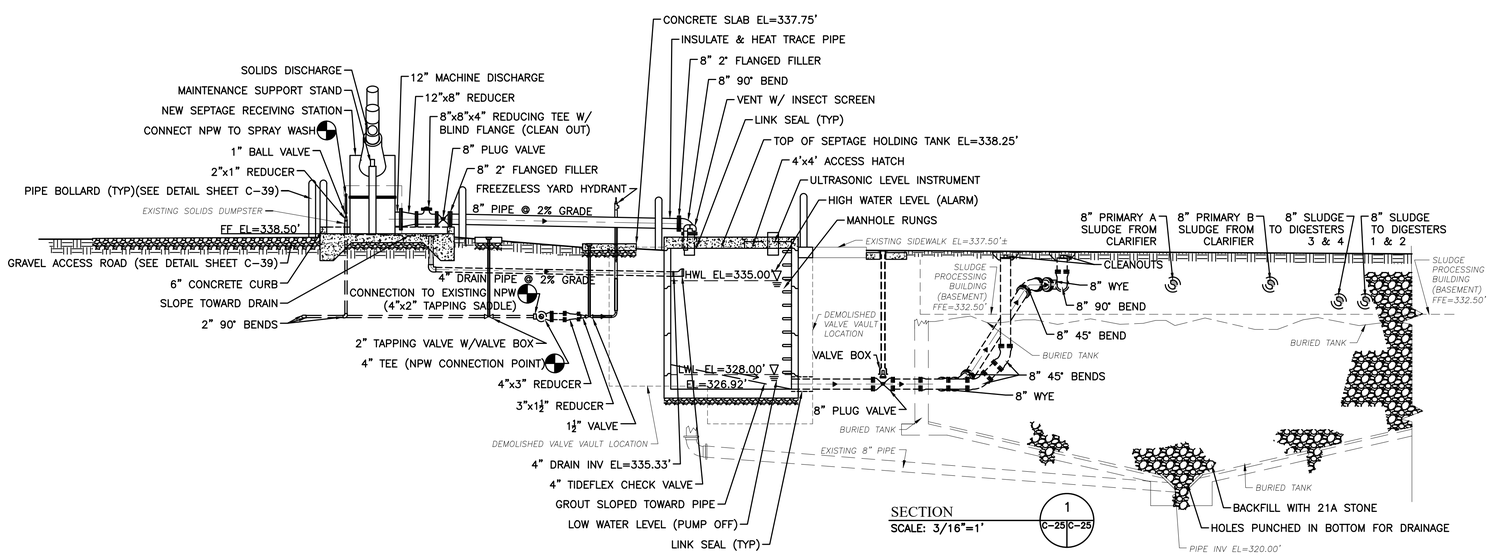

SECTION
SCALE: 3/16"=1'

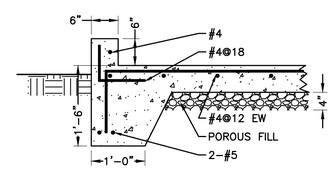

DETAIL-EXTERIOR EQUIPMENT PAD
SCALE: NOT TO SCALE

IF THIS DRAWING IS A REDUCTION GRAPHIC SCALE MUST BE USED

0 5' 10' 15'

SCALE: 3/16" = 1'-0"

NO.	SHEET REVISION	BY	DATE	NO.	SHEET REVISION	BY	DATE

COMMONWEALTH OF VIRGINIA
JASON A. CLARK
Lic. No. 33605
4/29/2022
PROFESSIONAL ENGINEER

WWA ASSOCIATES
ENGINEERS SURVEYORS PLANNERS
PO Box 4119 Lynchburg, VA 24502 Phone: 434.316.6080
968 Olympia Drive, Suite 1 Charlottesville, VA 22911 Phone: 434.984.2700
www.wwassociates.net

DESIGNED BY: JAC	PROJECT: WASTEWATER TREATMENT PLANT IMPROVEMENTS TOWN OF CULPEPER, VIRGINIA		SET REV. NO. —
DRAWN BY: WAM	TITLE: NEW SEPTAGE RECEIVING STATION PLAN & SECTION		DRAWING NUMBER: C-25
DIHR BY: HFW			
WWA NUMBER: 221028.00	FILE NAME: 102800L_DET20.dwg	DISCIPLINE: CIVIL	SCALE: H: AS SHOWN V: N/A
			DATE: 4/29/22

M:\221028 Town of Culpeper WWTP Improvements\221028.00 Design\102800L_DET20.dwg

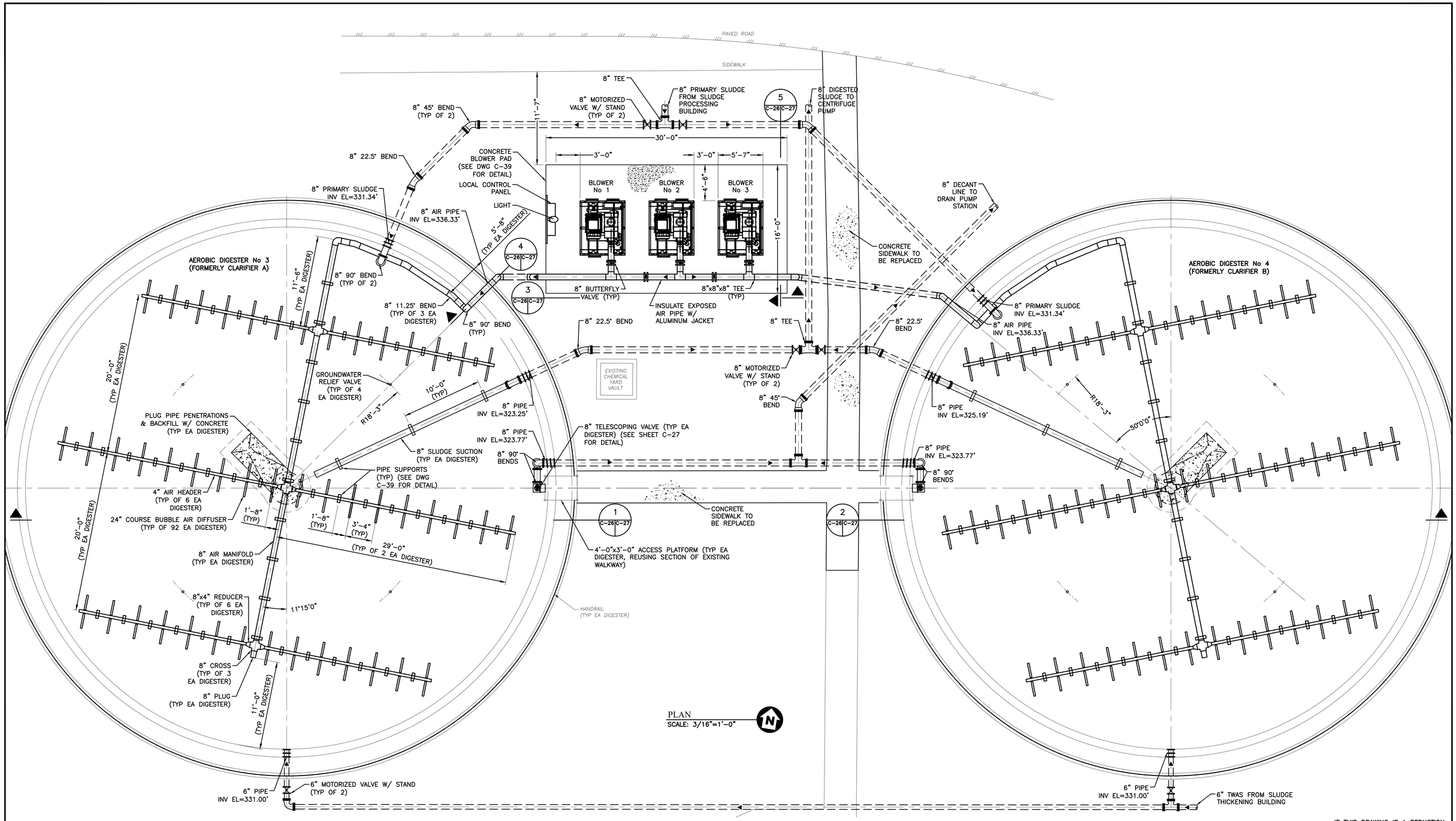

PLAN
SCALE: 3/16"=1'-0"

IF THIS DRAWING IS A REDUCTION GRAPHIC SCALE MUST BE USED

0 1' 3' 6'

SCALE: 3/8" = 1'-0"

M:\221028 Town of Culpeper WWTP Improvements\221028.00 Design\102800L_DET16.dwg

NO.	SHEET REVISION	BY	DATE	NO.	SHEET REVISION	BY	DATE

COMMONWEALTH OF VIRGINIA
JASON A. CLARK
Lic. No. 33605
4/29/2022
PROFESSIONAL ENGINEER

WW ASSOCIATES
ENGINEERS SURVEYORS PLANNERS
PO Box 4119, Lynchburg, VA 24502, Phone: 434.316.6080
968 Olympia Drive, Suite 1, Charlottesville, VA 22911, Phone: 434.984.2700
www.wwassociates.net

DESIGNED BY: JAC	PROJECT: WASTEWATER TREATMENT PLANT IMPROVEMENTS TOWN OF CULPEPER, VIRGINIA		SET REV. NO. —
DRAWN BY: WAM	TITLE: SECONDARY CLARIFIERS A & B CONVERTED TO AEROBIC DIGESTERS 3 & 4 PLAN & SECTION		DRAWING NUMBER: C-26
DIHR BY: HFW			
WWA NUMBER: 221028.00	FILE NAME: 102800L_DET16.dwg	DISCIPLINE: CIVIL	SCALE: H: AS SHOWN V: N/A	DATE: 4/29/22

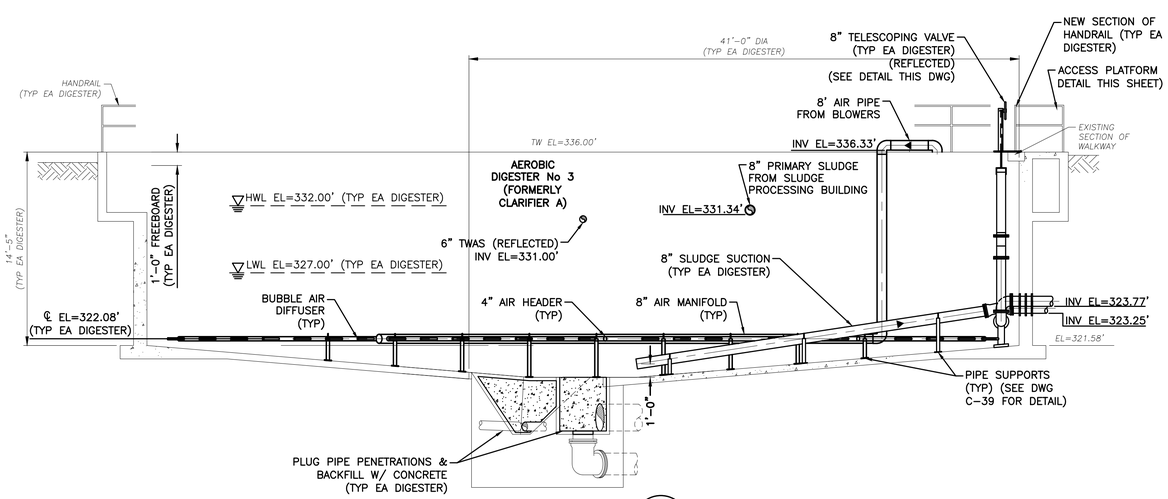

SECTION 1
SCALE: 3/16"=1'-0"
C-26 C-27

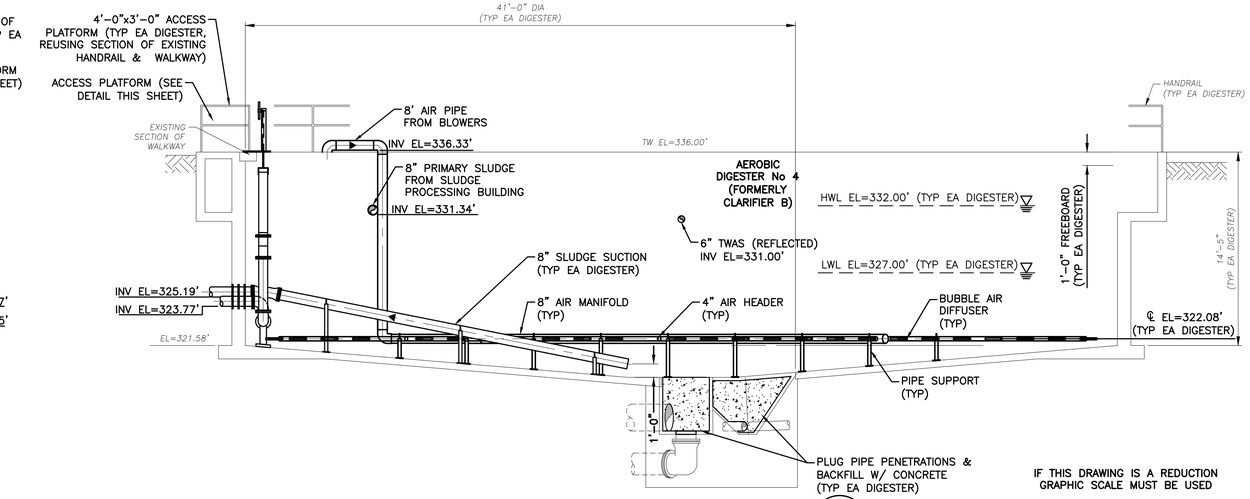

SECTION 2
SCALE: 3/16"=1'-0"
C-26 C-27

IF THIS DRAWING IS A REDUCTION
GRAPHIC SCALE MUST BE USED
0 5' 10' 15'
SCALE: 3/16" = 1'-0"

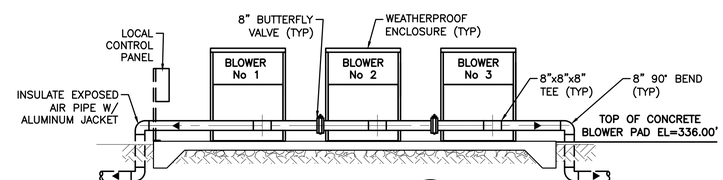

SECTION 3
SCALE: 3/16"=1'-0"
C-26 C-27

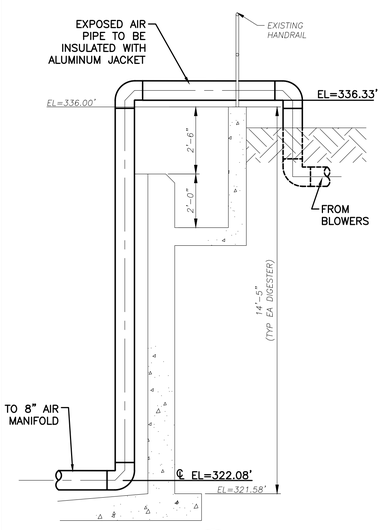

SECTION 4
SCALE: 3/8"=1'
C-26 C-27

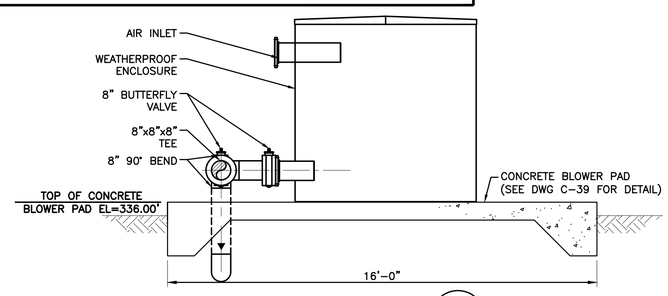

SECTION 5
SCALE: 3/8"=1'-0"
C-26 C-27

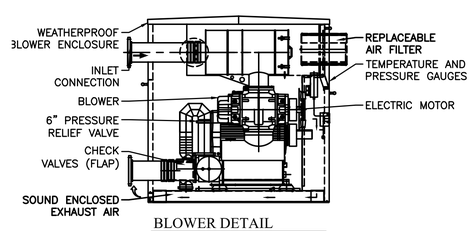

BLOWER DETAIL
SCALE: 3/8"=1'-0"

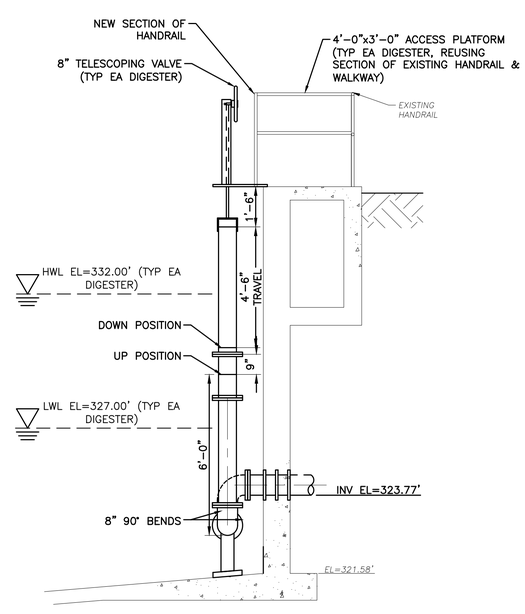

TELESCOPIC VALVE DETAIL
SCALE: 3/8"=1'

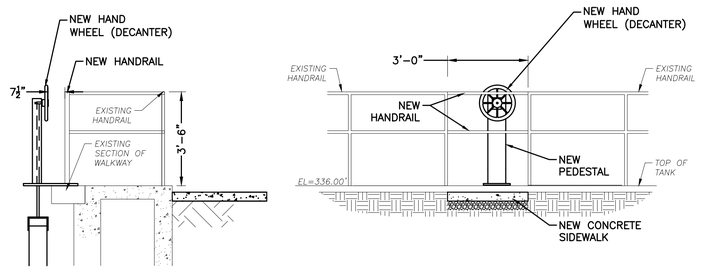

ACCESS PLATFORM DETAIL
SCALE: 3/8"=1'-0"

IF THIS DRAWING IS A REDUCTION
GRAPHIC SCALE MUST BE USED
0 1' 3' 6'
SCALE: 3/8" = 1'-0"

M:\221028 Town of Culpeper WWTP Improvements\221028.00 Design\102800L_DET21.dwg

NO.	SHEET REVISION	BY	DATE

NO.	SHEET REVISION	BY	DATE

COMMONWEALTH OF VIRGINIA
JASON A. CLARK
Lic. No. 33605
4/29/2022
PROFESSIONAL ENGINEER

WWA ENGINEERS SURVEYORS PLANNERS
ASSOCIATES
PO Box 4119 Lynchburg, VA 24502 Phone: 434.316.6080
968 Olympia Drive, Suite 1 Charlottesville, VA 22911 Phone: 434.984.2700
www.wwassociates.net

DESIGNED BY: JAC	PROJECT: WASTEWATER TREATMENT PLANT IMPROVEMENTS TOWN OF CULPEPER, VIRGINIA		SET REV. NO. —
DRAWN BY: WAM	TITLE: SECONDARY CLARIFIERS A & B CONVERTED TO AEROBIC DIGESTERS 3 & 4 PLAN & SECTION		DRAWING NUMBER: C-27
DIHR BY: HFW			
WWA NUMBER: 221028.00	FILE NAME: 102800L_DET21.dwg	DISCIPLINE: CIVIL	SCALE: H: AS SHOWN V: N/A	DATE: 4/29/22

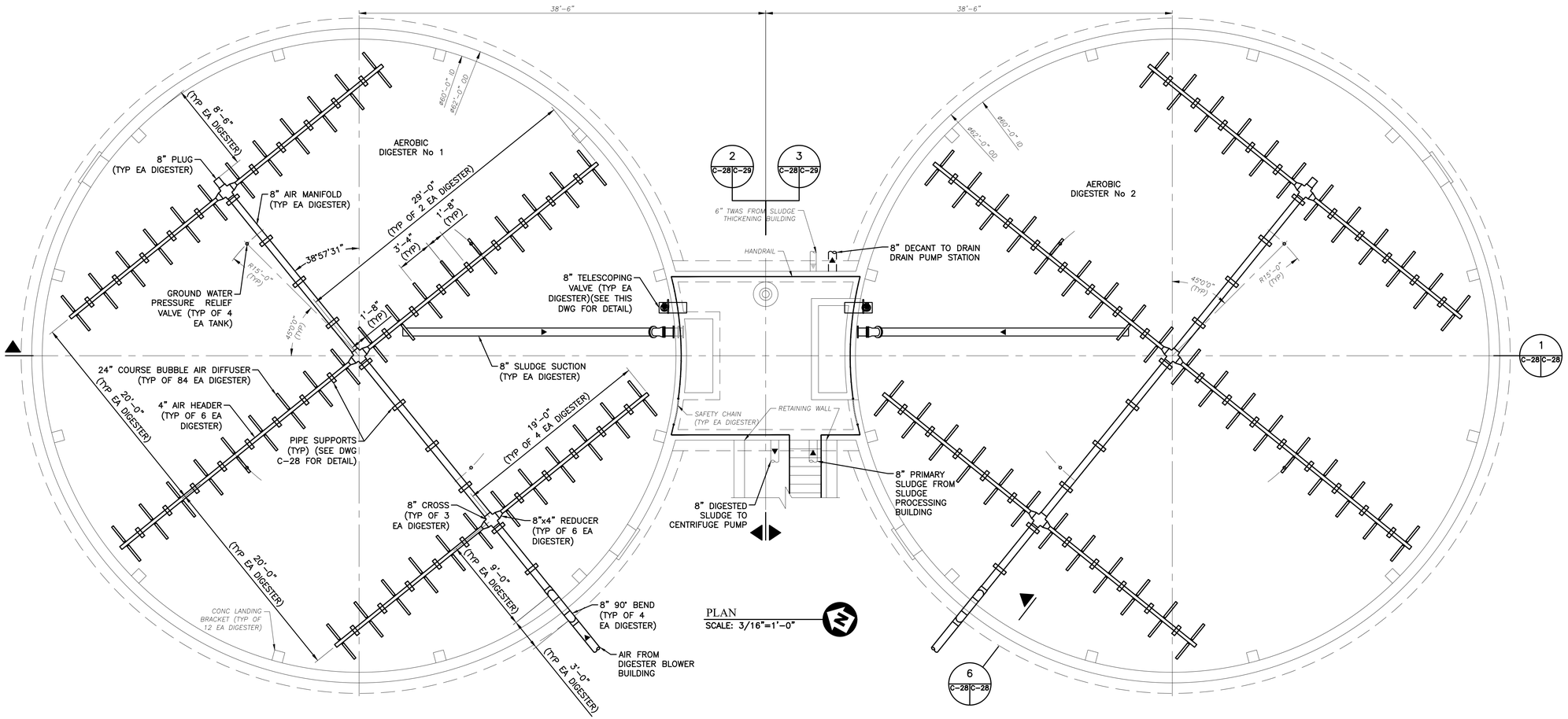

PLAN
SCALE: 3/16"=1'-0"

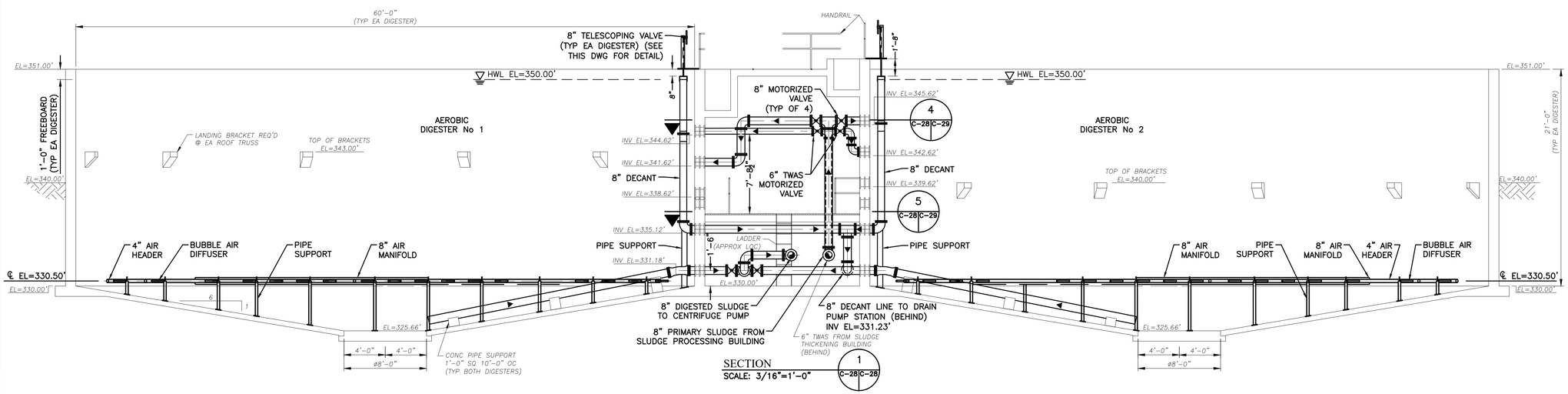

SECTION
SCALE: 3/16"=1'-0"

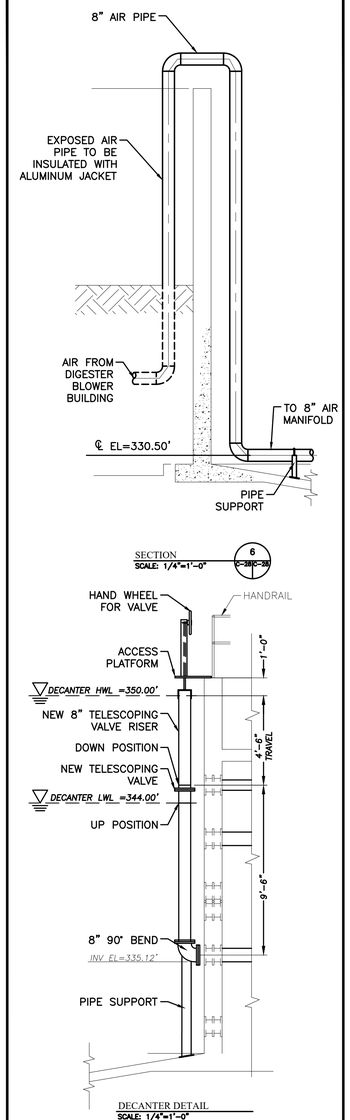

SECTION
SCALE: 1/4"=1'-0"
6 C-28 C-28

DECANTER DETAIL
SCALE: 1/4"=1'-0"

IF THIS DRAWING IS A REDUCTION GRAPHIC SCALE MUST BE USED

0 2' 4' 8'

SCALE: 1/4" = 1'-0"

IF THIS DRAWING IS A REDUCTION GRAPHIC SCALE MUST BE USED

0 5' 10' 15'

SCALE: 3/16" = 1'-0"

NO.	SHEET REVISION	BY	DATE

NO.	SHEET REVISION	BY	DATE

COMMONWEALTH OF VIRGINIA
JASON A. CLARK
Lic. No. 33605
4/29/2022
PROFESSIONAL ENGINEER

WW ENGINEERS SURVEYORS PLANNERS
ASSOCIATES
PO Box 4119 Lynchburg, VA 24502 Phone: 434.316.6080
968 Olympia Drive, Suite 1 Charlottesville, VA 22911 Phone: 434.984.2700
www.wwassociates.net

DESIGNED BY: JAC	PROJECT: WASTEWATER TREATMENT PLANT IMPROVEMENTS TOWN OF CULPEPER, VIRGINIA		SET REV. NO. —
DRAWN BY: DJC & WAM	TITLE: ANAEROBIC DIGESTERS CONVERTED TO AEROBIC DIGESTERS 1 & 2 PLAN & SECTION		DRAWING NUMBER: C-28
DIHR BY: HFW			
WWA NUMBER: 221028.00	FILE NAME: 102800L_DET1.dwg	DISCIPLINE: CIVIL	SCALE: H: AS SHOWN V: N/A
			DATE: 4/29/22

M:\221028 Town of Culpeper WWTP Improvements\221028.00 Design\102800L_DET1.dwg

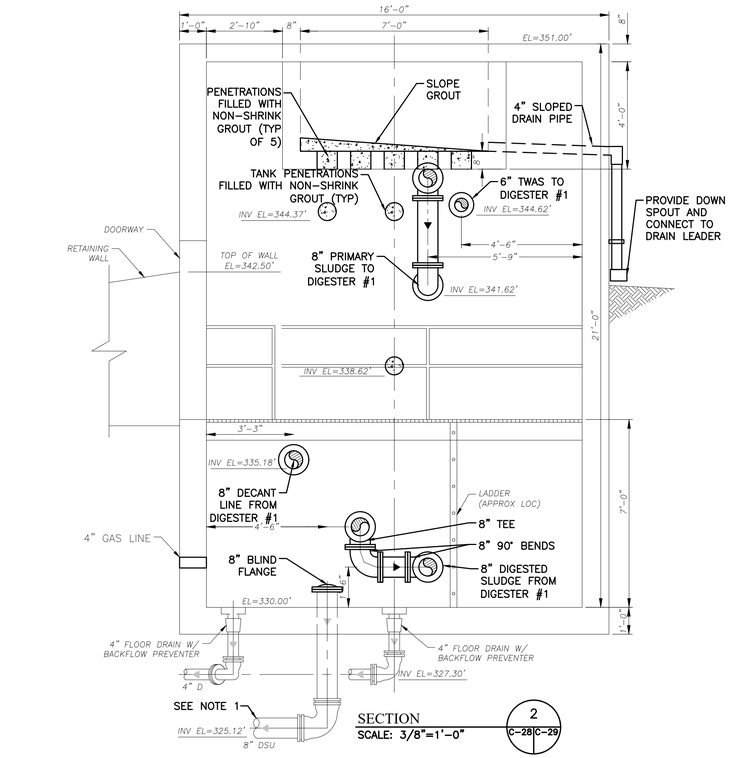

SECTION 2 (C-28 | C-29)
SCALE: 3/8"=1'-0"

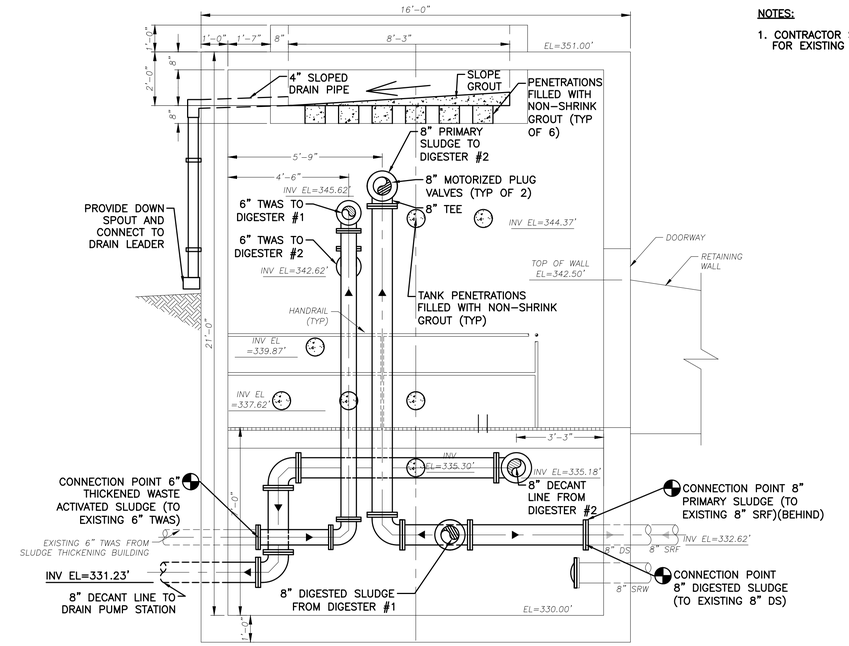

SECTION 3 (C-28 | C-29)
SCALE: 3/8"=1'-0"

NOTES:

1. CONTRACTOR SHALL FIELD VERIFY CONNECTION POINT FOR EXISTING 4" FLOOR DRAIN ON NEW 8" DRAIN.

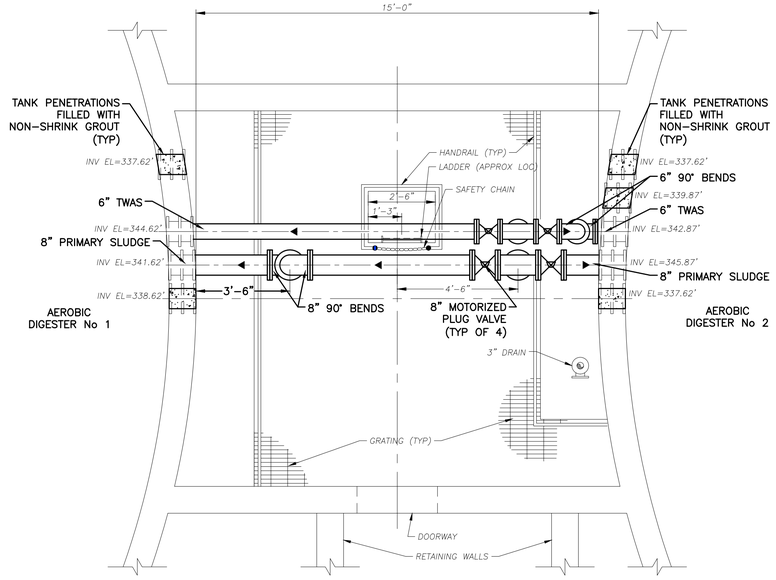

SECTION 4 (C-28 | C-29)
SCALE: 3/8"=1'-0"

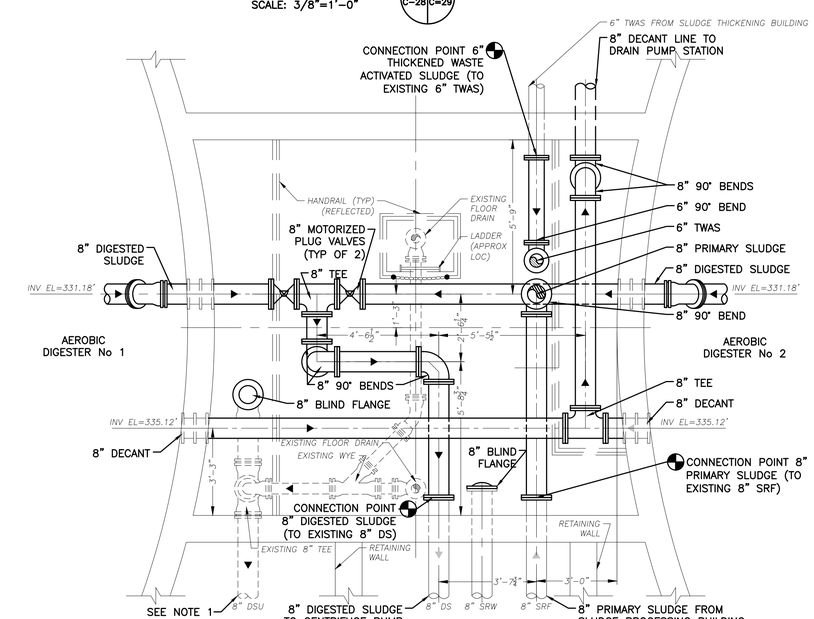

SECTION 5 (C-28 | C-29)
SCALE: 3/8"=1'-0"

IF THIS DRAWING IS A REDUCTION GRAPHIC SCALE MUST BE USED

0 1' 3' 6'

SCALE: 3/8" = 1'-0"

NO.	SHEET REVISION	BY	DATE

NO.	SHEET REVISION	BY	DATE

COMMONWEALTH OF VIRGINIA
JASON A. CLARK
Lic. No. 33605
4/29/2022
PROFESSIONAL ENGINEER

WWA ASSOCIATES
ENGINEERS SURVEYORS PLANNERS
PO Box 4119 Lynchburg, VA 24502 Phone: 434.316.6080
968 Olympia Drive, Suite 1 Charlottesville, VA 22911 Phone: 434.984.2700
WWW.WWAASSOCIATES.NET

DESIGNED BY: JAC	PROJECT: WASTEWATER TREATMENT PLANT IMPROVEMENTS TOWN OF CULPEPER, VIRGINIA		SET REV. NO. —
DRAWN BY: DJC	TITLE: ANAEROBIC DIGESTERS CONVERTED TO AEROBIC DIGESTERS 1 & 2 SECTIONS		DRAWING NUMBER: C-29
DIHR BY: HFW			
WWA NUMBER: 221028.00	FILE NAME: 102800L_DET2.dwg	DISCIPLINE: CIVIL	SCALE: H: AS SHOWN V: N/A	DATE: 4/29/22

M:\221028 Town of Culpeper WWTP Improvements\221028.00 Design\102800L_DET2.dwg

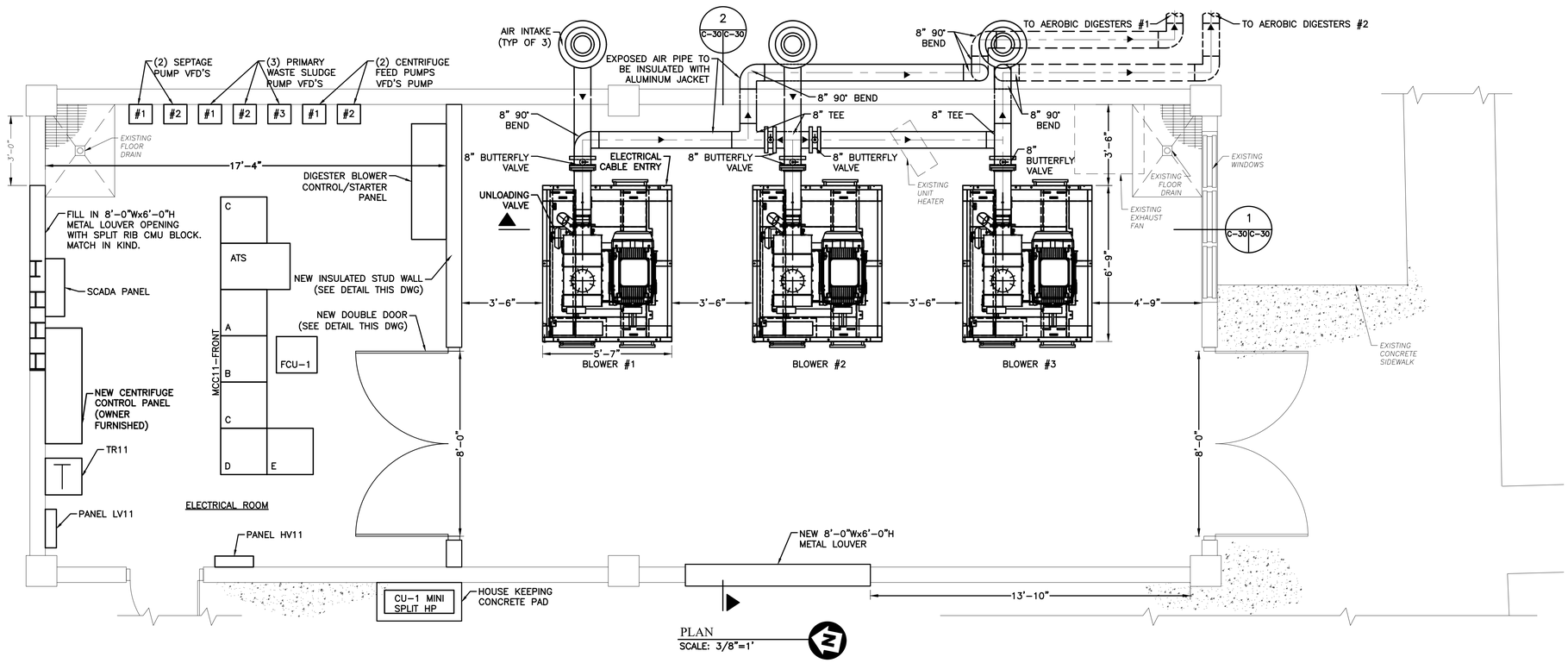

PLAN
SCALE: 3/8"=1'

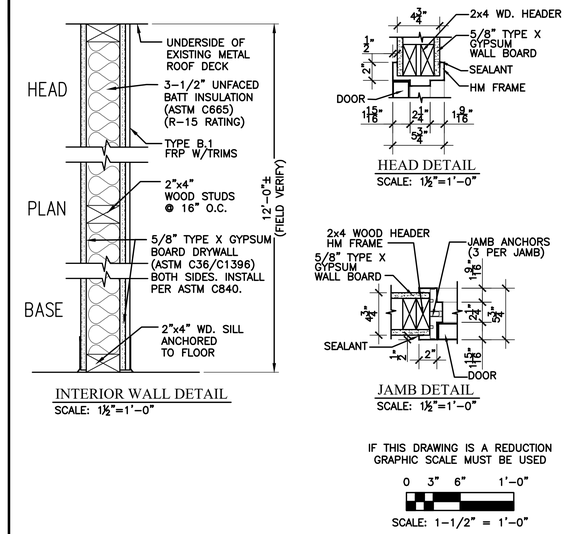

INTERIOR WALL DETAIL
SCALE: 1½"=1'-0"

HEAD DETAIL
SCALE: 1½"=1'-0"

JAMB DETAIL
SCALE: 1½"=1'-0"

IF THIS DRAWING IS A REDUCTION GRAPHIC SCALE MUST BE USED

0 3" 6" 1'-0"

SCALE: 1-1/2" = 1'-0"

NOTES:

1. SEE SPEC. SECTIONS 08110 AND 08710 FOR ADDITIONAL DOOR AND HARDWARE REQUIREMENTS.

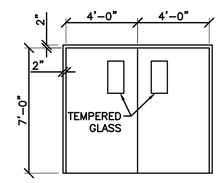

DOOR FRAME DETAIL
SCALE: 1/4"=1'-0"

IF THIS DRAWING IS A REDUCTION GRAPHIC SCALE MUST BE USED

0 2' 4' 8'

SCALE: 1/4" = 1'-0"

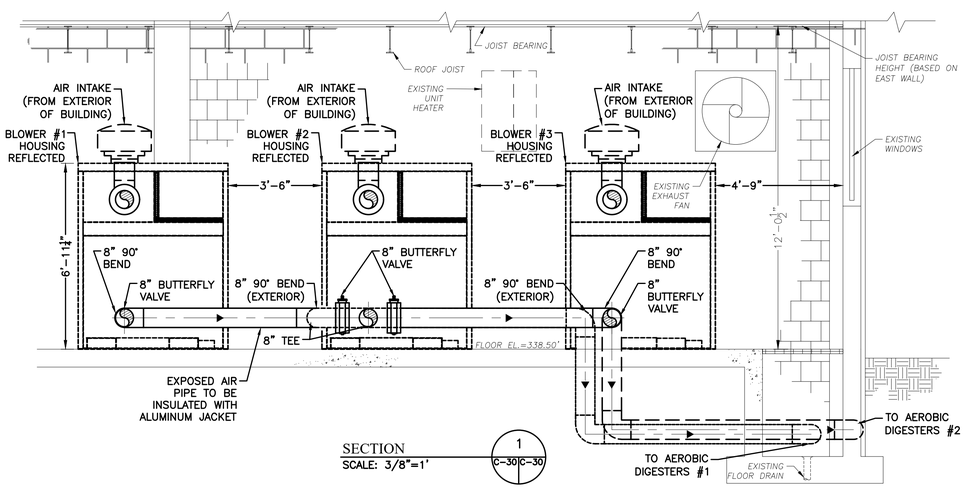

SECTION
SCALE: 3/8"=1'
1
C-30 C-30

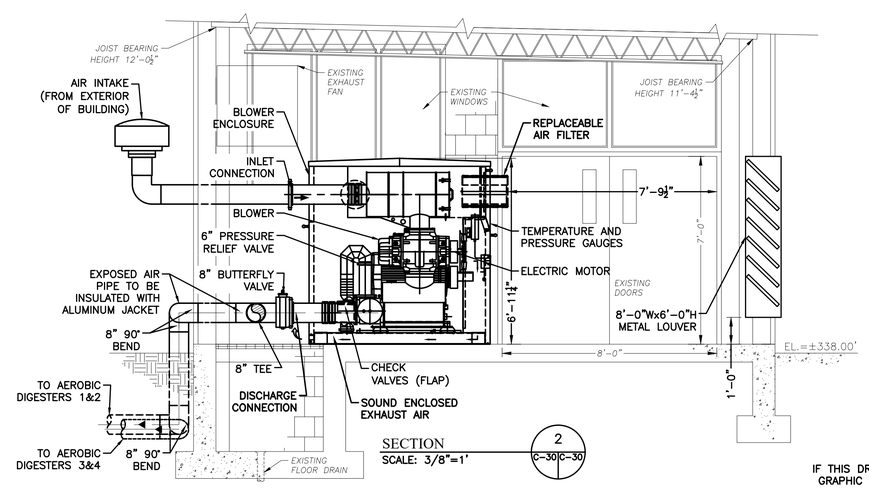

SECTION
SCALE: 3/8"=1'
2
C-30 C-30

IF THIS DRAWING IS A REDUCTION GRAPHIC SCALE MUST BE USED

0 1' 3' 6'

SCALE: 3/8" = 1'-0"

NO.	SHEET REVISION	BY	DATE

NO.	SHEET REVISION	BY	DATE

COMMONWEALTH OF VIRGINIA
JASON A. CLARK
Lic. No. 33605
4/29/2022
PROFESSIONAL ENGINEER

WWA ENGINEERS SURVEYORS PLANNERS ASSOCIATES
PO Box 4119 Lynchburg, VA 24502 Phone: 434.316.6080
568 Olympia Drive, Suite 1 Charlottesville, VA 22911 Phone: 434.984.2700
www.wwassociates.net

DESIGNED BY: JAC	PROJECT: WASTEWATER TREATMENT PLANT IMPROVEMENTS TOWN OF CULPEPER, VIRGINIA		SET REV. NO. —
DRAWN BY: DJC	TITLE: DIGESTER CONTROL (GAS RECOVERY) BUILDING CONVERTED TO DIGESTER BLOWER BUILDING (BUILDING #11) – PLAN & SECTION		DRAWING NUMBER: C-30
DIHR BY: HFW			
WWA NUMBER: 221028.00	FILE NAME: 102800L_DET9.dwg	DISCIPLINE: CIVIL	SCALE: H: AS SHOWN V: N/A	DATE: 4/29/22

M:\221028 Town of Culpeper WWTP Improvements\221028.00 Design\102800L_DET9.dwg

PLAN
SCALE: 1/4"=1'

SECTION
SCALE: 1/4"=1'

SECTION
SCALE: 1/4"=1'

SECTION
SCALE: 1/4"=1'

SECTION
SCALE: 1/4"=1'

SECTION
SCALE: 1/4"=1'

IF THIS DRAWING IS A REDUCTION GRAPHIC SCALE MUST BE USED

0 2' 4' 8'

SCALE: 1/4" = 1'-0"

NO.	SHEET REVISION	BY	DATE

NO.	SHEET REVISION	BY	DATE

COMMONWEALTH OF VIRGINIA
JASON A. CLARK
Lic. No. 33605
4/29/2022
PROFESSIONAL ENGINEER

W ENGINEERS SURVEYORS PLANNERS
ASSOCIATES
PO Box 4119 Lynchburg, VA 24502 Phone: 434.316.6080
968 Olympia Drive, Suite 1 Charlottesville, VA 22911 Phone: 434.984.2700
www.wwassociates.net

DESIGNED BY: HFW	PROJECT: WASTEWATER TREATMENT PLANT IMPROVEMENTS TOWN OF CULPEPER, VIRGINIA		SET REV. NO. –
DRAWN BY: WAM	TITLE: SLUDGE PROCESSING BUILDING (BASEMENT) NEW WORK PLAN & SECTIONS		DRAWING NUMBER: C-31
DIHR BY: HFW			
WWA NUMBER: 221028.00	FILE NAME: 102800L_DET17.dwg	DISCIPLINE: CIVIL	SCALE: H: AS SHOWN V: N/A
			DATE: 4/29/22

M:\221028 Town of Culpeper WWTP Improvements\221028.00 Design\102800L_DET17.dwg

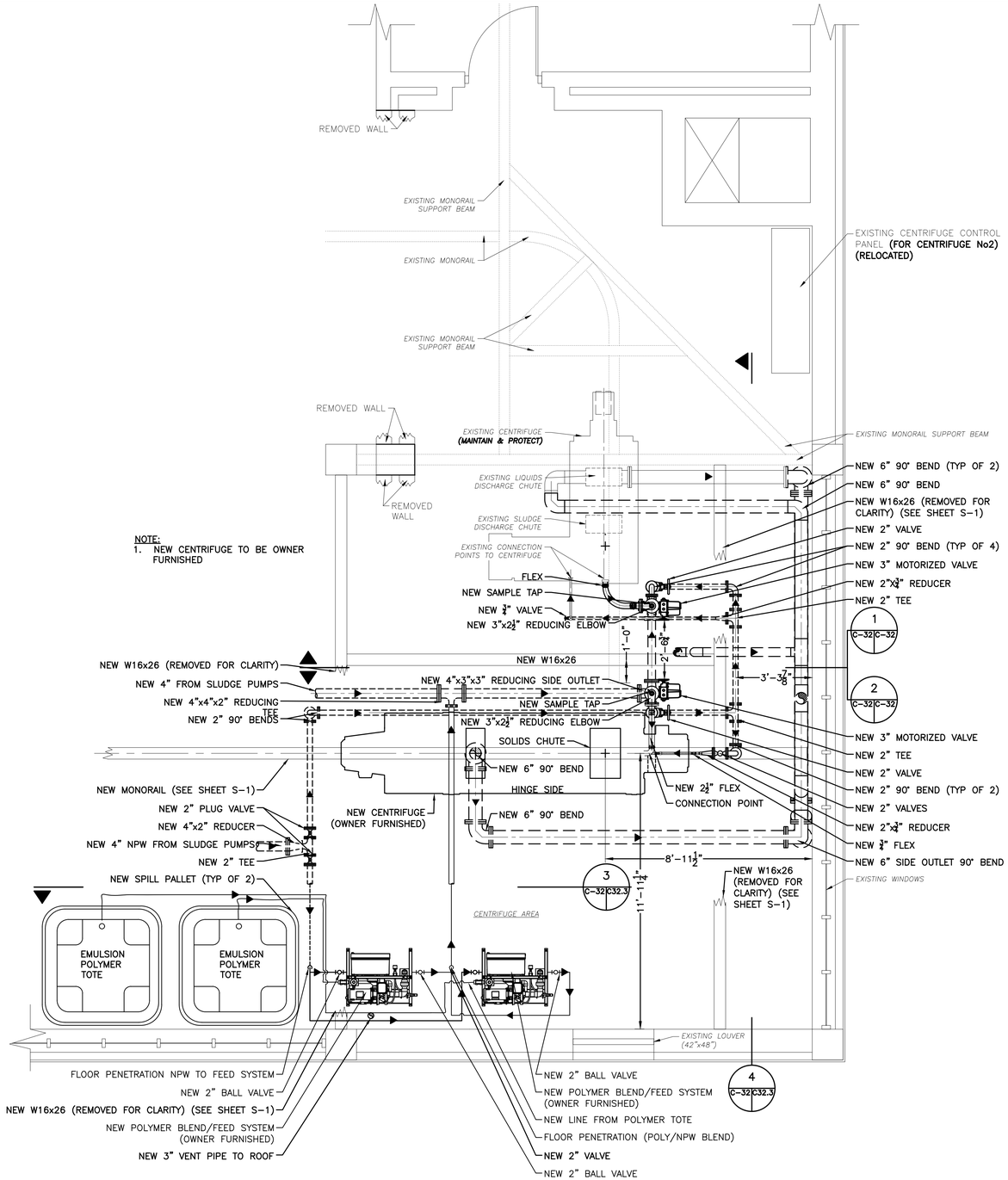

NOTE:
1. NEW CENTRIFUGE TO BE OWNER FURNISHED

FIRST FLOOR - PARTIAL PLAN
SCALE: 3/8"=1'

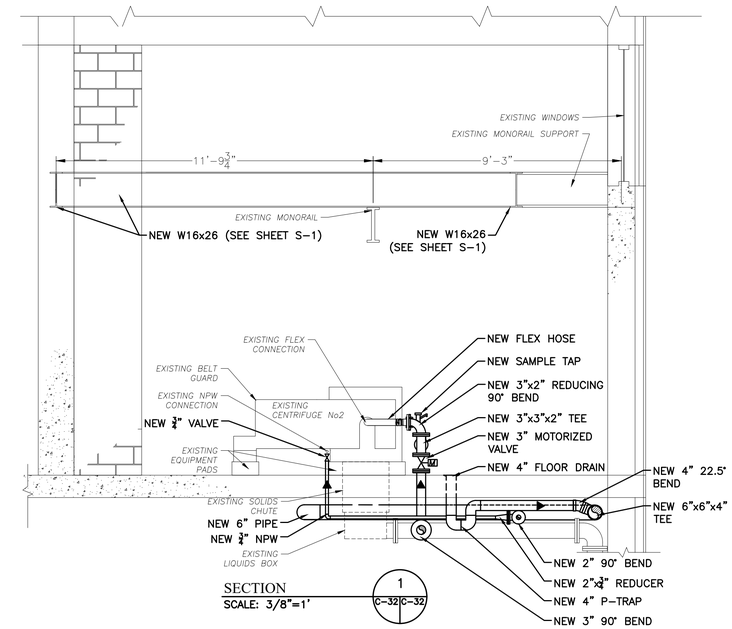

SECTION
SCALE: 3/8"=1'

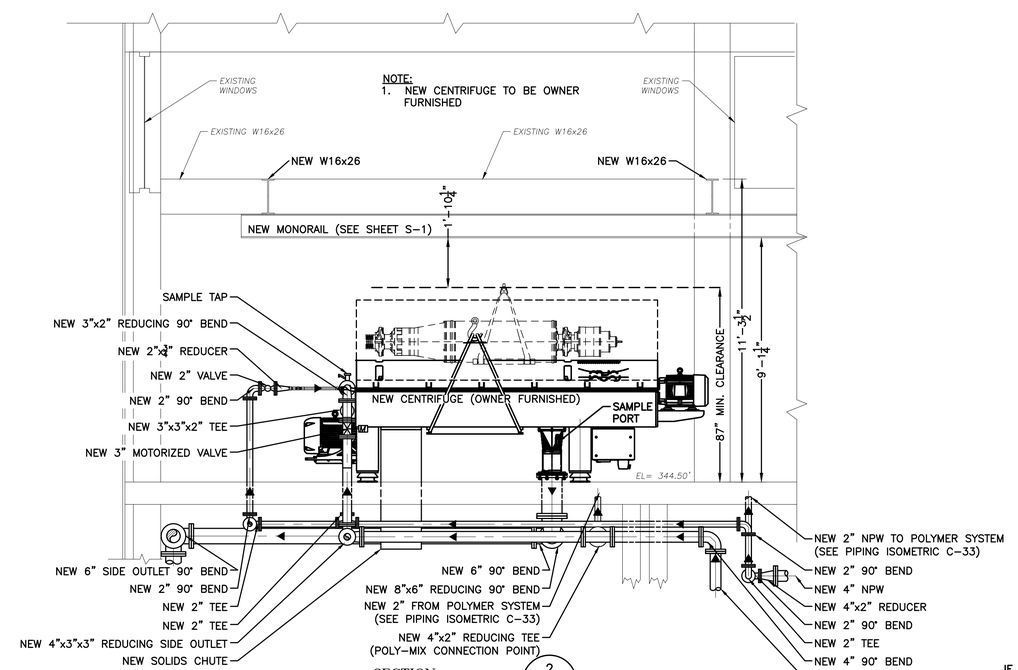

NOTE:
1. NEW CENTRIFUGE TO BE OWNER FURNISHED

SECTION
SCALE: 3/8"=1'

IF THIS DRAWING IS A REDUCTION GRAPHIC SCALE MUST BE USED

0 1' 3' 6'

SCALE: 3/8" = 1'-0"

NO.	SHEET REVISION	BY	DATE

NO.	SHEET REVISION	BY	DATE

COMMONWEALTH OF VIRGINIA
JASON A. CLARK
Lic. No. 33605
4/29/2022
PROFESSIONAL ENGINEER

WWA ENGINEERS SURVEYORS PLANNERS ASSOCIATES
PO Box 4119 Lynchburg, VA 24502 Phone: 434.316.6080
968 Olympia Drive, Suite 1 Charlottesville, VA 22911 Phone: 434.984.2700
www.wwassociates.net

DESIGNED BY: JAC	PROJECT: WASTEWATER TREATMENT PLANT IMPROVEMENTS TOWN OF CULPEPER, VIRGINIA		SET REV. NO. —
DRAWN BY: DJC & WAM	TITLE: SLUDGE PROCESSING BUILDING FIRST FLOOR (CENTRIFUGE) NEW WORK – PLAN & SECTION		DRAWING NUMBER: C-32
DIHR BY: HFW			
WWA NUMBER: 221028.00	FILE NAME: 102800L_DET5.dwg	DISCIPLINE: CIVIL	SCALE: H: AS SHOWN V: N/A	DATE: 4/29/22

M:\221028 Town of Culpeper WWTP Improvements\221028.00 Design\102800L_DET5.dwg

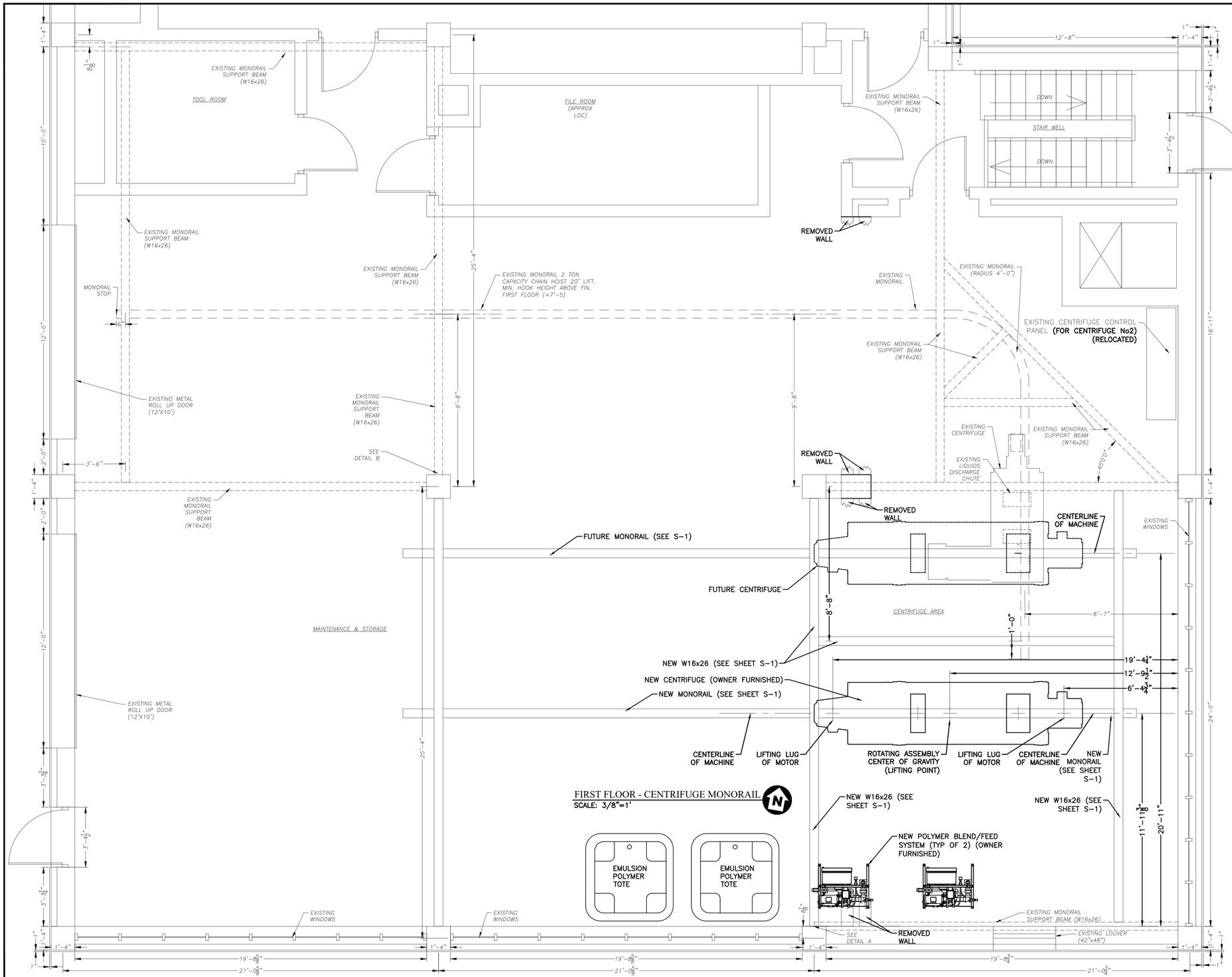

FIRST FLOOR - CENTRIFUGE MONORAIL
SCALE: 3/8"=1'

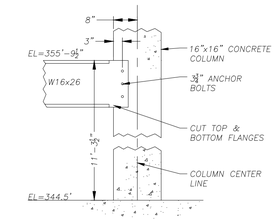

DETAIL A (EXISTING)
SCALE: NOT TO SCALE

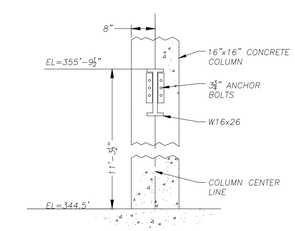

DETAIL B (EXISTING)
SCALE: NOT TO SCALE

IF THIS DRAWING IS A REDUCTION GRAPHIC SCALE MUST BE USED

0 1' 3' 6'

SCALE: 3/8" = 1'-0"

NO.	SHEET REVISION	BY	DATE

NO.	SHEET REVISION	BY	DATE

COMMONWEALTH OF VIRGINIA
JASON A. CLARK
Lic. No. 33605
4/29/2022
PROFESSIONAL ENGINEER

WWA ENGINEERS SURVEYORS PLANNERS
ASSOCIATES
PO Box 4119 Lynchburg, VA 24502 Phone: 434.316.6080
968 Olympia Drive, Suite 1 Charlottesville, VA 22911 Phone: 434.984.2700
www.wwassociates.net

DESIGNED BY: HFW	PROJECT: WASTEWATER TREATMENT PLANT IMPROVEMENTS TOWN OF CULPEPER, VIRGINIA		SET REV. NO. —
DRAWN BY: WAM	TITLE: SLUDGE PROCESSING BUILDING FIRST FLOOR (CENTRIFUGE MONORAIL) NEW WORK – PLAN		DRAWING NUMBER: C-32.1
DIHR BY: HFW			
WWA NUMBER: 221028.00	FILE NAME: 102800L_DET25.dwg	DISCIPLINE: CIVIL	SCALE: H: AS SHOWN V: N/A	DATE: 4/29/22

M:\221028 Town of Culpeper WWTP Improvements\221028.00 Design\102800L_DET25.dwg

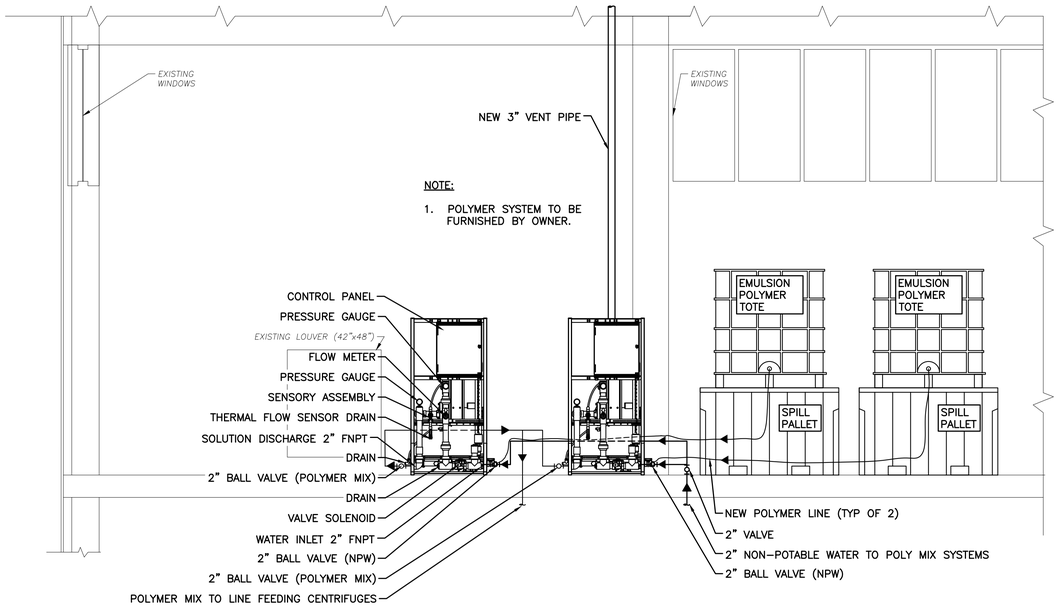

SECTION 3 (C-32 | C32.3)
SCALE: 3/8"=1'

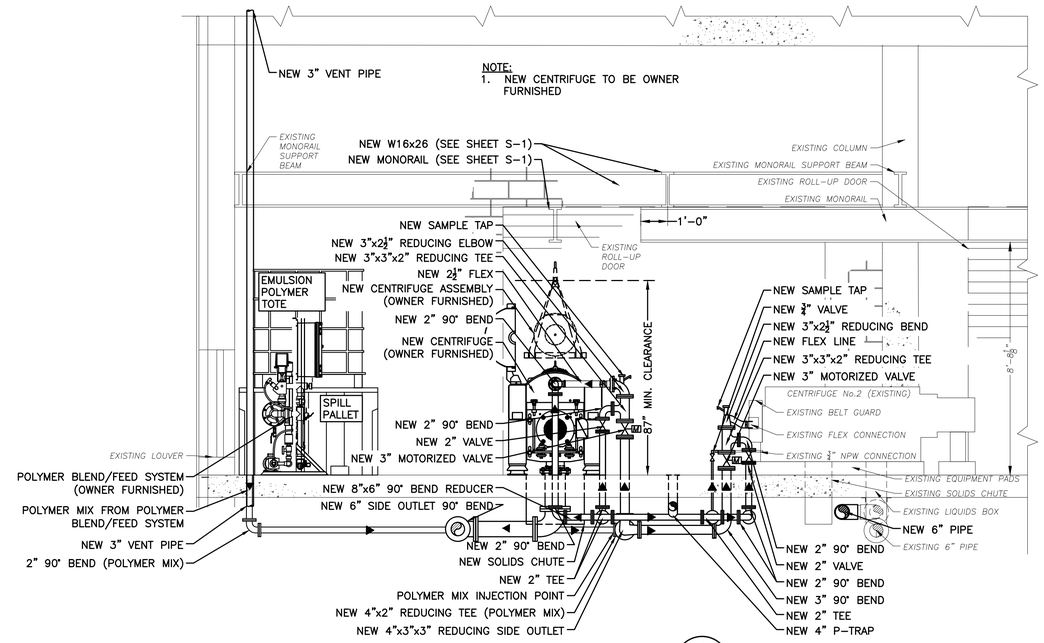

SECTION 4 (C-32 | C32.3)
SCALE: 3/8"=1'

IF THIS DRAWING IS A REDUCTION GRAPHIC SCALE MUST BE USED

0 1' 3' 6'

SCALE: 3/8" = 1'-0"

NO.	SHEET REVISION	BY	DATE	NO.	SHEET REVISION	BY	DATE

COMMONWEALTH OF VIRGINIA
JASON A. CLARK
Lic. No. 33605
4/29/2022
PROFESSIONAL ENGINEER

WWA ENGINEERS SURVEYORS PLANNERS ASSOCIATES
PO Box 4119 Lynchburg, VA 24502 Phone: 434.316.6080
968 Olympia Drive, Suite 1 Charlottesville, VA 22911 Phone: 434.984.2700
www.wwassociates.net

DESIGNED BY: JAC	PROJECT: WASTEWATER TREATMENT PLANT IMPROVEMENTS TOWN OF CULPEPER, VIRGINIA		SET REV. NO. –
DRAWN BY: DJC & WAM	TITLE: SLUDGE PROCESSING BUILDING FIRST FLOOR (CENTRIFUGE) NEW WORK – PLAN & SECTION		DRAWING NUMBER: C-32.3
DIHR BY: HFW			
WWA NUMBER: 221028.00	FILE NAME: 102800L_DET28.dwg	DISCIPLINE: CIVIL	SCALE: H: AS SHOWN V: N/A
			DATE: 4/29/22

M:\221028 Town of Culpeper WWTP Improvements\221028.00 Design\102800L_DET28.dwg

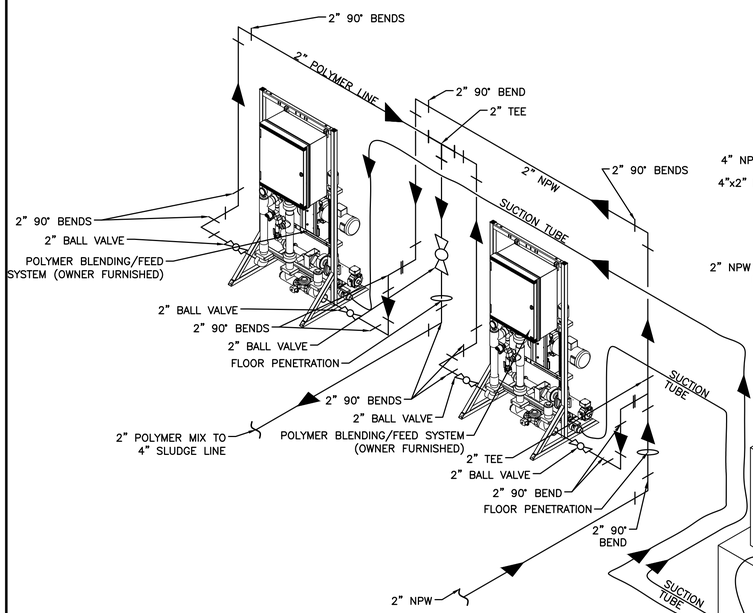

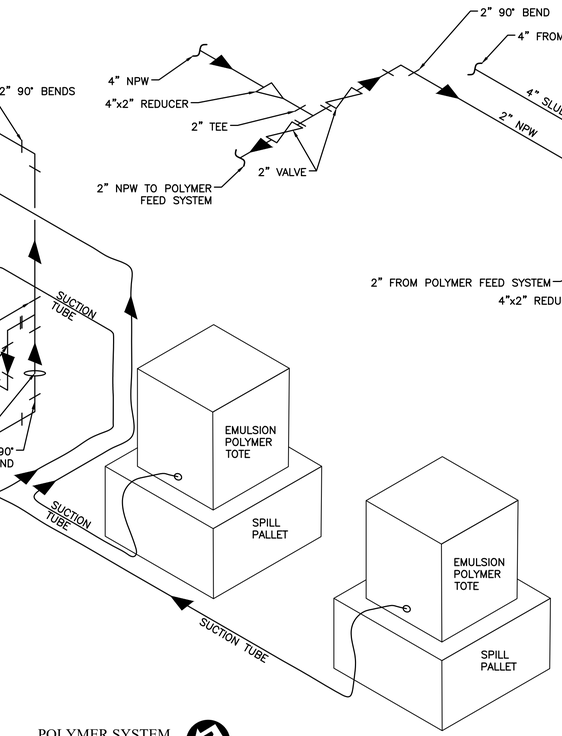

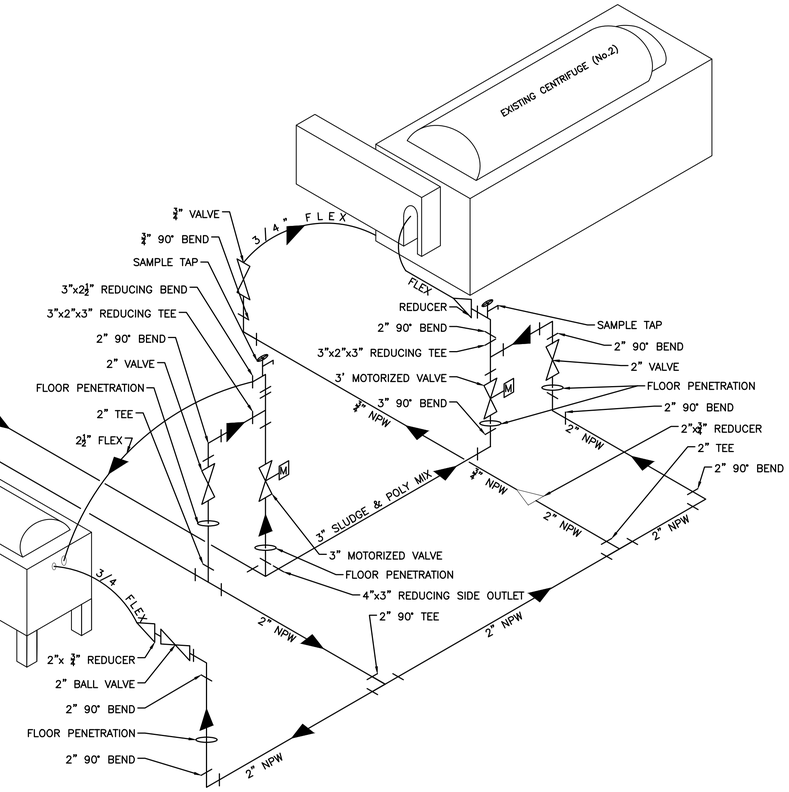

NOTE:

1. POLYMER SYSTEM IS SHOWN ROTATED IN REFERENCE TO CENTRIFUGES.

POLYMER SYSTEM
SCALE: NOT TO SCALE

CENTRIFUGES
SCALE: NOT TO SCALE

NOTES:

1. THE ISOMETRIC DRAWING INDICATES GENERAL PIPING ARRANGEMENTS AND DOES NOT INDICATE ALL PIPE, FITTINGS, SUPPORTS, AND PIPE APPURTENANCES REQUIRED. THE GENERAL CONTRACTOR SHALL PROVIDE ALL PIPE, FITTINGS, SUPPORTS, AND PIPE APPURTENANCES REQUIRED FOR A COMPLETE AND USEABLE SYSTEM. ROUTING OF ALL PIPING IS SUBJECT TO THE FINAL APPROVAL OF THE OWNER AND THE ENGINEER.
2. ALL PIPE PENETRATIONS THROUGH FLOOR SLABS SHALL BE SEALED WATERTIGHT WITH MECHANICAL LINK-SEALS SUITABLE FOR THE INTENDED CHEMICAL SERVICE.
3. FILL IN REMAINING OPENINGS WITH NON-SHRINK GROUT

M:\221028 Town of Culpeper WWTP Improvements\221028.00 Design\102800L_IS01.dwg

NO.	SHEET REVISION	BY	DATE	NO.	SHEET REVISION	BY	DATE

COMMONWEALTH OF VIRGINIA
JASON A. CLARK
Lic. No. 33605
4/29/2022
PROFESSIONAL ENGINEER

WWA ASSOCIATES
ENGINEERS SURVEYORS PLANNERS
PO Box 4119, Lynchburg, VA 24502, Phone: 434.316.6080
968 Olympia Drive, Suite 1, Charlottesville, VA 22911, Phone: 434.984.2700
www.wwassociates.net

DESIGNED BY: JAC	PROJECT: WASTEWATER TREATMENT PLANT IMPROVEMENTS TOWN OF CULPEPER, VIRGINIA		SET REV. NO. –
DRAWN BY: WAM	TITLE: SLUDGE PROCESSING BUILDING (CENTRIFUGE) PIPING ISOMETRIC		DRAWING NUMBER: C-33
DIHR BY: HFW			
WWA NUMBER: 221028.00	FILE NAME: 102800L_IS01.dwg	DISCIPLINE: CIVIL	SCALE: H: NTS V: NTS	DATE: 4/29/22

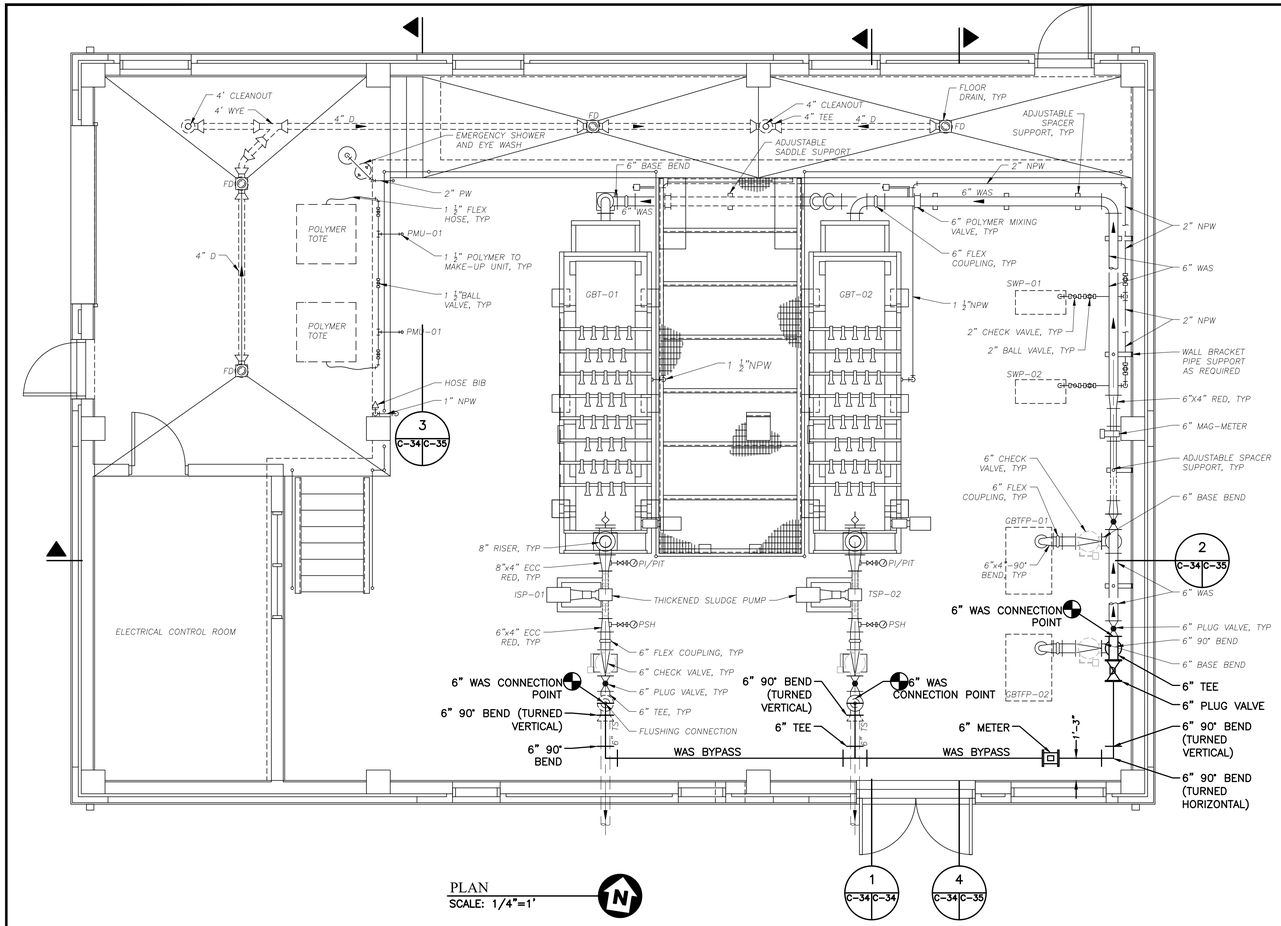

PLAN
SCALE: 1/4"=1'

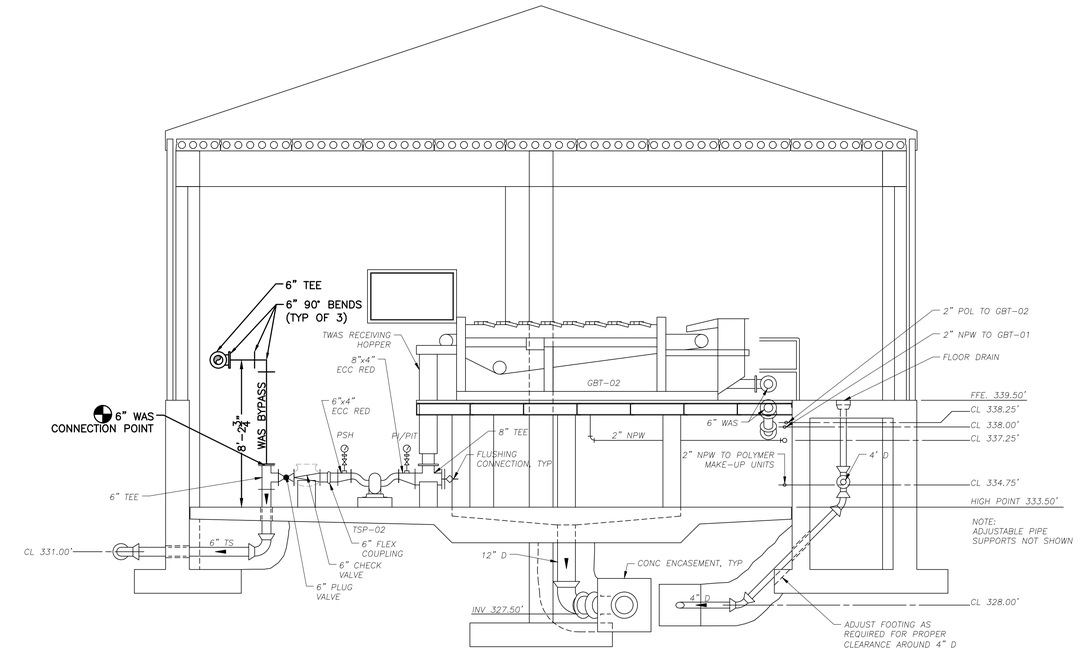

SECTION
SCALE: 1/4"=1'
1 C-34 C-34

IF THIS DRAWING IS A REDUCTION GRAPHIC SCALE MUST BE USED

0 2' 4' 8'

SCALE: 1/4" = 1'-0"

NO.	SHEET REVISION	BY	DATE	NO.	SHEET REVISION	BY	DATE

COMMONWEALTH OF VIRGINIA
JASON A. CLARK
Lic. No. 33605
4/29/2022
PROFESSIONAL ENGINEER

WW ASSOCIATES
ENGINEERS SURVEYORS PLANNERS
PO Box 4119 Lynchburg, VA 24502 Phone: 434.316.6080
968 Olympia Drive, Suite 1 Charlottesville, VA 22911 Phone: 434.984.2700
www.wwassociates.net

DESIGNED BY: HFW	PROJECT: WASTEWATER TREATMENT PLANT IMPROVEMENTS TOWN OF CULPEPER, VIRGINIA		SET REV. NO. —
DRAWN BY: WAM	TITLE: SLUDGE THICKENING BUILDING (BUILDING #9) NEW WORK PLAN & SECTION		DRAWING NUMBER: C-34
DIHR BY: HFW			
WWA NUMBER: 221028.00	FILE NAME: 102800L_DET14.dwg	DISCIPLINE: CIVIL	SCALE: H: AS SHOWN V: N/A
			DATE: 4/29/22

M:\221028 Town of Culpeper WWTP Improvements\221028.00 Design\102800L_DET14.dwg

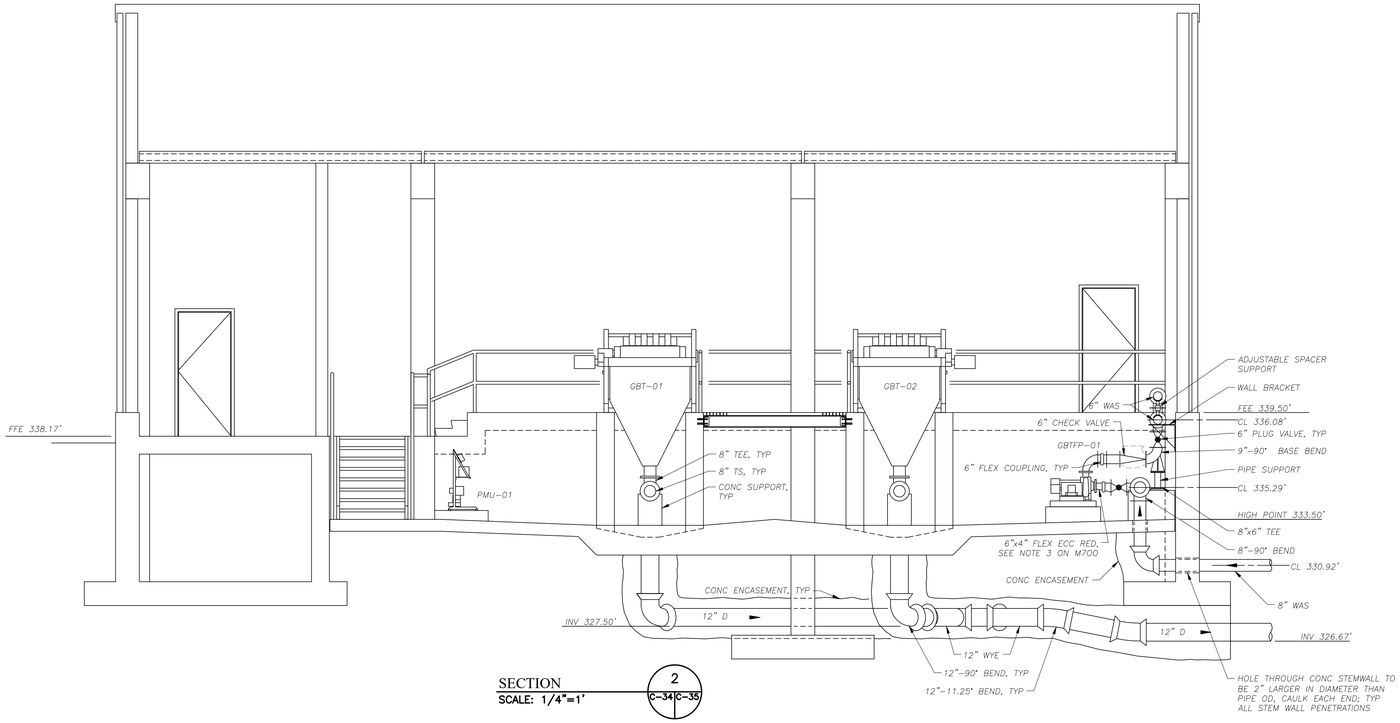

SECTION 2 (C-34 | C-35)
SCALE: 1/4"=1'

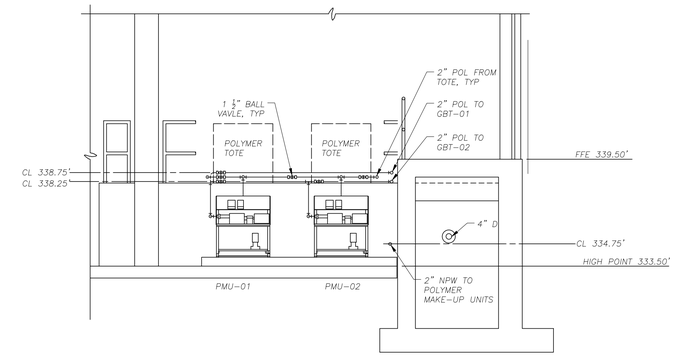

SECTION 3 (C-34 | C-35)
SCALE: 1/4"=1'

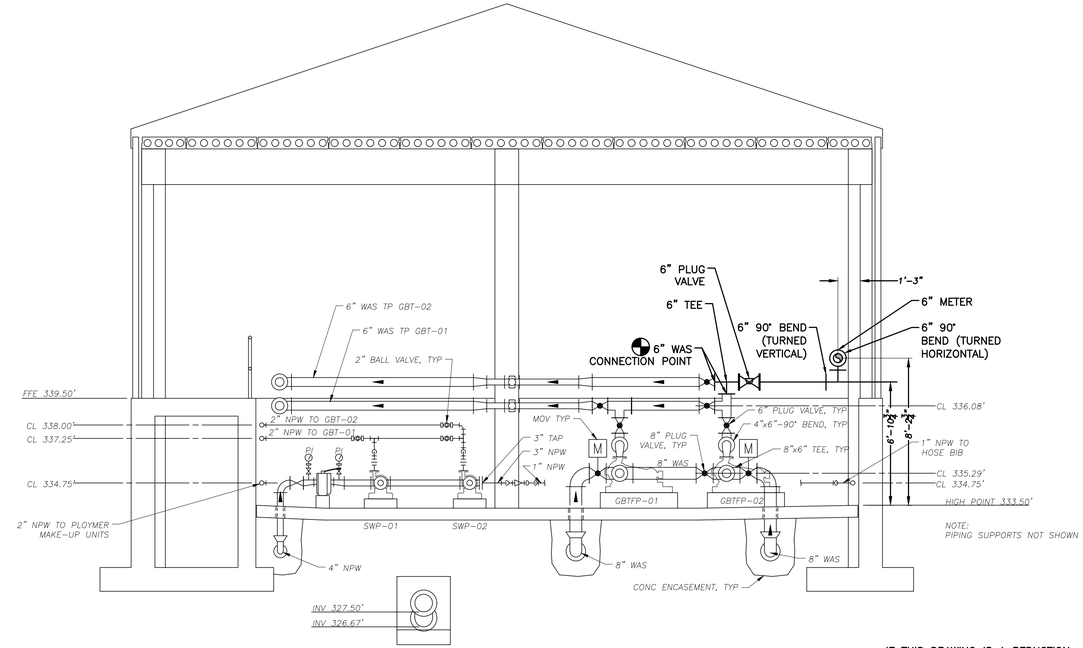

SECTION 4 (C-34 | C-35)
SCALE: 1/4"=1'

IF THIS DRAWING IS A REDUCTION GRAPHIC SCALE MUST BE USED

0 2' 4' 8'

SCALE: 1/4" = 1'-0"

NO.	SHEET REVISION	BY	DATE	NO.	SHEET REVISION	BY	DATE

COMMONWEALTH OF VIRGINIA
JASON A. CLARK
Lic. No. 33605
4/29/2022
PROFESSIONAL ENGINEER

WWA ASSOCIATES
ENGINEERS SURVEYORS PLANNERS
PO Box 4119 Lynchburg, VA 24502 Phone: 434.316.6080
968 Olympia Drive, Suite 1 Charlottesville, VA 22911 Phone: 434.984.2700
www.wwassociates.net

DESIGNED BY: HFW
DRAWN BY: WAM
DIHR BY: HFW
WWA NUMBER: 221028.00

PROJECT: WASTEWATER TREATMENT PLANT IMPROVEMENTS TOWN OF CULPEPER, VIRGINIA

TITLE: SLUDGE THICKENING BUILDING (BUILDING #9) NEW WORK SECTIONS

SET REV. NO.: –

DRAWING NUMBER: C-35

FILE NAME: 102800L_DET15.dwg
DISCIPLINE: CIVIL
SCALE: H: AS SHOWN V: N/A
DATE: 4/29/22

M:\221028 Town of Culpeper WWTP Improvements\221028.00 Design\102800L_DET15.dwg

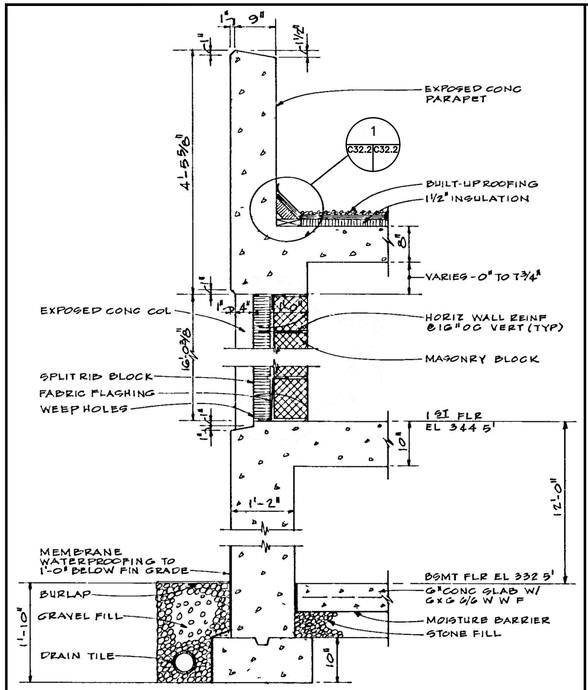

TYPICAL WALL SECTION
SCALE: 3/4"=1'-0"

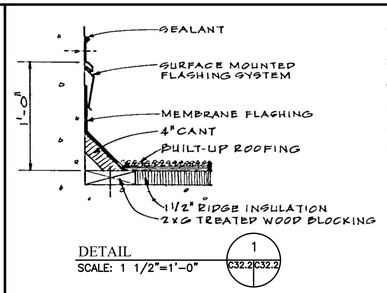

DETAIL
SCALE: 1 1/2"=1'-0"

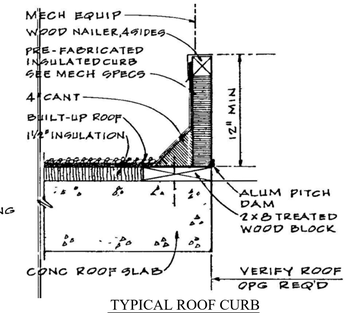

TYPICAL ROOF CURB
SCALE: 1 1/2"=1'-0"

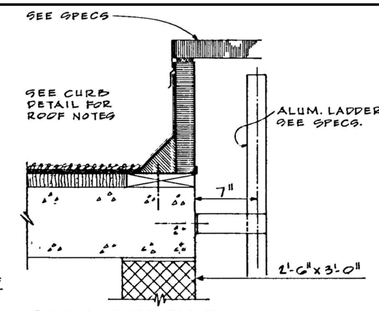

ROOF SCUTTLE
SCALE: 1 1/2"=1'-0"

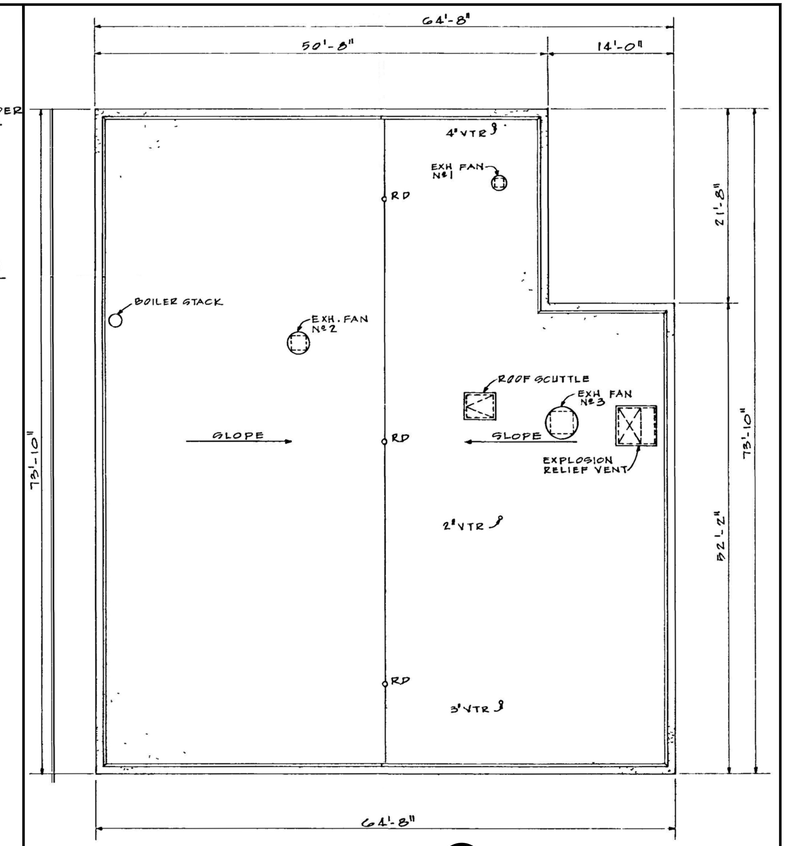

PLAN
SCALE: 1/8"=1'-0"

IF THIS DRAWING IS A REDUCTION GRAPHIC SCALE MUST BE USED

0 4' 8' 16'

SCALE: 1/8" = 1'-0"

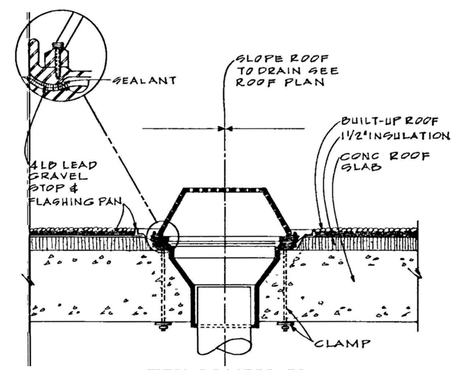

TYPICAL ROOF DRAIN
SCALE: 1 1/2"=1'-0"

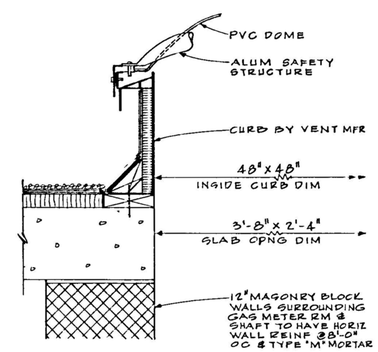

EXPLOSION RELIEF VENT
SCALE: 1 1/2"=1'-0"

IF THIS DRAWING IS A REDUCTION GRAPHIC SCALE MUST BE USED

0 3" 6" 1'-0"

SCALE: 1-1/2" = 1'-0"

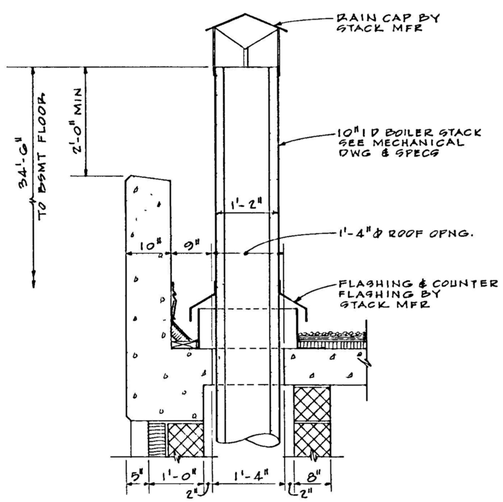

DETAIL BOILER STACK THROUGH ROOF
SCALE: 3/4"=1'-0"

IF THIS DRAWING IS A REDUCTION GRAPHIC SCALE MUST BE USED

0 6" 1'-0" 2'-0"

SCALE: 3/4" = 1'-0"

ROOF SCOPE OF WORK:

1. REMOVE AND DISPOSE OF THE EXISTING BUILT UP ROOF LAYERS, ASPHALT, BALLAST STONE, AND ASSOCIATED FLASHINGS.
2. REMOVE AND DISPOSE OF THE INSULATION DOWN TO THE CONCRETE DECK.
3. INSTALL A ⅛" PER FOOT TAPERED POLYISOCYANURATE INSULATION. THE MINIMUM START OF THE INSULATION WILL BE A 1½" START TO MATCH THE EXISTING HEIGHT ALLOWING THE ROOF TO DRAIN AS IT IS CURRENTLY.
4. REMOVE AND REPLACE ALL ROOFING MATERIAL.
5. INSTALL A NEW BLACK EPDM ROOF SYSTEM OVER THE PREPARED ROOF.
6. INFORMATION IS BASED ON RECORD DRAWINGS. CONTRACTOR SHALL VERIFY ALL CONDITIONS IN THE FIELD AND ADJUST ACCORDINGLY.

FLASHINGS AND TERMINATIONS:

1. FLASH ALL WALLS, PROJECTIONS, PENETRATIONS AND ROOF CURBS IN ACCORDANCE TO THE MANUFACTURER'S SPECIFICATIONS.
2. REMOVE AND DISPOSE OF THE METAL COPING FROM THE PERIMETER WALLS.

NO.	SHEET REVISION	BY	DATE

NO.	SHEET REVISION	BY	DATE

COMMONWEALTH OF VIRGINIA
JASON A. CLARK
Lic. No. 33605
4/29/2022
PROFESSIONAL ENGINEER

WWA ASSOCIATES
ENGINEERS SURVEYORS PLANNERS
PO Box 4119 Lynchburg, VA 24502 Phone: 434.316.6080
968 Olympia Drive, Suite 1 Charlottesville, VA 22911 Phone: 434.984.2700
www.wwassociates.net

DESIGNED BY: JAC	PROJECT: WASTEWATER TREATMENT PLANT IMPROVEMENTS TOWN OF CULPEPER, VIRGINIA		SET REV. NO. –
DRAWN BY: DJC	TITLE: SLUDGE PROCESSING BUILDING (BUILDING #12) NEW ROOFING WORK–PLAN & DETAILS		DRAWING NUMBER: C–36
DIHR BY: HFW			
WWA NUMBER: 221028.00	FILE NAME: 102800L_DET27.dwg	DISCIPLINE: CIVIL	SCALE: H: AS SHOWN V: N/A	DATE: 4/29/22

M:\221028 Town of Culpeper WWTP Improvements\221028.00 Design\102800L_DET27.dwg

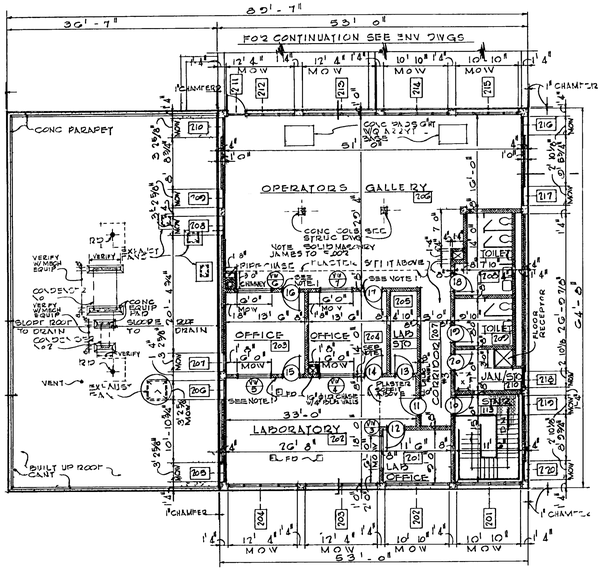

PLAN-LOWER ROOF
SCALE: 1/8"=1'-0"

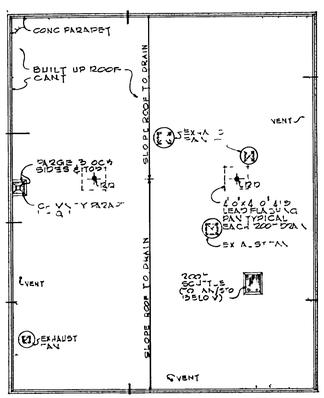

PLAN-UPPER ROOF
SCALE: 1/8"=1'-0"

IF THIS DRAWING IS A REDUCTION
GRAPHIC SCALE MUST BE USED

0 4' 8' 16'

SCALE: 1/8" = 1'-0"

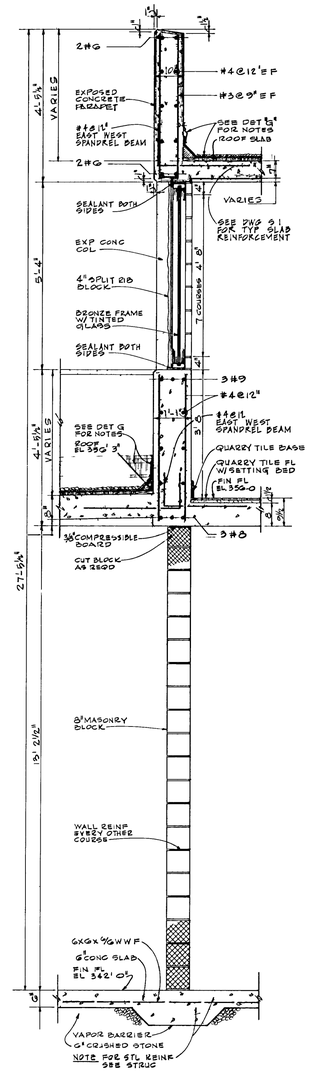

TYPICAL WALL SECTION
SCALE: 3/4"=1'

IF THIS DRAWING IS A REDUCTION
GRAPHIC SCALE MUST BE USED

0 6" 1'-0" 2'-0"

SCALE: 3/4" = 1'-0"

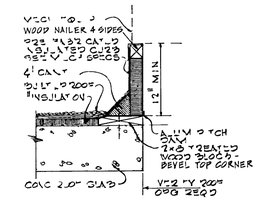

TYPICAL ROOF CURB
SCALE: 1-1/2"=1'

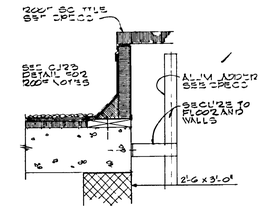

ROOF SCUTTLE
SCALE: 1-1/2"=1'

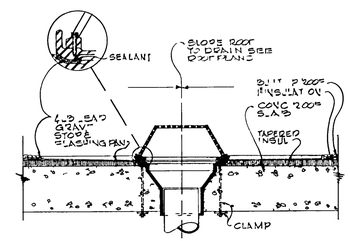

TYPICAL ROOF DRAIN
SCALE: 1-1/2"=1'

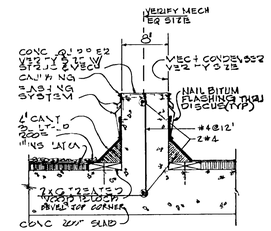

ROOF EQUIPMENT PIER
SCALE: 1-1/2"=1'

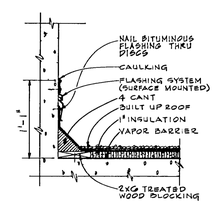

DETAIL
SCALE: 1-1/2"=1'

IF THIS DRAWING IS A REDUCTION
GRAPHIC SCALE MUST BE USED

0 3" 6" 1'-0"

SCALE: 1-1/2" = 1'-0"

ROOF SCOPE OF WORK:

1. REMOVE AND DISPOSE OF THE EXISTING BUILT UP ROOF LAYERS, ASPHALT, BALLAST STONE, AND ASSOCIATED FLASHINGS.
2. REMOVE AND DISPOSE OF THE INSULATION DOWN TO THE CONCRETE DECK.
3. INSTALL A ⅛" PER FOOT TAPERED POLYISOCYANURATE INSULATION. THE MINIMUM START OF THE INSULATION WILL BE A 1½" START TO MATCH THE EXISTING HEIGHT ALLOWING THE ROOF TO DRAIN AS IT IS CURRENTLY.
4. REMOVE AND REPLACE ALL ROOFING MATERIAL.
5. INSTALL A NEW BLACK EPDM ROOF SYSTEM OVER THE PREPARED ROOF.
6. INFORMATION IS BASED ON RECORD DRAWINGS. CONTRACTOR SHALL VERIFY ALL CONDITIONS IN THE FIELD AND ADJUST ACCORDINGLY.

FLASHINGS AND TERMINATIONS:

1. FLASH ALL WALLS, PROJECTIONS, PENETRATIONS AND ROOF CURBS IN ACCORDANCE TO THE MANUFACTURER'S SPECIFICATIONS.
2. REMOVE AND DISPOSE OF THE METAL COPING FROM THE PERIMETER WALLS.

NO.	SHEET REVISION	BY	DATE

NO.	SHEET REVISION	BY	DATE

COMMONWEALTH OF VIRGINIA
JASON A. CLARK
Lic. No. 33605
4/29/2022
PROFESSIONAL ENGINEER

WW ASSOCIATES
ENGINEERS SURVEYORS PLANNERS
PO Box 4119 Lynchburg, VA 24502 Phone: 434.316.6080
968 Olympia Drive, Suite 1 Charlottesville, VA 22911 Phone: 434.984.2700
www.wwassociates.net

DESIGNED BY: JAC	PROJECT: WASTEWATER TREATMENT PLANT IMPROVEMENTS TOWN OF CULPEPER, VIRGINIA		SET REV. NO. —
DRAWN BY: DJC/WAM	TITLE: LAB/CONTROL BUILDING (BUILDING #13) NEW ROOFING WORK UPPER & LOWER ROOF PLANS		DRAWING NUMBER: C-37
DIHR BY: HFW			
WWA NUMBER: 221028.00	FILE NAME: 102800L_DET29.dwg	DISCIPLINE: CIVIL	SCALE: H: AS SHOWN V: N/A	DATE: 4/29/22

M:\221028 Town of Culpeper WWTP Improvements\221028.00 Design\102800L_DET29.dwg

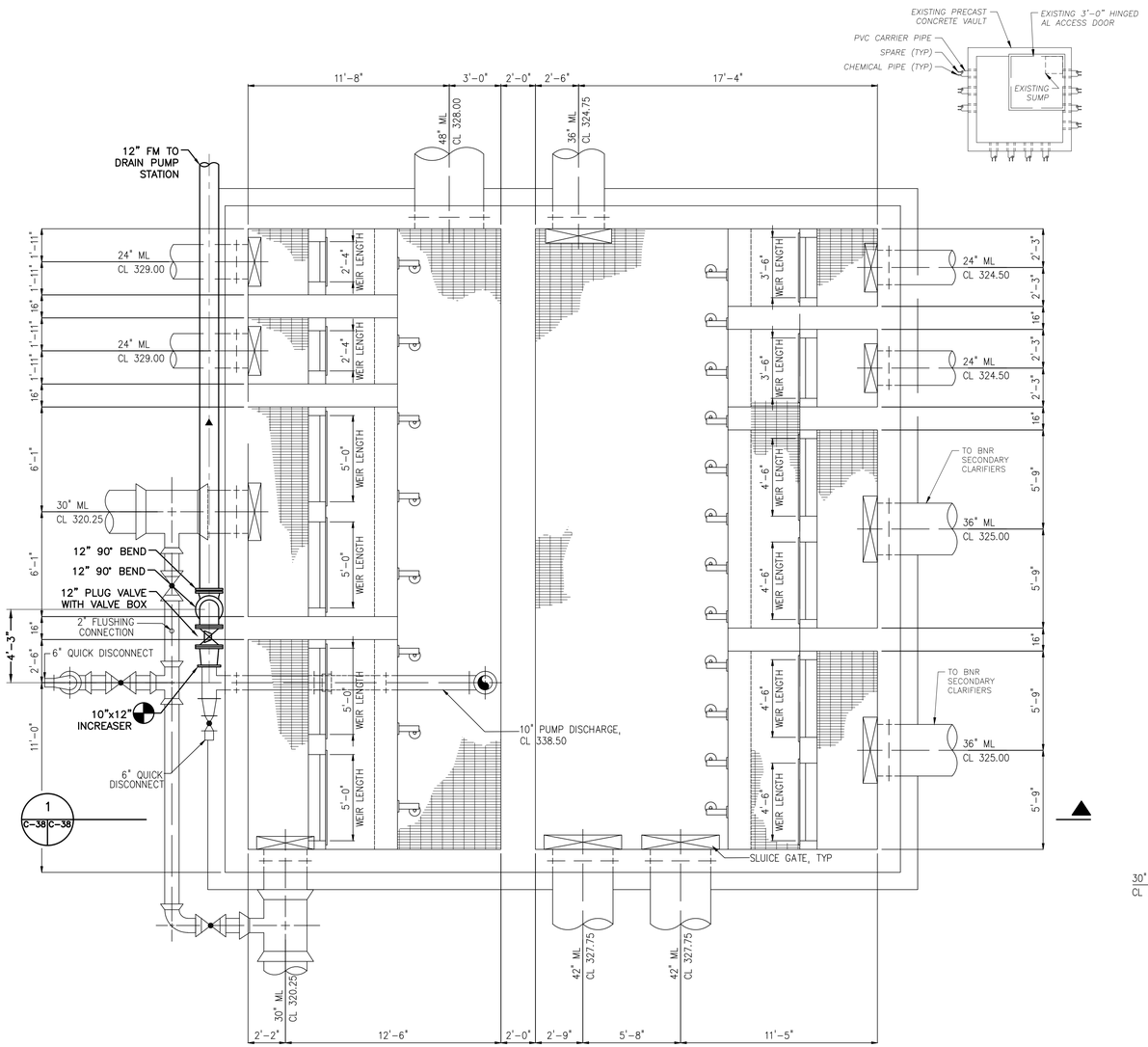

BOTTOM PLAN
SCALE: 1/4"=1'-0"

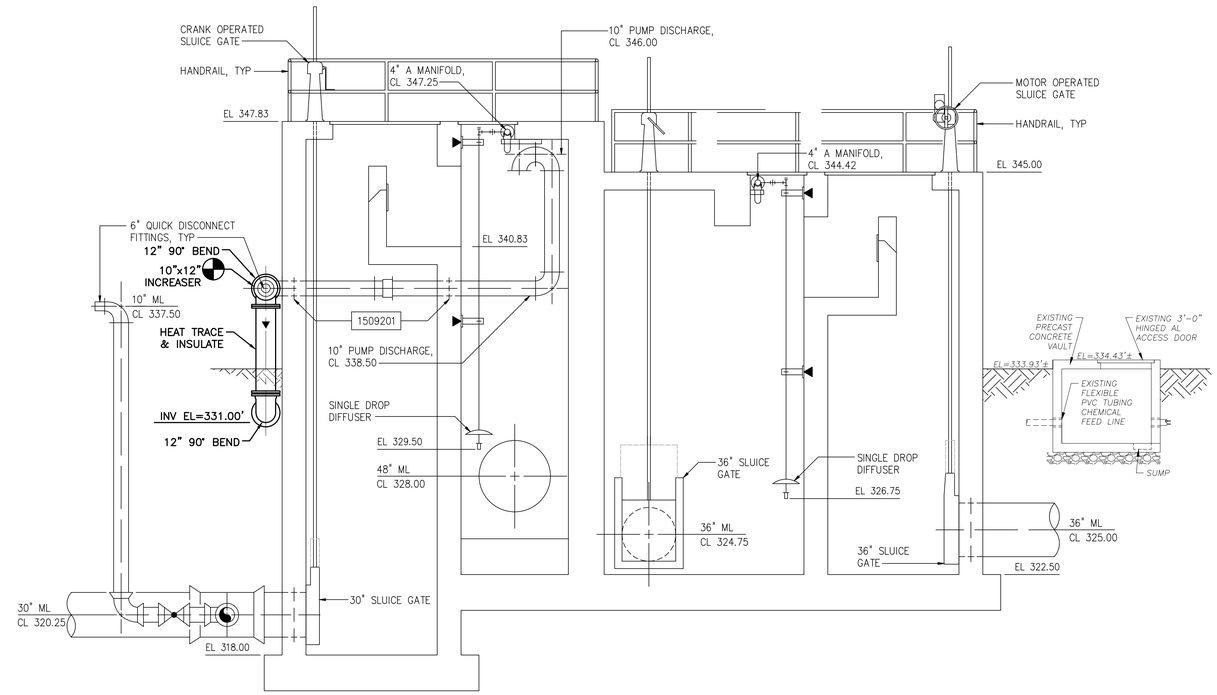

SECTION
SCALE: 1/4"=1'-0"

IF THIS DRAWING IS A REDUCTION GRAPHIC SCALE MUST BE USED

0 2' 4' 8'

SCALE: 1/4" = 1'-0"

M:\221028 Town of Culpeper WWTP Improvements\221028.00 Design\102800L_DET31.dwg

NO.	SHEET REVISION	BY	DATE	NO.	SHEET REVISION	BY	DATE

COMMONWEALTH OF VIRGINIA
JASON A. CLARK
Lic. No. 33605
4/29/2022
PROFESSIONAL ENGINEER

WWA ENGINEERS SURVEYORS PLANNERS ASSOCIATES
PO Box 4119, Lynchburg, VA 24502, Phone: 434.316.6080
968 Olympia Drive, Suite 1, Charlottesville, VA 22911, Phone: 434.984.2700
www.wwassociates.net

DESIGNED BY: JAC	PROJECT: WASTEWATER TREATMENT PLANT IMPROVEMENTS TOWN OF CULPEPER, VIRGINIA		SET REV. NO. –
DRAWN BY: DJC/WAM	TITLE: DRAIN PUMP STATION FORCE MAIN AT BNR SPLITTER BOX – NEW WORK PLAN & SECTION		DRAWING NUMBER: C-38
DIHR BY: HFW			
WWA NUMBER: 221028.00	FILE NAME: 102800L_DET31.dwg	DISCIPLINE: CIVIL	SCALE: H: AS SHOWN V: N/A	DATE: 4/29/22

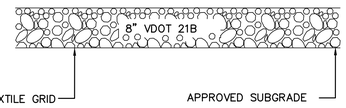

GRAVEL PAVEMENT DETAIL
SCALE: NOT TO SCALE

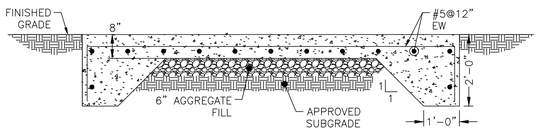

CONCRETE BLOWER PAD-DETAIL
SCALE: NOT TO SCALE

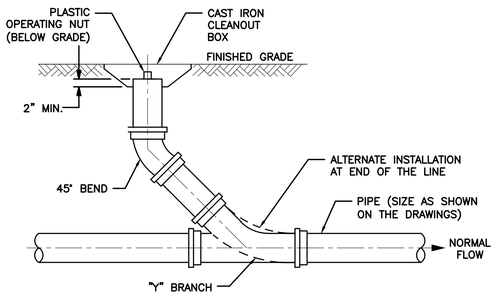

TYPICAL CLEANOUT
SCALE: NOT TO SCALE

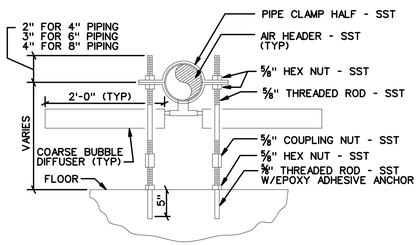

INTERIOR AIR/SLUDGE PIPING SUPPORT-DETAIL
SCALE: NOT TO SCALE

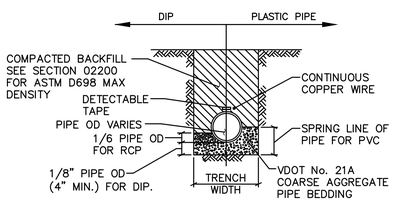

PIPE BEDDING
SCALE: NOT TO SCALE

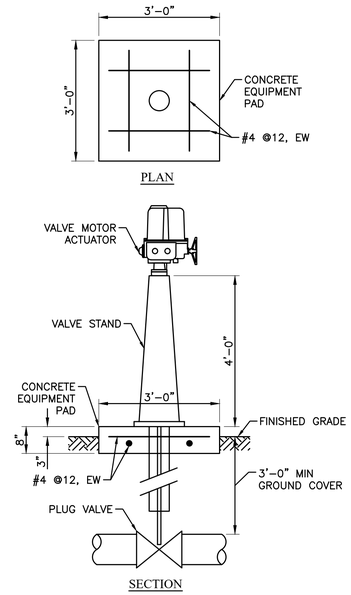

EXTERIOR MOTORIZED VALVE ACTUATOR WITH STAND
SCALE: NOT TO SCALE

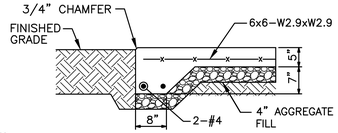

NOTES:

1. SIDEWALK SHALL BE CONSTRUCTED FROM CAST-IN-PLACE CONCRETE PER SPEC. SECTION 03300.
2. DISTANCE BETWEEN SCORE LINE SHALL NOT EXCEED 5' IN LONGITUDINAL DIRECTION.
3. SLOPE ON SIDEWALK SHALL PROMOTE POSITIVE DRAINAGE AWAY FROM BUILDING.
4. 1/2" PREMOLDED EXPANSION FILLER TO BE PLACED BETWEEN SIDEWALK AND BUILDING.
5. REFER TO DRAWINGS FOR SIDEWALK WIDTHS AND LOCATIONS.

SIDEWALK DETAIL
SCALE: NOT TO SCALE

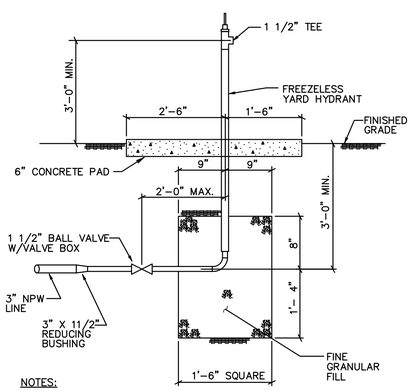

NOTES:

1. PROVIDE A PERMANENT SIGN ON ALL NONPOTABLE WATER FIXTURES WHICH READS "NONPOTABLE WATER. UNFIT TO DRINK."

NPW YARD HYDRANT
SCALE: NOT TO SCALE

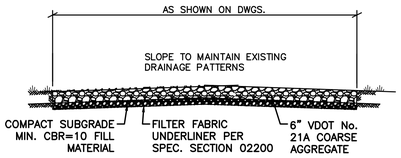

NOTES:

1. PROVIDE NEW GRAVEL ACCESS ROAD AT WASTEWATER TREATMENT PLANT SITE AS SHOWN ON THE DRAWINGS.
2. THE CONTRACTOR SHALL MAINTAIN AND SUPPLEMENT COARSE AGGREGATE FOR EXISTING WASTEWATER TREATMENT PLANT ACCESS ROAD AS REQUIRED FOR CONSTRUCTION TRAFFIC. AT THE END OF CONSTRUCTION, THE CONTRACTOR SHALL DEVELOP SUITABLE SUBGRADE AND PROVIDE FINISHED GRAVEL ROAD COURSE AS DETAILED AT NO ADDITIONAL COST TO THE OWNER.

NEW GRAVEL ACCESS ROAD
SCALE: NOT TO SCALE

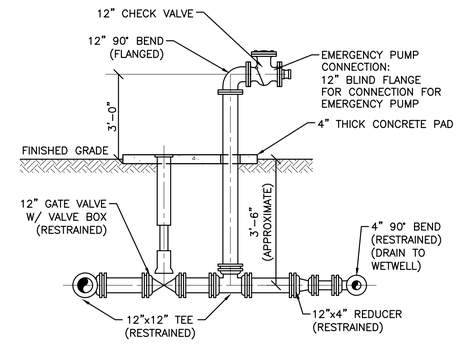

NEW BYPASS PUMP CONNECTION
SCALE: NOT TO SCALE

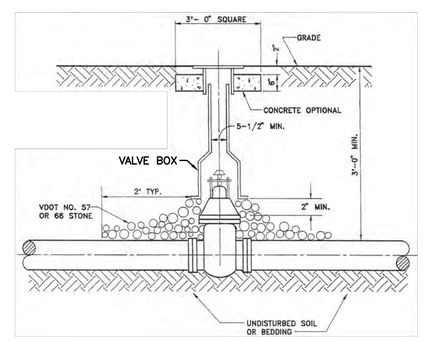

TYPICAL VALVE BOX INSTALLATION
SCALE: NOT TO SCALE

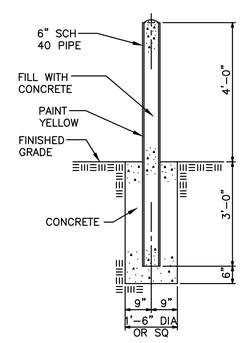

PIPE BOLLARD
SCALE: NOT TO SCALE

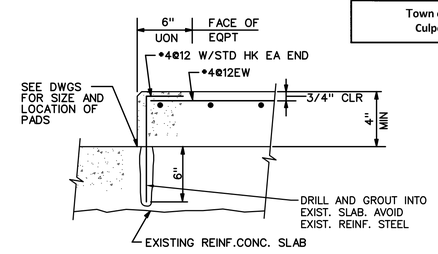

TYPICAL INTERIOR EQUIPMENT PAD
SCALE: NOT TO SCALE

NOTES:

1. MANHOLE TO MEET CURRENT REQUIREMENTS OF ASTM SPEC. C-476.
2. ALL REINFORCING STEEL TO MEET CURRENT REQUIREMENTS OF ASTM SPEC. A-615.
3. CONCRETE TO BE 4000 PSI MINIMUM COMPRESSIVE STRENGTH.
4. TAPERED JOINT WITH O-RING GASKET TO MEET CURRENT REQUIREMENTS OF ASTM SPEC. C-361 & C-443.
5. 301 MASTIC OR APPROVED EQUAL SHALL BE USED IN ADDITION TO THE JOINT SPECIFIED.
6. APPROVED FLEXIBLE JOINT REQUIRED ON ALL PIPE CONNECTIONS TO MANHOLES. INSTALLATION SHALL BE IN ACCORDANCE WITH MANUFACTURER'S INSTRUCTIONS. STUB MAY BE USED AT THE APPROVAL OF THE INSPECTOR.
7. MANUFACTURER'S NAME TO BE ON THE INSIDE FACE OF ALL SECTIONS.
8. SET COVER FRAME ON PIONEER 301 MASTIC OR APPROVED SUBSTITUTE.
9. FASTEN WATERTIGHT FRAME TO 3/4" ANCHOR BOLTS (SET ACCORDING TO CONE SECTION DETAIL) WITH NUT AND 2" WASHER. CUT ANCHOR BOLTS OFF 1" ABOVE NUT.
10. KEYWAYS MAY BE SUBSTITUTED FOR LIFTING LUGS.

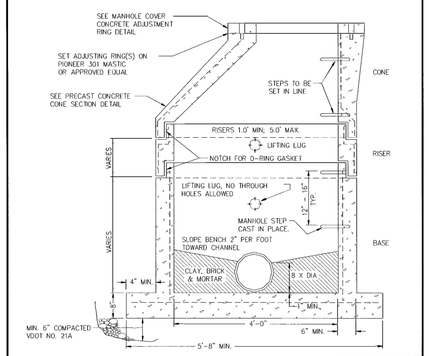

31

Town of Culpeper & Culpeper County | PRECAST CONCRETE 4' DIAMETER MANHOLE

NOTES:

1. Concrete must be 4000 PSI compressive strength, minimum.
2. Pipe connections to manholes to be approved flexible sleeves.
3. Manholes over 6' diameter require detailed drawings on plans.
4. All reinforcing must meet current requirements of ASTM Spec. A-615.
5. Manufacturer's name must be on inside face of all sections.
6. Manhole must meet current requirements of ASTM Spec. C-478.
7. Place 6" compacted VDOT No. 21A under base sections.
8. Joint configuration may be cast bell-up or spigot-up.

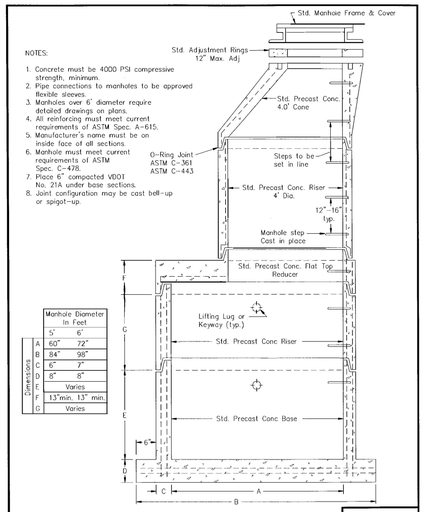

Dimensions	Manhole Diameter In Feet	
	5'	6'
A	60"	72"
B	84"	98"
C	6"	7"
D	8"	8"
E	Varies	
F	13"min. 13" min.	
G	Varies	

32

Town of Culpeper & Culpeper County | PRECAST CONCRETE 5' AND 6' DIAMETER MANHOLE

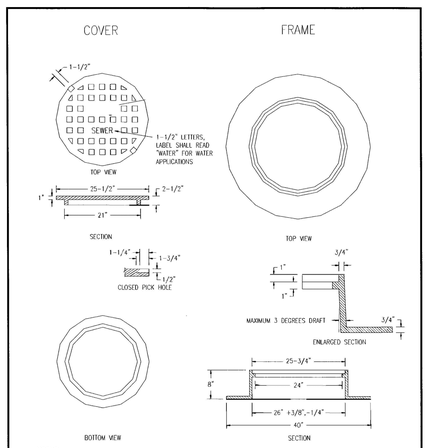

NOTES:

1. MACHINE ALL BEARING SURFACES TO TRUE AND LEVEL.
2. MANHOLE FRAME MAY BE CUSSETTED.
3. USE ASTM A48 CLASS 30B GRAY IRON OR BETTER.
4. CERTIFY FRAME AND COVER FOR AASHTO H20 LOADING OR BETTER.
5. RECESS LABEL LETTERING AND LOGO.

39

Town of Culpeper & Culpeper County | STANDARD MANHOLE FRAME AND COVER

NOTES:

1. Concrete shall be 4000 PSI compressive strength, min.
2. All reinforcing shall meet requirements of current ASTM Spec A-615.
3. Manhole sections shall meet requirements of current ASTM Spec C-478.
4. Tapered joint with O-ring gasket shall meet requirements ASTM Specs C-361 & C-443.
5. Cast manhole section into base 2" or depth of joint, whichever is deeper.
6. Joint configuration may be cast bell-up or spigot-up.
7. Size doghouse openings 4" min. and 8" max. larger than pipe O.D.
8. All air release piping shall be stainless steel.
9. For force mains smaller than 6" diameter, except for ductile iron, clamp the air/vacuum release valve to the angle iron support brace.
10. Cast base on firm, undisturbed soil.
11. Standard precast base section may be used for new force main construction. Bed standard base on min. 6" VDOT No. 21A. Core holes for pipe min. 4" larger than pipe O.D. Conform to this detail in all other respects.

CHART A

	Min. Dimensions		
FM	to 16"	to 20"	to 36"
MH	4'	5'	6'
A	48"	60"	72"
B	6"	6"	7"

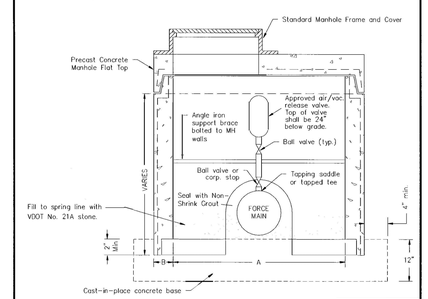

55

Town of Culpeper & Culpeper County | SEWAGE FORCE MAIN AIR or VACUUM RELEASE ASSEMBLY

NO.	SHEET REVISION	BY	DATE	NO.	SHEET REVISION	BY	DATE

COMMONWEALTH OF VIRGINIA
JASON A. CLARK
Lic. No. 33605
4/29/2022
PROFESSIONAL ENGINEER

WW ASSOCIATES
ENGINEERS SURVEYORS PLANNERS
PO Box 4119 Lynchburg, VA 24502 Phone: 434.316.6080
968 Olympia Drive, Suite 1 Charlottesville, VA 22911 Phone: 434.984.2700
www.wwassociates.net

DESIGNED BY: JAC	PROJECT: WASTEWATER TREATMENT PLANT IMPROVEMENTS TOWN OF CULPEPER, VIRGINIA		SET REV. NO. –
DRAWN BY: DJC	TITLE: PROJECT DETAILS		DRAWING NUMBER: C-39
DIHR BY: HFW			
WWA NUMBER: 221028.00	FILE NAME: 102800L_DET.dwg	DISCIPLINE: CIVIL	SCALE: H: AS SHOWN V: N/A	DATE: 4/29/22

M:\221028 Town of Culpeper WWTP Improvements\221028.00 Design\102800L_DET.dwg

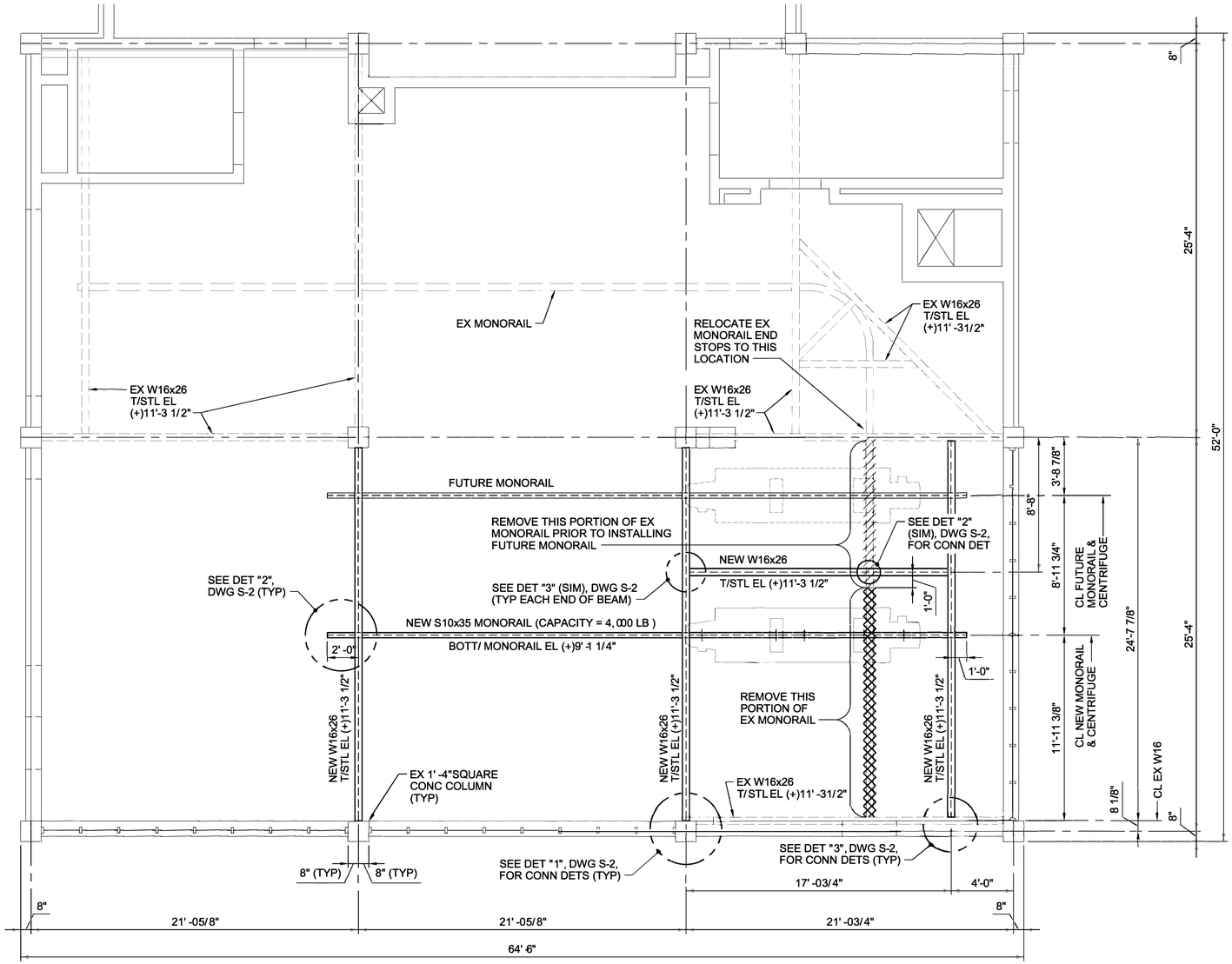

MONORAIL SUPPORT PLAN

SCALE: 1/4"= 1' -0"

NOTES: 1. ALL ELEVATIONS ARE REFERENCED FROM 1ST FLOOR FINISH FLOOR ELEVATION 0' -0".

FOR STRUCTURAL GENERAL NOTES, SEE DWG S-2

NOLEN FRISA ASSOCIATES CONSULTING ENGINEERS
103 HOMESTEAD DRIVE FOREST, VIRGINIA 24551
PHONE (434)385-4390 FAX (434)385-4276

NO.	SHEET REVISION	BY	DATE	NO.	SHEET REVISION	BY	DATE

COMMONWEALTH OF VIRGINIA
H. ANTHONY PACE
Lic. No. 040176
4/29/2022
PROFESSIONAL ENGINEER

WW ASSOCIATES
ENGINEERS SURVEYORS PLANNERS
PO Box 4110 Lynchburg, VA 24502 Phone: 434.316.6080
968 Olympia Drive, Suite 1 Charlottesville, VA 22911 Phone: 434.984.2700
www.wwassociates.net

DESIGNED BY: HAP	PROJECT: WASTEWATER TREATMENT PLANT IMPROVEMENTS TOWN OF CULPEPER, VIRGINIA		SET REV. NO. –
DRAWN BY: KJP	TITLE: SLUDGE BUILDING MONORAIL PLAN		DRAWING NUMBER: S-1
DIHR BY: HFW			
WWA NUMBER: 221028.00	FILE NAME: 22112-01.dwg	DISCIPLINE: STRUCTURAL	SCALE: H: AS SHOWN V: N/A	DATE: 4/29/22

J:\2022\Industrial\22112 Culpeper WWTP Improvements (WW Assoc)\22112-01.dwg

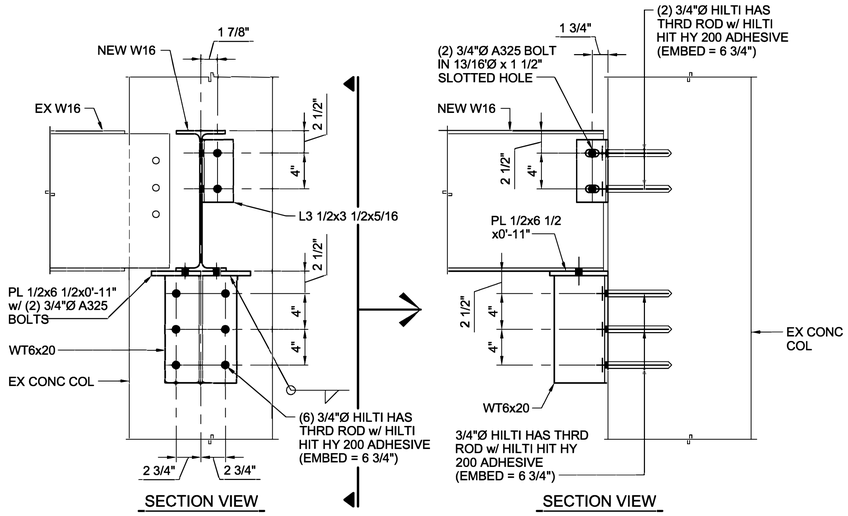

DETAIL "1"

SCALE: 1 1/2" = 1'-0"

REF DWG S-1

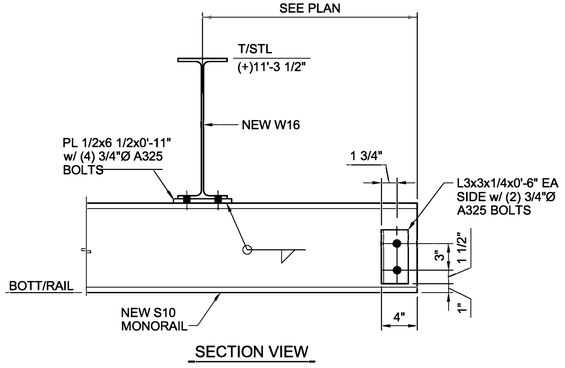

DETAIL "2"

SCALE: 1 1/2" = 1'-0"

REF DWG S-1

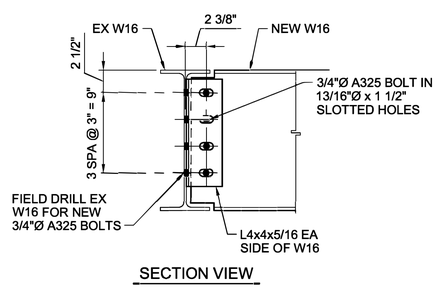

DETAIL "3"

SCALE: 1 1/2" = 1'-0"

REF DWG S-1

STRUCTURAL GENERAL NOTES:

1. THE CONTRACTOR SHALL FIELD VERIFY ALL CONDITIONS AND ELEVATIONS OF EXISTING CONSTRUCTION AS RELATED TO NEW CONSTRUCTION PRIOR TO PLACING NEW CONCRETE, AND FABRICATION AND ERECTION OF NEW STEEL FRAMING, PLATE, DECK, GUARDRAILS, AND GRATING. ADJUST FOR MINOR DIMENSIONAL DIFFERENCES AS REQUIRED. NOTIFY PROJECT ENGINEER OF ANY SIGNIFICANT DIFFERENCES AND OBTAIN RESOLUTION BEFORE PROCEEDING WITH AFFECTED WORK.

2. ALL ELEVATIONS SHOWN ON THE STRUCTURAL DRAWINGS ARE REFERENCED FROM EXISTING FIRST FLOOR ELEVATION 0'-0".

3. PROTECT EXISTING EQUIPMENT AND OPERATIONS BELOW CONSTRUCTION FROM DAMAGE DURING DEMOLITION, STEEL ERECTION, AND FIELD WELDING.

4. ALL DEMOLISHED STRUCTURAL MATERIAL SHALL BE DISPOSED OF OFF SITE BY THE CONTRACTOR IN ACCORDANCE WITH APPLICABLE FEDERAL, STATE AND LOCAL REGULATIONS. THERE ARE NO KNOWN HAZARDOUS MATERIALS IN THE STRUCTURAL DEMOLITION WORK.

5. UNLESS NOTED OTHERWISE, ADHESIVE ANCHORS FOR CONCRETE SHALL BE HILTI HIT_HY 200 SAFE SET SYSTEM WITH HILTI HOLLOW DRILL BIT AND VC 150/300 VACUUM WITH HILTI HAS_V_36 (OR HAS_V_36 HDG, OR HAS_E_55, OR HAS_B_105, OR HAS_B_105 HDG, OR HAS_R 304 SS, OR HAS_R 316 SS) CONTINUOUSLY THREADED ROD PER ICC ESR_3187 AS MANUFACTURED BY HILTI INC. (www.hilti.com). ANCHOR ROD DIAMETER AND EMBEDMENT DEPTH SHALL BE AS NOTED ON THE DRAWINGS. INSTALL ANCHORS PER THE MANUFACTURER PRINTED INSTALLATION INSTRUCTION, AS INCLUDED IN THE ANCHOR PACKAGING.

6. AT TIME OF ADHESIVE ANCHOR INSTALLATION, TEMPERATURE OF BASE MATERIAL SHALL NOT BE LESS THAN 23 DEGREES FAHRENHEIT AND SHALL NOT BE GREATER THAN 104 DEGREES FAHRENHEIT.

7. EXISTING REINFORCING BARS IN THE BUILDING STRUCTURE MAY CONFLICT WITH SPECIFIED POST-INSTALLED ANCHOR LOCATIONS. UNLESS NOTED ON THE DRAWINGS THAT THE BARS MAY BE CUT, THE CONTRACTOR SHALL REVIEW EXISTING STRUCTURAL DRAWINGS AND SHALL UNDERTAKE TO LOCATE THE POSITION OF THE REINFORCING BARS AT THE LOCATION OF THE ANCHORS BY HILTI FERROSCAN, GROUND PENETRATING RADAR, X-RAY, OR OTHER NON_DESTRUCTIVE MEANS AND ADJUST ANCHOR LOCATIONS AS REQUIRED.

8. ALL NEW STRUCTURAL STEEL SHALL BE FABRICATED AND ERECTED IN ACCORDANCE WITH AISC SPECIFICATIONS AND SHALL CONFORM TO THE FOLLOWING:
   W AND S-SHAPES - ASTM A992 (Fy = 50 KSI)
   ANGLES & PLATE - ASTM A36 (Fy = 36 KSI)

9. FIELD DRILL ALL NEW HOLES REQUIRED IN EXISTING STEEL. <u>NO HOLE BURNING IS ALLOWED.</u>

10. NEW STRUCTURAL STEEL SHALL RECEIVE (1) COAT OF RED OXIDE PRIMER AFTER FABRICATION. FIELD PAINTING OF NEW STRUCTURAL STEEL AFTER ERECTION IS COMPLETE SHALL BE PER OWNER'S INSTRUCTIONS.

11. PAINT ON STRUCTURAL STEEL DAMAGED BY HANDLING, ERECTION, WELDING, OR DRILLING SHALL BE POWER TOOL CLEANED IN ACCORDANCE WITH SSPC-SP-3 AND REPAIRED WITH (2) COATS OF PAINT PER STRUCTURAL GENERAL NOTE "10".

12. ALL BOLTED CONNECTIONS SHALL BE IN ACCORDANCE WITH RCSC 2014 "SPECIFICATION FOR STRUCTURAL JOINTS USING HIGH_STRENGTH BOLTS". UNLESS NOTED OTHERWISE, ALL BOLTED CONNECTIONS SHALL BE MADE USING 3/4 INCH DIAMETER ASTM F3125, GRADE A325, TYPE N OR X BOLTS IN STANDARD 13/16-INCH DIAMETER HOLES. HEAVY HEX NUTS SHALL BE IN ACCORDANCE WITH ASTM A563. WASHERS SHALL BE IN ACCORDANCE WITH ASTM F436. UNLESS NOTED OTHERWISE, ALL BOLTING HARDWARE SHALL BE GALVANIZED.

13. ALL WELDING OF STRUCTURAL STEEL SHALL BE MADE USING E70XX ELECTRODES AND SHALL BE IN ACCORDANCE WITH AWS SPECIFICATION D1.1. MINIMUM WELD SHALL BE 3/16-INCH FILLET WELD, UNLESS NOTED ON THE DRAWINGS. COMPLETE SEALING OF ALL WELDED SURFACES IS REQUIRED WHERE POSSIBLE.

14. MONORAIL CAPACITY SHALL BE STENCILED IN 3-INCH HIGH BLOCK STYLE LETTERS ON EACH SIDE OF EACH MONORAIL. CAPACITY SHALL BE GIVEN IN POUNDS.

SPECIAL INSPECTIONS:

SPECIAL INSPECTIONS FOR STRUCTURAL ELEMENTS OF THIS PROJECT ARE REQUIRED AS LISTED IN CHAPTER 17 OF THE VIRGINIA CONSTRUCTION CODE (IBC 2018 WITH VIRGINIA AMENDMENTS). SUCH INSPECTIONS ARE TO BE PERFORMED BY A QUALIFIED INDEPENDENT TESTING AGENCY RETAINED BY THE OWNER. TESTING PROCEDURES SHALL BE REVIEWED BY THE ARCHITECT, STRUCTURAL ENGINEER OF RECORD, GENERAL CONTRACTOR AND THE OWNER PRIOR TO CONDUCTING INSPECTIONS AND TESTS. THE TESTING AGENCY SHALL PROVIDE WRITTEN REPORTS/RECORDS OF ALL INSPECTIONS TO THE OWNER, ARCHITECT, STRUCTURAL ENGINEER OF RECORD, AND THE BUILDING OFFICIAL, NOTING COMPLIANCE OR NON-COMPLIANCE WITH REQUIREMENTS OF THE CONSTRUCTION DOCUMENTS AND WITH APPLICABLE CODE DOCUMENTS.

SPECIAL INSPECTIONS OF NON-STRUCTURAL COMPONENTS, SUCH AS EIFS, FIRE PROOFING, ETC., MAY ALSO BE REQUIRED, DEPENDING ON THE APPLICATION PRESENT. SEE ARCHITECTURAL DRAWINGS FOR NON-STRUCTURAL SPECIAL INSPECTION REQUIREMENTS.

STRUCTURAL INSPECTIONS SHALL AT A MINIMUM INCLUDE THE FOLLOWING, WITH ADDITIONAL INSPECTIONS AS MAY BE REQUIRED BY THE BUILDING OFFICIAL:

A. STRUCTURAL STEEL, TO INCLUDE COMPLIANCE WITH MATERIAL SPECIFICATIONS AND ERECTION TOLERANCES, AND CONNECTIONS, TO INCLUDE BOTH WELDED AND BOLTED CONNECTIONS (REF VCC SECTION 1705.2).

1. MATERIAL VERIFICATION OF HIGH STRENGTH BOLTS, NUTS AND WASHERS TO INCLUDE VERIFICATION OF IDENTIFICATION MARKINGS CONFORMING TO ASTM SPECIFICATION REQUIRED BY CONSTRUCTION DOCUMENTS.

2. WELDED CONNECTION INSPECTION SHALL INCLUDE VISUAL INSPECTION OF WELDS PER AWS SPECIFICATION D1.1. PERIODIC INSPECTION IS REQUIRED FOR SINGLE-PASS FILLET WELDS LESS THAN OR EQUAL TO 5/16-INCH.

3. BOLTED CONNECTION INSPECTION SHALL COMPLY WITH REQUIREMENTS OF RCSC "SPECIFICATION FOR STRUCTURAL JOINTS USING HIGH-STRENGTH BOLTS". (NOTE: NO SLIP-CRITICAL CONNECTIONS ARE USED ON THIS PROJECT).

UPON COMPLETION OF THE SPECIAL INSPECTIONS, THE SPECIAL INSPECTIONS TESTING AGENCY SHALL PROVIDE A STATEMENT OF FINAL SPECIAL INSPECTIONS AS REQUIRED BY CHAPTER 17 OF THE VIRGINIA CONSTRUCTION CODE. UPON RECEIPT AND REVIEW OF THIS STATEMENT, THE STRUCTURAL ENGINEER OF RECORD WILL PROVIDE A FINAL SPECIAL INSPECTIONS VERIFICATION STATEMENT FOR THE PROJECT. BOTH OF THE FINAL INSPECTIONS STATEMENTS SHALL BE SEALED BY A PROFESSIONAL ENGINEER WITH CURRENT REGISTRATION IN VIRGINIA.

NOLEN FRISA ASSOCIATES
CONSULTING ENGINEERS
103 HOMESTEAD DRIVE FOREST, VIRGINIA 24551
PHONE (434)385-4390 FAX (434)385-4276

NO.	SHEET REVISION	BY	DATE	NO.	SHEET REVISION	BY	DATE

COMMONWEALTH OF VIRGINIA
H. ANTHONY PACE
Lic. No. 040176
4/29/2022
PROFESSIONAL ENGINEER

WWA ENGINEERS SURVEYORS PLANNERS ASSOCIATES
PO Box 4119 Lynchburg, VA 24502 Phone: 434.316.6080
968 Olympia Drive, Suite 1 Charlottesville, VA 22911 Phone: 434.984.2700
www.wwassociates.net

DESIGNED BY: HAP	PROJECT: WASTEWATER TREATMENT PLANT IMPROVEMENTS TOWN OF CULPEPER, VIRGINIA		SET REV. NO. —
DRAWN BY: KJP	TITLE: SLUDGE BUILDING MONORAIL DETAILS & NOTES		DRAWING NUMBER: S-2
DIHR BY: HFW			
WWA NUMBER: 221028.00	FILE NAME: 22112-01.dwg	DISCIPLINE: STRUCTURAL	SCALE: H: AS SHOWN V: N/A	DATE: 4/29/22

J:\2022\Industrial\22112 Culpeper WWTP Improvements (WW Assoc)\22112-01.dwg

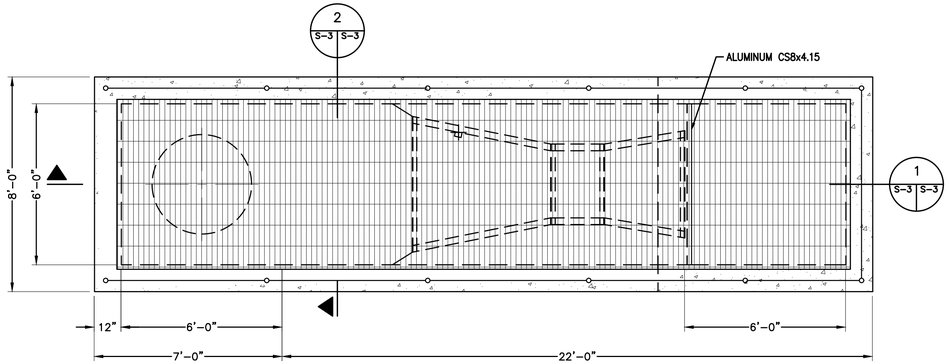

PLAN-TOP FLUME
SCALE: 3/8"=1'-0"

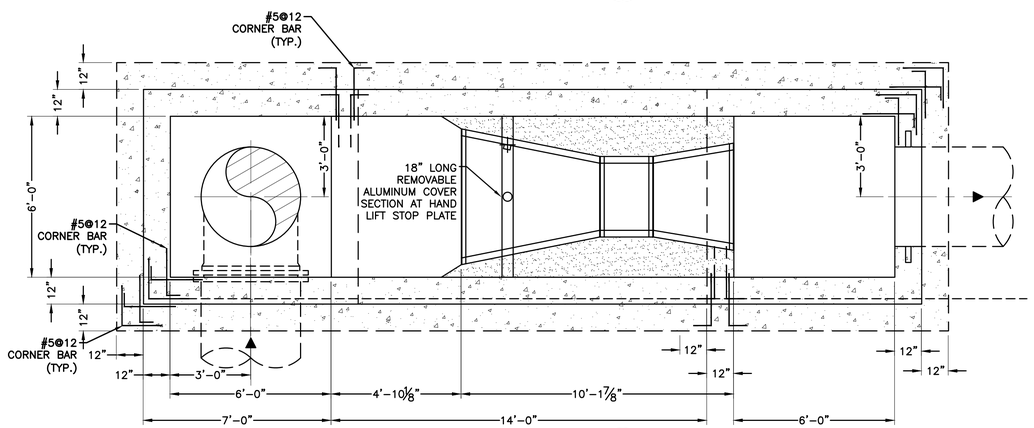

PLAN-BOTTOM FLUME
SCALE: 3/8"=1'-0"

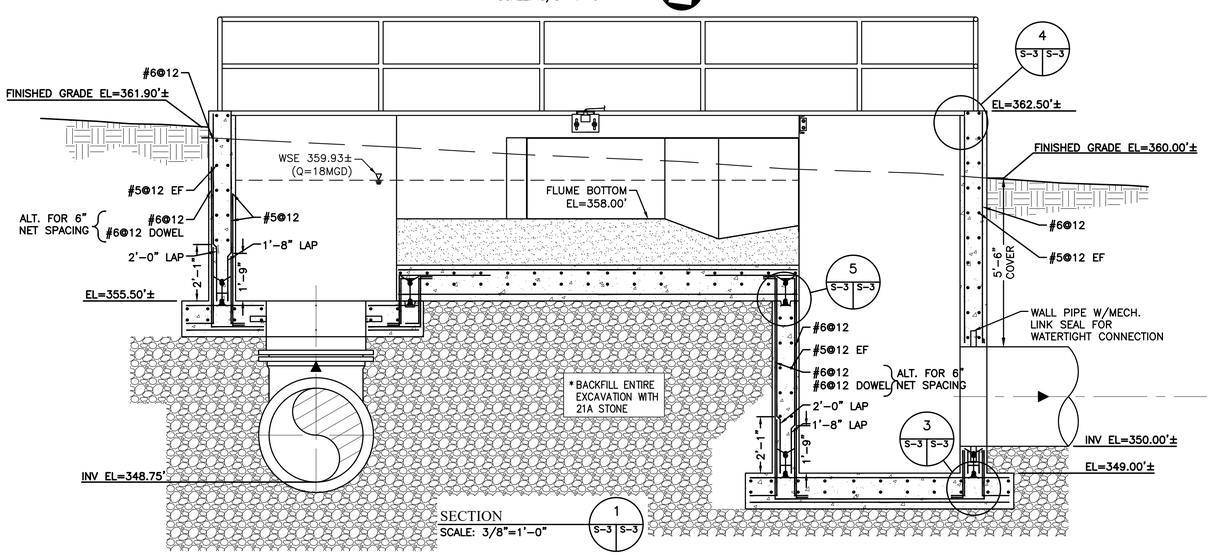

SECTION
SCALE: 3/8"=1'-0"

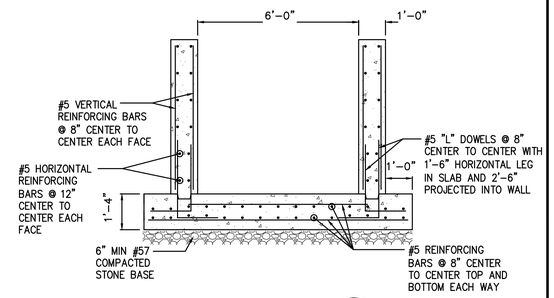

SECTION
SCALE: 3/8"=1'-0"

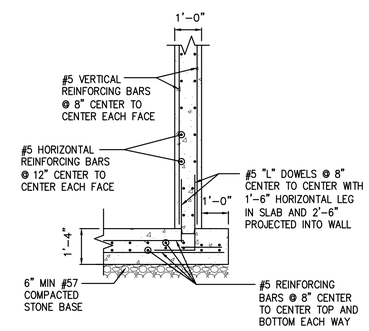

SECTION
SCALE: 3/8"=1'-0"

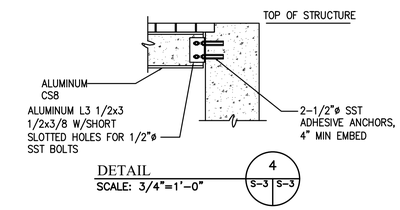

DETAIL
SCALE: 3/4"=1'-0"
4
S-3 S-3

IF THIS DRAWING IS A REDUCTION
GRAPHIC SCALE MUST BE USED

0 6" 1'-0" 2'-0"

SCALE: 3/4" = 1'-0"

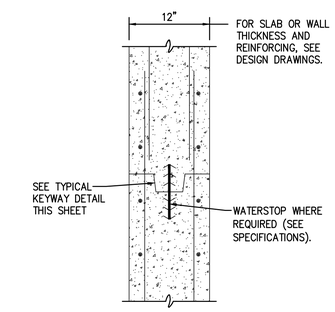

DETAIL-TYPICAL SLAB OR
WALL CONSTRUCTION JOINT
SCALE: NOT TO SCALE
5
S-3 S-3

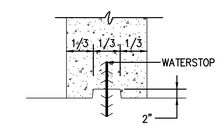

DETAIL-TYPICAL KEYWAY
SCALE: NOT TO SCALE

IF THIS DRAWING IS A REDUCTION
GRAPHIC SCALE MUST BE USED

0 1' 3' 6'

SCALE: 3/8" = 1'-0"

NO.	SHEET REVISION	BY	DATE	NO.	SHEET REVISION	BY	DATE

COMMONWEALTH OF VIRGINIA
JASON A. CLARK
Lic. No. 33605
4/29/2022
PROFESSIONAL ENGINEER

WW ASSOCIATES
ENGINEERS SURVEYORS PLANNERS
PO Box 4119 Lynchburg, VA 24502 Phone: 434.316.6080
968 Olympia Drive, Suite 1 Charlottesville, VA 22911 Phone: 434.984.2700
WWW.WWASSOCIATES.NET

DESIGNED BY: JAC	PROJECT: WASTEWATER TREATMENT PLANT IMPROVEMENTS TOWN OF CULPEPER, VIRGINIA		SET REV. NO. –
DRAWN BY: DJC/WAM	TITLE: PARSHALL FLUME CHAMBER PLANS & SECTIONS		DRAWING NUMBER: S-4
DIHR BY: HFW			
WWA NUMBER: 221028.00	FILE NAME: 102800L_ST4.dwg	DISCIPLINE: STRUCTURAL	SCALE: H: AS SHOWN V: N/A	DATE: 4/29/22

M:\221028 Town of Culpeper WWTP Improvements\221028.00 Design\102800L_ST4.dwg

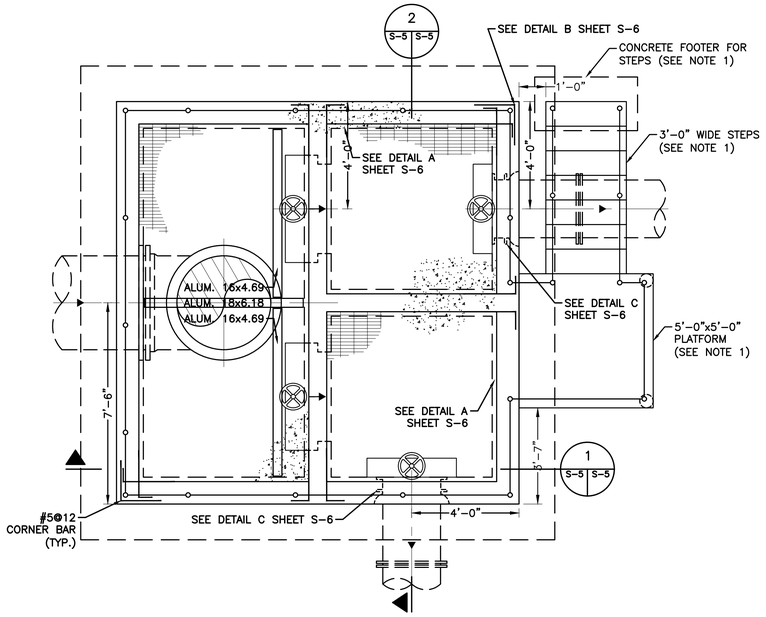

PLAN
SCALE: 3/8"=1'-0"

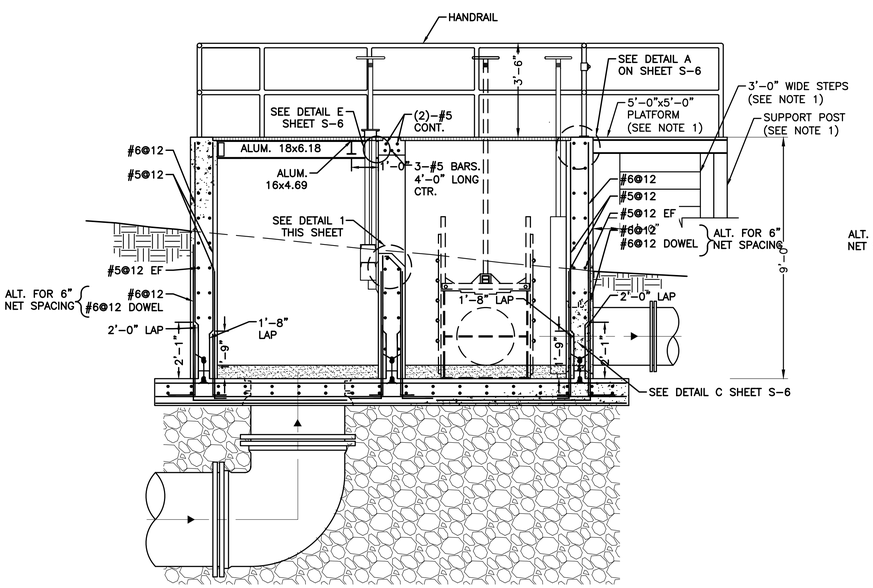

SECTION
SCALE: 3/8"=1'-0"
1
S-5 S-5

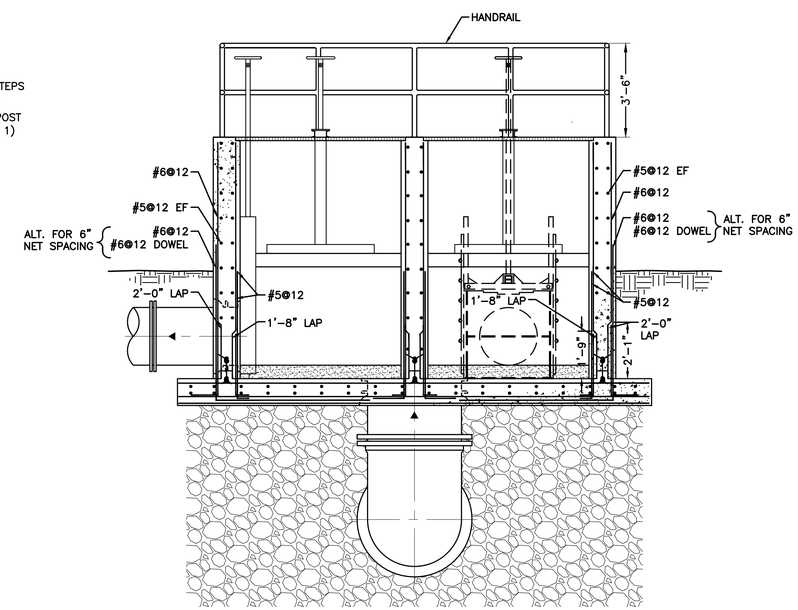

SECTION
SCALE: 3/8"=1'-0"
2
S-4 S-4

NOTES:

1. PLATFORM, STEPS, AND RELATED FOUNDATIONS ARE DELEGATED DESIGN. SEE PROJECT SPECIFICATION SECTION 05500.

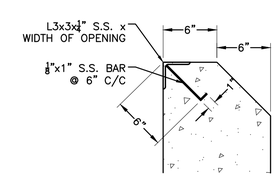

DETAIL
SCALE: NOT TO SCALE
1
S-5 S-5

IF THIS DRAWING IS A REDUCTION GRAPHIC SCALE MUST BE USED

0 1' 3' 6'

SCALE: 3/8" = 1'-0"

NO.	SHEET REVISION	BY	DATE	NO.	SHEET REVISION	BY	DATE

COMMONWEALTH OF VIRGINIA
JASON A. CLARK
Lic. No. 33605
4/29/2022
PROFESSIONAL ENGINEER

WWA ENGINEERS SURVEYORS PLANNERS ASSOCIATES
PO Box 4119 Lynchburg, VA 24502 Phone: 434.316.6080
968 Olympia Drive, Suite 1 Charlottesville, VA 22911 Phone: 434.984.2700
www.wwassociates.net

DESIGNED BY: JAC	PROJECT: WASTEWATER TREATMENT PLANT IMPROVEMENTS TOWN OF CULPEPER, VIRGINIA		SET REV. NO. –
DRAWN BY: WAM	TITLE: PRIMARY CLARIFIER SPLITTER BOX PLAN & SECTIONS		DRAWING NUMBER: S-5
DIHR BY: HFW			
WWA NUMBER: 221028.00	FILE NAME: 102800L_ST5.dwg	DISCIPLINE: STRUCTURAL	SCALE: H: AS SHOWN V: N/A	DATE: 4/29/22

M:\221028 Town of Culpeper WWTP Improvements\221028.00 Design\102800L_ST5.dwg

NOTES:

1. ALUMINUM SURFACES EXPOSED TO CONCRETE SHALL BE ISOLATED USING BITUMASTIC COATING.

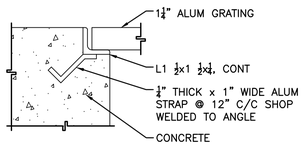

SECTION VIEW

DETAIL A - SECTION (GRATING LEDGE)
SCALE: NOT TO SCALE

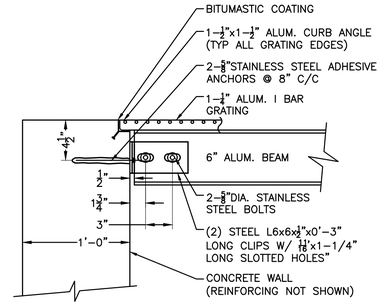

DETAIL D
SCALE: NOT TO SCALE

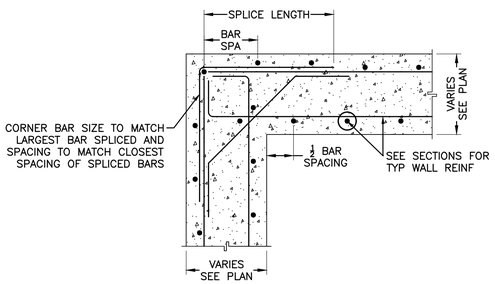

CORNER DETAIL CONDITION

DETAIL B (PLAN-TYP REINF AT CONC WALL INTERSECTIONS)
SCALE: NOT TO SCALE

NOTE:

USE SAME CONNECTION AS OTHER END OF 8" BEAM.

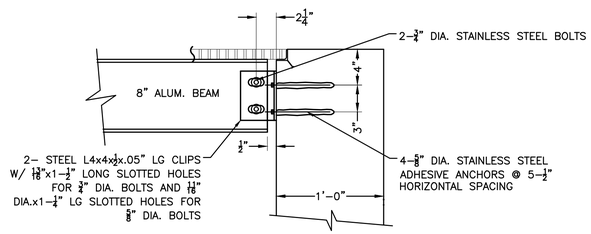

DETAIL E
SCALE: NOT TO SCALE

NOTES:

1. SEE CIVIL DRAWINGS AND SPECIFICATIONS FOR EXACT PRODUCT TYPE AND MATERIALS FOR PIPE SLEEVE AND PIPE LINK-SEAL REQUIRED

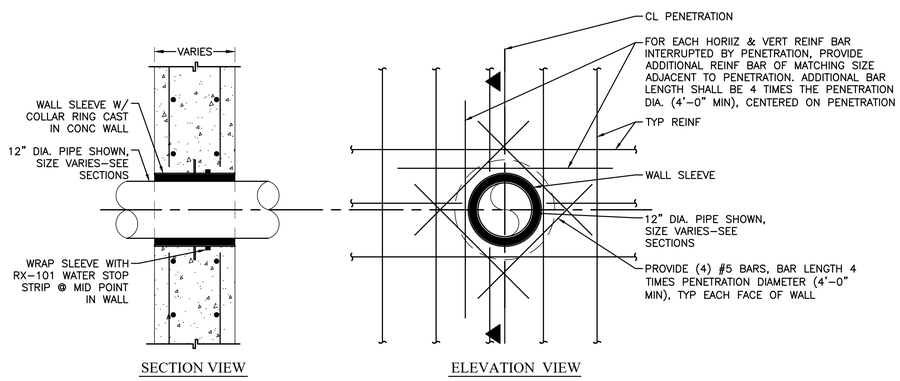

SECTION VIEW ELEVATION VIEW

DETAIL C - PIPE PENETRATIONS THRU WALL
SCALE: NOT TO SCALE

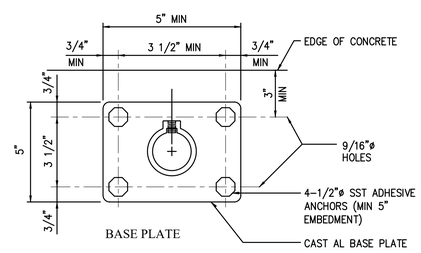

BASE PLATE

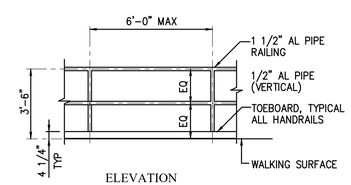

ELEVATION

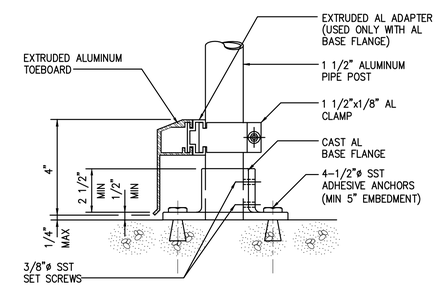

MOUNTING DETAIL

ALUMINUM HANDRAILS
SCALE: NOT TO SCALE

NO.	SHEET REVISION	BY	DATE

NO.	SHEET REVISION	BY	DATE

COMMONWEALTH OF VIRGINIA
JASON A. CLARK
Lic. No. 33605
4/29/2022
PROFESSIONAL ENGINEER

WW ASSOCIATES
ENGINEERS SURVEYORS PLANNERS
PO Box 4119 Lynchburg, VA 24502 Phone: 434.316.6080
968 Olympia Drive, Suite 1 Charlottesville, VA 22911 Phone: 434.984.2700
WWW.WWASSOCIATES.NET

DESIGNED BY: JAC	PROJECT: WASTEWATER TREATMENT PLANT IMPROVEMENTS TOWN OF CULPEPER, VIRGINIA		SET REV. NO. –
DRAWN BY: WAM	TITLE: STRUCTURAL DETAILS		DRAWING NUMBER: S-6
DIHR BY: HFW			
WWA NUMBER: 221028.00	FILE NAME: 102800L_ST6.dwg	DISCIPLINE: STRUCTURAL	SCALE: H: AS SHOWN V: N/A	DATE: 4/29/22

M:\221028 Town of Culpeper WWTP Improvements\221028.00 Design\102800L_ST6.dwg

LEGEND - P&I DIAGRAM

- XXX YYY — FIELD MOUNTED INSTRUMENT XXX INDICATES TYPE OF INSTRUMENT
- XXX YYY — FRONT-OF-PANEL MOUNTED INSTRUMENT – NORMALLY ACCESSIBLE TO OPERATOR
- VIRTUAL DEVICE (INTERNAL TO PLC)
- COMPUTER INSTRUMENTATION FUNCTION (VIRTUAL INSTRUMENT – ACCESSIBLE TO OPERATOR AT SCADA COMPUTER)
- XX — PLC I/O POINT – XX INDICATES I/O TYPE
- MM — MAGNETIC FLOW METER
- TMFM — THERMAL MASS FLOW METER
- PI — PRESSURE GAUGE
- AUDIBLE ALARM DEVICE ON CONTROL PANEL
- M — MOTOR
- PLUG VALVE
- BUTTERFLY VALVE
- PINCH VALVE
- BALL VALVE
- CHECK VALVE
- THROTTLING VALVE
- ELECTRICALLY OPERATED 2-WAY SOLENOID VALVE
- ELECTRICALLY OPERATED 2-WAY PLUG VALVE
- ELECTRICALLY OPERATED PINCH VALVE
- ELECTRICALLY OPERATED SLUICE GATE
- PUMP
- PIPING OR EQUIPMENT–PART OF PROCESS FLOW
- ELECTRICAL SIGNAL
- SIGNAL INTERNAL TO COMPUTER OR PLC
- UNGUIDED ELECTROMAGNETIC OR SONIC SIGNAL
- SUBMERSIBLE MIXER
- COMMUNICATION HIGHWAY (ETHERNET)

NOTES:

1. ALL ABBREVIATIONS AND SYMBOLS SHOWN MAY NOT BE USED.
2. P&I DRAWINGS DO NOT INDICATE ALL PIPING AND VALVE ARRANGEMENTS. SEE DETAILED CIVIL DRAWINGS FOR ACTUAL PIPING AND VALVE ARRANGEMENTS. SEE SPEC. SECTION 13709 FOR ADDITIONAL INFORMATION ON SEQUENCE OF OPERATION.
3. CONTRACTOR SHALL PROVIDE ALL CONTROL, POWER, AND STATUS WIRING, DEDICATED CONDUIT, AND ASSOCIATED ELECTRICAL EQUIPMENT FROM FIELD DEVICES TO PANEL MOUNTED DEVICES AND PROGRAMMABLE LOGIC CONTROLLERS TO PERFORM FUNCTIONS INDICATED AND SPECIFIED. ALL POWER AND CONTROL WIRING SHALL BE INSTALLED IN SEPARATE CONDUITS. SEE SPEC. SECTION 13700 FOR ADDITIONAL INFORMATION ON CONTRACTOR RESPONSIBILITIES.
4. CONTRACTOR, IC SUBCONTRACTOR, AND ELECTRICAL SUBCONTRACTOR SHALL COORDINATE ALL CONSTRUCTION ACTIVITIES WITH EACH OTHER TO ENSURE COMPLETE, FULLY OPERABLE CONTROL SYSTEMS ARE PROVIDED.
5. CONTRACTOR IS ADVISED RAS PUMP STATION NO. 1 WILL BE DEMOLISHED AS PART OF THIS PROJECT. PROVIDE COMMUNICATIONS MANHOLE WITH WIRING AND CONDUIT AS REQUIRED AT THIS APPROXIMATE LOCATION TO MAINTAIN EXISTING DATA HIGHWAY FOR SCADA NETWORK. MANHOLE AND WIRING SHALL BE COMPLETE AND FULLY FUNCTIONAL PRIOR TO DEMOLITION OF RAS PUMP STATION NO. 1. SEE SITE UTILITY DRAWINGS FOR RAS PUMP STATION NO. 1 LOCATION.

ABBREVIATIONS - P&I DIAGRAM

AD	AERATOR DRIVE
AI	ANALOG INPUT
ALM	ALUM
ALT	ALTERNATOR
AO	ANALOG OUTPUT
AM	AMMETER
AMM	AMMONIA PROBE/READOUT (mg/L)
AS	AUTO START
AST	AUTO STOP
ATIS	AUTOMATIC TRANSFER AND INTERLOCK SYSTEM
BLWR	BLOWER
CS	CAUSTIC SODA
DH+	DATA HIGHWAY PLUS
DI	DISCRETE INPUT
DN	DOSAGE SETPOINT INPUT
DO	DISCRETE OUTPUT
DOP	DISSOLVED OXYGEN PROBE/READOUT (mg/L)
EM	EFFLUENT METER
EPS	EFFLUENT PUMP STATION
ES	EMERGENCY STOP
EV	EXCESSIVE VIBRATION
FE	FLOW ELEMENT
FI	FLOW INDICATOR
FIR	FLOW INDICATING RECORDER
FIT	FLOW INDICATING TRANSMITTER
FM	FORCE MAIN
FN	FLOW SETPOINT INPUT
FQIR	FLOW TOTALIZING INDICATOR/RECORDER
FT	FLOW TRANSMITTER
FST	FLOW SETPOINT
GC	GRIT COLLECTOR DRIVE
HOA	HAND/OFF/AUTO
HOR	HAND/OFF/REMOTE
HS	HAND SWITCH
HSK	HAND SWITCH KEYED
IC	INSTRUMENTATION AND CONTROLS
IM	INFLUENT METER
JCAH	TORQUE ALARM HIGH
JS	MOTOR STARTER
KI	TIME MEASUREMENT (HOUR COUNTER)
LDA	LEAK DETECTION ALARM
LDE	LEAK DETECTION ELEMENT
LAH	LEVEL ALARM HIGH
LAL	LEVEL ALARM LOW
LE	LEVEL ELEMENT
LI	LEVEL INDICATOR
LIR	LEVEL INDICATOR RECORDER
LIT	LEVEL INDICATOR TRANSMITTER
LS	LEVEL SWITCH
LSH	LEVEL SWITCH HIGH
LSHH	LEVEL SWITCH HIGH HIGH
LSL	LEVEL SWITCH LOW
LSLL	LEVEL SWITCH LOW LOW
LY	LEVEL RELAY
MC	MICRO C
MIS	MOTION INDICATOR SWITCH
MM	MAGNETIC FLOW METER
MS	MECHANICAL SCREEN
MCC	MOTOR CONTROL CENTER
MV	MOTORIZED VALVE
NI	NITRATE PROBE/READOUT (mg/L)
NPS	NONPOTABLE WATER PUMP STATION
NPW	NONPOTABLE WATER
OF	OUTFALL
OIU	OPERATOR INTERFACE UNIT
OTP	ORTHOPHOSPHATE/READOUT (mg/L)
PF	PLANT FLOW
PLY	POLYMER
PSC	PUMP SPEED CONTROL
PSH	PRESSURE SWITCH HIGH
PSL	PRESSURE SWITCH LOW
RAS	RETURN ACTIVATED SLUDGE
RPS	RAS/WAS PUMP STATION
SA	GENERAL STATUS ALARM
SAN	SANITARY SEWER
SCL	SLUDGE COLLECTOR
SG	SLUICE GATE
SDIAL	SPEED DIFFERENTIAL INDICATOR ALARM LOW
SP	SCUM PUMP
SPS	SUPERNATANT PUMP STATION
SS	SELECTOR SWITCH
SSMH	SANITARY SEWER MANHOLE
TAH	TEMPERATURE ALARM HIGH
TS	TEMPERATURE SWITCH
TMFM	THERMAL MASS FLOW METER
UPS	UNINTERRUPTIBLE POWER SUPPLY
UV	ULTRAVIOLET
VFD	VARIABLE FREQUENCY DRIVE
WAH	TORQUE ALARM HIGH
WAS	WASTE ACTIVATED SLUDGE
WSH	TORQUE SWITCH HIGH
YA	STATUS ALARM
YI	STATUS INDICATION (ON/OFF)
ZI	VALVE INDICATOR
ZN	VALVE POSITION SETPOINT
ZIR	POSITION INDICATOR RECORDER

NO.	SHEET REVISION	BY	DATE	NO.	SHEET REVISION	BY	DATE

COMMONWEALTH OF VIRGINIA
JASON A. CLARK
Lic. No. 33605
4/29/2022
PROFESSIONAL ENGINEER

WWA ASSOCIATES
ENGINEERS SURVEYORS PLANNERS
PO Box 4119 Lynchburg, VA 24502 Phone: 434.316.6080
968 Olympia Drive, Suite 1 Charlottesville, VA 22911 Phone: 434.984.2700
www.wwassociates.net

DESIGNED BY: JAC	PROJECT: WASTEWATER TREATMENT PLANT IMPROVEMENTS TOWN OF CULPEPER, VIRGINIA		SET REV. NO. –
DRAWN BY: DJC	TITLE: PIPING & INSTRUMENTATION DIAGRAM– ABBREVIATIONS & LEGEND		DRAWING NUMBER: I–1
DIHR BY: HFW			
WWA NUMBER: 221028.00	FILE NAME: 102800L_PID–1.dwg	DISCIPLINE: INSTRUMENTATION	SCALE: H: N.T.S. V: N/A	DATE: 4/29/22

M:\221028 Town of Culpeper WWTP Improvements\221028.00 Design\102800L_PID-1.dwg

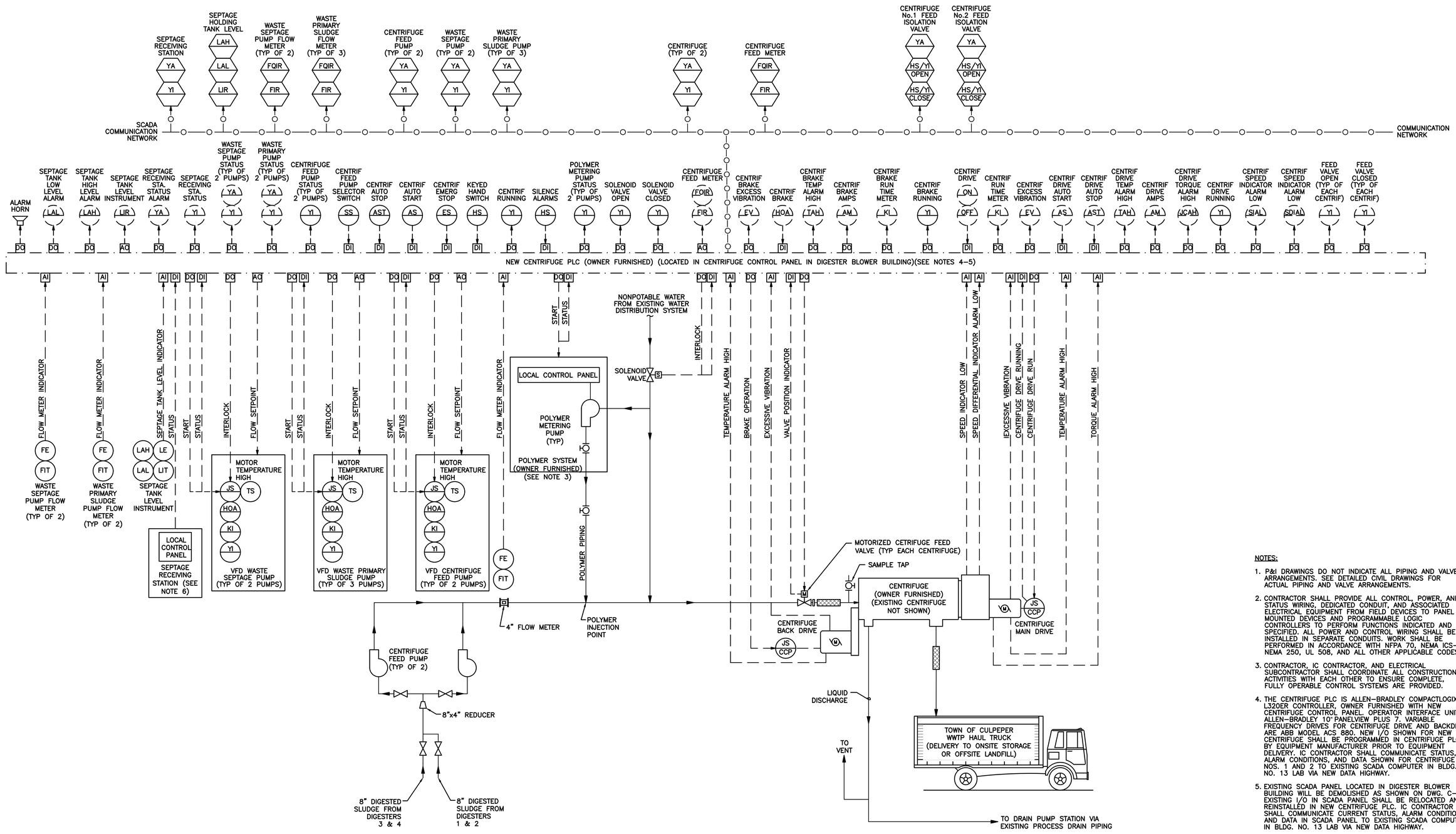

PIPING & INSTRUMENTATION DIAGRAM - NEW CENTRIFUGE

SCALE: NOT TO SCALE

NOTES:

1. P&I DRAWINGS DO NOT INDICATE ALL PIPING AND VALVE ARRANGEMENTS. SEE DETAILED CIVIL DRAWINGS FOR ACTUAL PIPING AND VALVE ARRANGEMENTS.
2. CONTRACTOR SHALL PROVIDE ALL CONTROL, POWER, AND STATUS WIRING, DEDICATED CONDUIT, AND ASSOCIATED ELECTRICAL EQUIPMENT FROM FIELD DEVICES TO PANEL MOUNTED DEVICES AND PROGRAMMABLE LOGIC CONTROLLERS TO PERFORM FUNCTIONS INDICATED AND SPECIFIED. ALL POWER AND CONTROL WIRING SHALL BE INSTALLED IN SEPARATE CONDUITS. WORK SHALL BE PERFORMED IN ACCORDANCE WITH NFPA 70, NEMA ICS–6, NEMA 250, UL 508, AND ALL OTHER APPLICABLE CODES.
3. CONTRACTOR, IC CONTRACTOR, AND ELECTRICAL SUBCONTRACTOR SHALL COORDINATE ALL CONSTRUCTION ACTIVITIES WITH EACH OTHER TO ENSURE COMPLETE, FULLY OPERABLE CONTROL SYSTEMS ARE PROVIDED.
4. THE CENTRIFUGE PLC IS ALLEN–BRADLEY COMPACTLOGIX L320ER CONTROLLER, OWNER FURNISHED WITH NEW CENTRIFUGE CONTROL PANEL. OPERATOR INTERFACE UNIT IS ALLEN–BRADLEY 10" PANELVIEW PLUS 7. VARIABLE FREQUENCY DRIVES FOR CENTRIFUGE DRIVE AND BACKDRIVE ARE ABB MODEL ACS 880. NEW I/O SHOWN FOR NEW CENTRIFUGE SHALL BE PROGRAMMED IN CENTRIFUGE PLC BY EQUIPMENT MANUFACTURER PRIOR TO EQUIPMENT DELIVERY. IC CONTRACTOR SHALL COMMUNICATE STATUS, ALARM CONDITIONS, AND DATA SHOWN FOR CENTRIFUGE NOS. 1 AND 2 TO EXISTING SCADA COMPUTER IN BLDG. NO. 13 LAB VIA NEW DATA HIGHWAY.
5. EXISTING SCADA PANEL LOCATED IN DIGESTER BLOWER BUILDING WILL BE DEMOLISHED AS SHOWN ON DWG. C–17. EXISTING I/O IN SCADA PANEL SHALL BE RELOCATED AND REINSTALLED IN NEW CENTRIFUGE PLC. IC CONTRACTOR SHALL COMMUNICATE CURRENT STATUS, ALARM CONDITIONS, AND DATA IN SCADA PANEL TO EXISTING SCADA COMPUTER IN BLDG. NO. 13 LAB VIA NEW DATA HIGHWAY.
6. IC CONTRACTOR SHALL COMMUNICATE CURRENT STATUS, ALARM CONDITIONS, AND DATA IN NEW LOCAL CONTROL PANEL AT SEPTAGE RECEIVING STATION (AS SHOWN ON SITE UTILITY DRAWINGS) TO NEW CENTRIFUGE PLC AND EXISTING SCADA COMPUTER IN BLDG. No13 LAB VIA NEW DATA HIGHWAYS.

NO.	SHEET REVISION	BY	DATE	NO.	SHEET REVISION	BY	DATE

COMMONWEALTH OF VIRGINIA
JASON A. CLARK
Lic. No. 33605
4/29/2022
PROFESSIONAL ENGINEER

WW ASSOCIATES
ENGINEERS SURVEYORS PLANNERS
PO Box 4119, Lynchburg, VA 24502, Phone: 434.316.6080
968 Olympia Drive, Suite 1, Charlottesville, VA 22911, Phone: 434.984.2700
www.wwassociates.net

DESIGNED BY: JAC	PROJECT: WASTEWATER TREATMENT PLANT IMPROVEMENTS TOWN OF CULPEPER, VIRGINIA		SET REV. NO. –
DRAWN BY: DJC	TITLE: PIPING & INSTRUMENTATION DIAGRAM– NEW CENTRIFUGE		DRAWING NUMBER: I–2
DIHR BY: HFW			
WWA NUMBER: 221028.00	FILE NAME: 102800L_PID–2.dwg	DISCIPLINE: INSTRUMENTATION	SCALE: H: N.T.S. V: N/A	DATE: 4/29/22

M:\221028 Town of Culpeper WWTP Improvements\221028.00 Design\102800L_PID–2.dwg

NOTES:

1. NEW I/O SHOWN FOR NEW AEROBIC DIGESTER NOS. 1 AND 2 SHALL BE PROGRAMMED IN CENTRIFUGE PLC BY IC CONTRACTOR. IC CONTRACTOR SHALL COMMUNICATE STATUS, ALARM CONDITIONS, AND DATA SHOWN FOR NEW AEROBIC DIGESTER NOS. 1 AND 2 TO EXISTING SCADA COMPUTER IN BLDG. NO. 13 LAB VIA NEW DATA HIGHWAY.
2. LOCATED AT SLUDGE THICKENING BLDG. No.9 PER SITE UTILITY DRAWINGS.
3. LOCATED AT BASEMENT OF SLUDGE PROCESSING BLDG. No.12 PER SITE UTILITY DRAWINGS.

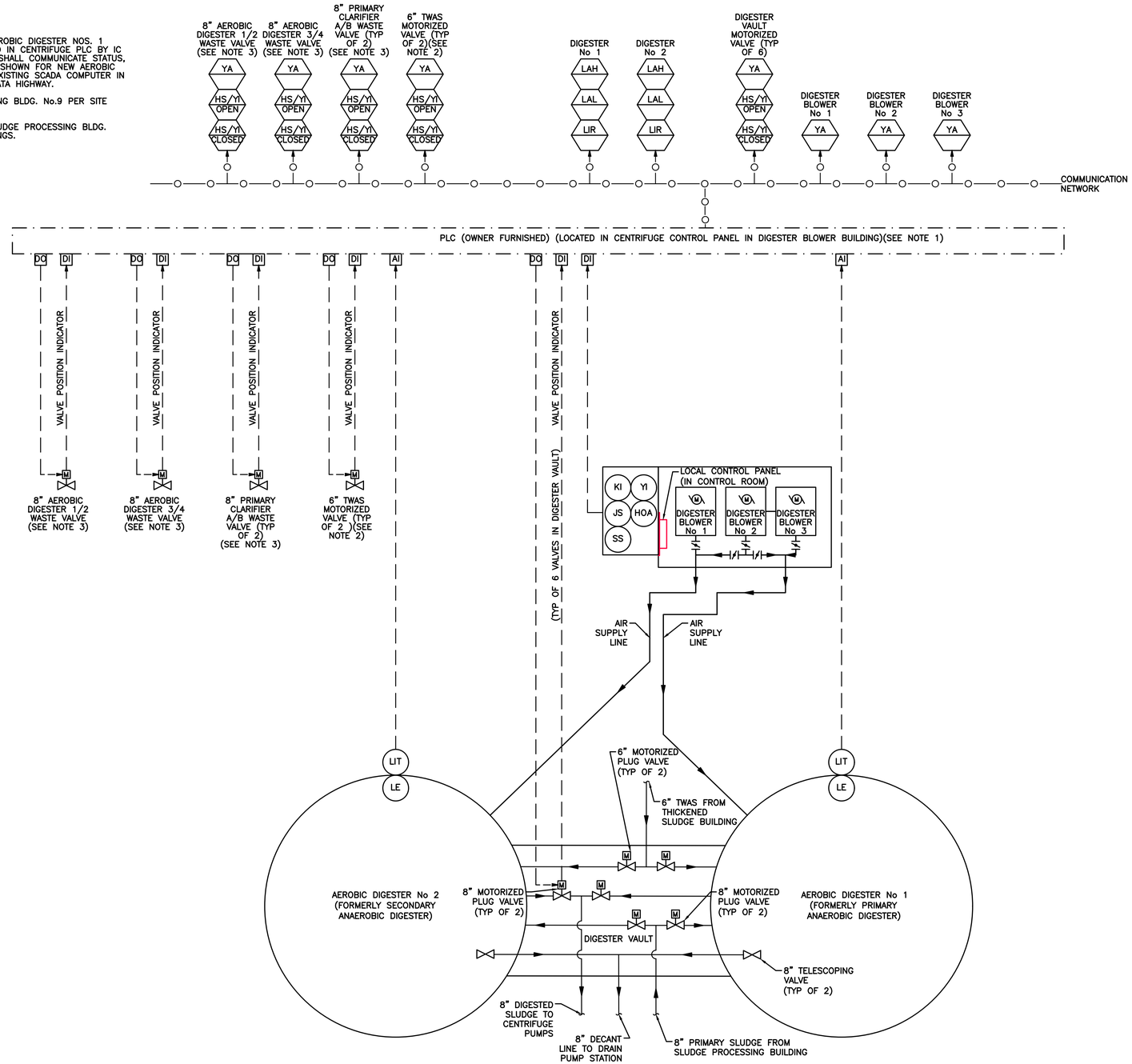

PIPING & INSTRUMENTATION DIAGRAM - AEROBIC DIGESTERS 1&2

SCALE: NOT TO SCALE

NO.	SHEET REVISION	BY	DATE	NO.	SHEET REVISION	BY	DATE

COMMONWEALTH OF VIRGINIA
JASON A. CLARK
Lic. No. 33605
4/29/2022
PROFESSIONAL ENGINEER

WW ASSOCIATES
ENGINEERS SURVEYORS PLANNERS
PO Box 4119, Lynchburg, VA 24502, Phone: 434.316.6080
968 Olympia Drive, Suite 1, Charlottesville, VA 22911, Phone: 434.984.2700
www.wwassociates.net

DESIGNED BY: JAC	PROJECT: WASTEWATER TREATMENT PLANT IMPROVEMENTS TOWN OF CULPEPER, VIRGINIA		SET REV. NO. –
DRAWN BY: DJC	TITLE: PIPING & INSTRUMENTATION DIAGRAM– AEROBIC DIGESTERS 1 & 2		DRAWING NUMBER: I–3
DIHR BY: HFW			
WWA NUMBER: 221028.00	FILE NAME: 102800L_PID–3.dwg	DISCIPLINE: INSTRUMENTATION	SCALE: H: N.T.S. V: N/A	DATE: 4/29/22

M:\221028 Town of Culpeper WWTP Improvements\221028.00 Design\102800L_PID-3.dwg

NOTES:

1. NEW I/O SHOWN FOR NEW AEROBIC DIGESTER NOS. 3 AND 4 SHALL BE PROGRAMMED IN CENTRIFUGE PLC BY IC CONTRACTOR. IC CONTRACTOR SHALL COMMUNICATE STATUS, ALARM CONDITIONS, AND DATA SHOWN FOR NEW AEROBIC DIGESTER NOS. 3 AND 4 TO EXISTING SCADA COMPUTER IN BLDG. NO. 13 LAB VIA NEW DATA HIGHWAY.

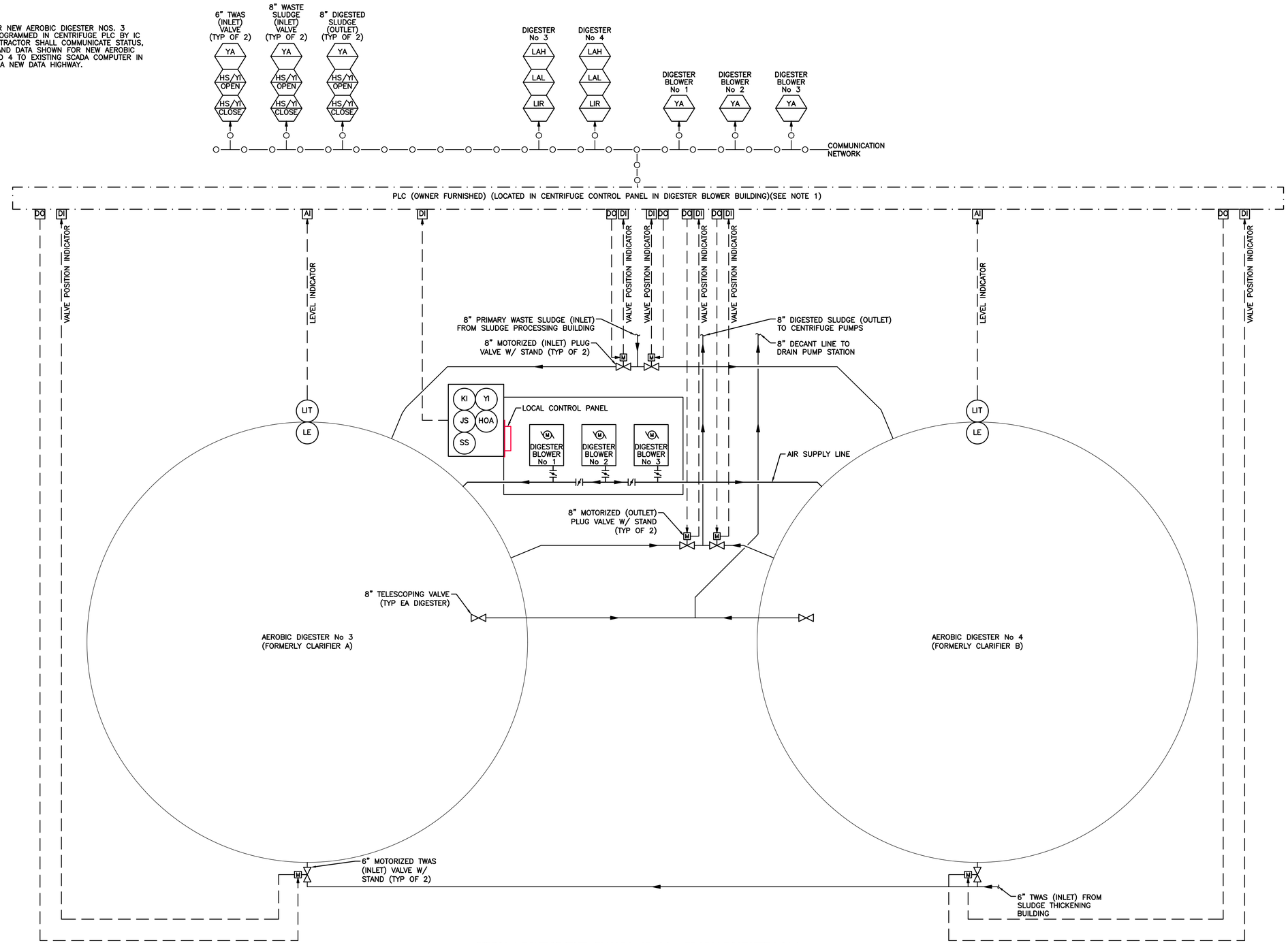

PIPING & INSTRUMENTATION DIAGRAM - AEROBIC DIGESTERS 3&4

SCALE: NOT TO SCALE

NO.	SHEET REVISION	BY	DATE

NO.	SHEET REVISION	BY	DATE

COMMONWEALTH OF VIRGINIA
JASON A. CLARK
Lic. No. 33605
4/29/2022
PROFESSIONAL ENGINEER

WW ASSOCIATES
ENGINEERS SURVEYORS PLANNERS
PO Box 4119, Lynchburg, VA 24502, Phone: 434.316.6080
968 Olympia Drive, Suite 1, Charlottesville, VA 22911, Phone: 434.984.2700
www.wwassociates.net

DESIGNED BY: JAC	PROJECT: WASTEWATER TREATMENT PLANT IMPROVEMENTS TOWN OF CULPEPER, VIRGINIA		SET REV. NO. –
DRAWN BY: DJC	TITLE: PIPING & INSTRUMENTATION DIAGRAM– AEROBIC DIGESTERS 3 & 4		DRAWING NUMBER: I–4
DIHR BY: HFW			
WWA NUMBER: 221028.00	FILE NAME: 102800L_PID–4.dwg	DISCIPLINE: INSTRUMENTATION	SCALE: H: N.T.S. V: N/A	DATE: 4/29/22

M:\221028 Town of Culpeper WWTP Improvements\221028.00 Design\102800L_PID–4.dwg

LEGEND

- CONDUIT RUN EXPOSED
- CONDUIT RUN UNDER CONCRETE FLOOR OR CONCEALED IN WALL
- CONDUIT TURNING UP
- CONDUIT TURNING DOWN
- HOMERUN TO PANELBOARD
- DIRECT BURIED GROUND CONDUCTOR
- FLEXIBLE CONDUIT
- LED LIGHTING FIXTURE SEE LIGHT FIXTURE SCHEDULE FOR DESCRIPTION
- LIGHTING FIXTURE, WALL MOUNTED
- EMERGENCY BATTERY LIGHT
- COMBINATION EXIT/EMERGENCY LIGHT FIXTURE
- S — SINGLE POLE SWITCH
- NEMA 5-20R DUPLEX RECEPTACLE, 18" AFF UON
- M — MOTOR
- J — JUNCTION BOX
- NON-FUSED DISCONNECT SWITCH
- NON-FUSED DISCONNECT SWITCH W/ HOA SWITCH ON COVER
- COMBINATION MAGNETIC STARTER/DISCONNECT SWITCH W/ HOA ON COVER
- M — MANUAL STARTER
- 480/277 VOLT PANELBOARD, SURFACE MOUNTED
- 208/120 VOLT PANELBOARD, SURFACE MOUNTED
- PANEL OR CABINET AS INDICATED
- T — TRANSFORMER
- GROUND ROD, 3/4" DIA x 10' COPPER CLAD

DUCTBANK DETAIL:

- D — DATA/PLC AND ETHERNET CABLE COMMUNICATION DUCT, 3"C
- L — LIGHTING CIRCUITS DUCT
- P — 480V POWER DUCT
- S — SPARE DUCT
- U — UTILITY CONDUCTOR, 4" DUCTS
- X — OCCUPIED DUCT
- G — BCSD #1/0

- B — EXOTHERMIC BOND CONDUCTOR TO CONDUCTOR
- C — EXOTHERMIC BOND CONDUCTOR TO COLUMN OR TANK
- G — BOLTED GROUND CONNECTION
- 1200A — MOLDED CASE CIRCUIT BREAKER, TRIP RATING AS INDICATED
- TRANSFORMER
- GROUND
- NORMALLY OPEN CONTACTS
- M — STARTER COIL
- E — EQUIPMENT CONNECTION

ABBREVIATIONS

A,AMP	AMPERES
AEP	AMERICAN ELECTRIC POWER
AF	AMPERE FRAME
AFF	ABOVE FINISH FLOOR
AFG	ABOVE FINISH GRADE
AHU	AIR HANDLING UNIT
AIC	AMPERES INTERRUPTING CAPACITY
APPROX	APPROXIMATELY
AS	AMPERE SENSOR
AT	AMPERE TRIP
BAS	BUILDING AUTOMATION SYSTEM
BCSD	BARE COPPER SOFT DRAWN
BKR	BREAKER
C	CONDUIT
CKT	CIRCUIT
COMPR	COMPRESSOR
CONN	CONNECTED
CPT	CONTROL POWER TRANSFORMER
CT	CURRENT TRANSFORMER
CU	COPPER
D	DEEP
DISC	DISCONNECT
DIV	DIVISION
DO	DISSOLVED OXYGEN
DOC	DISSOLVED OXYGEN CONTROLLER
DWG	DRAWING
(E)	EXISTING
ECB	ENCLOSED CIRCUIT BREAKER
EGC	EQUIPMENT GROUNDING CONDUCTOR
EL,ELEV	ELEVATION
EQPT	EQUIPMENT
EXIST	EXISTING
(F)	FUTURE
FDR	FEEDER
FLA	FULL LOAD AMPERES
FRACT	FRACTIONAL
FVNR	FULL VOLTAGE NON-REVERSING
GFI	GROUND FAULT INTERRUPTER
GND	GROUND
GRS	GALVANIZED RIGID STEEL
H-O-A	HAND-OFF-AUTO
HP	HORSEPOWER
INTER	INTERMEDIATE
kcmil	THOUSANDS OF CIRCULAR MILS
KV	KILOVOLTS
KVA	KILOVOLT AMPERE
KW	KILOWATTS
LBS	LOAD BREAK SWITCH
LED	LIGHT-EMITTING DIODE
MAX	MAXIMUM
MCC	MOTOR CONTROL CENTER
MCCB	MOLDED CASE CIRCUIT BREAKER
MCP	MOTOR CIRCUIT PROTECTOR
MIN	MINIMUM
NEMA	NATIONAL ELECTRICAL MANUFACTURER'S ASSOCIATION
NEUT	NEUTRAL
NIT	NITRATE
NITC	NITRATE ANALYZER CONTROLLER
OL	OVERLOAD
P	POLES
PH	PHASE
PVC	POLYVINYL CHLORIDE
RCPT(S)	RECEPTACLE(S)
RM	ROOM
RMS	ROOT MEAN SQUARE
RSC	RIGID STEEL CONDUIT
SCH	SCHEDULE
SE	SERVICE ENTRANCE
SQ FT	SQUARE FEET
SO	CONDUIT SEAL-OFF
SYM	SYMMETRICAL
TWSP	TWISTED SHIELDED PAIR
TYP	TYPICAL
UG	UNDERGROUND
UH	UNIT HEATER
UL	UNDERWRITERS LABORATORIES, INC.
ULI	ULTRASONIC LEVEL INSTRUMENT
UON	UNLESS OTHERWISE NOTED
V	VOLT
VA	VOLT AMPERES
VFD	VARIABLE FREQUENCY DRIVE
W	WATT(S), WIRE, WIDE, (AS APPLICABLE)
WP	WEATHERPROOF
XFMR	TRANSFORMER
ϕ, PH	PHASE
1/C	ONE CONDUCTOR
Δ	DELTA CONNECTED
Y	GROUNDED WYE CONNECTED

CONDUCTOR COLOR CODE

CONDUCTOR	208/120V	480/277V
PH A	BLACK	BROWN
PH B	RED	ORANGE
PH C	BLUE	YELLOW
NEUTRAL	WHITE	GRAY
GROUND	GREEN	GREEN

GENERAL NOTES:

GENERAL REQUIREMENTS

1. THESE DRAWINGS ARE SCHEMATIC IN NATURE AND INDICATE THE GENERAL AND APPROXIMATE LOCATION OF EQUIPMENT AND EXISTING CONSTRUCTION. FIELD-VERIFY ALL DIMENSIONS AND LOCATIONS. INDICATED UNDERGROUND OBSTRUCTIONS WERE DEVELOPED FROM EXISTING RECORDS AND ABOVE-GROUND INSPECTION. ACCURACY OR COMPLETENESS OF LOCATION AND DEPTH OF UNDERGROUND UTILITIES AND STRUCTURES CANNOT BE GUARANTEED. VERIFY LOCATION AND DEPTH OF ALL UNDERGROUND FACILITIES BEFORE STARTING WORK.

2. THESE DRAWINGS MAY NOT INDICATE ALL FITTINGS, PARTS AND ACCESSORIES THAT ARE REQUIRED FOR A COMPLETE AND FUNCTIONAL SYSTEM. NO EXCLUSION FROM OR LIMITATION IN THE SYMBOLISM USED ON THE DRAWINGS FOR THE WORK, OR THE LANGUAGE USED IN THE SPECIFICATIONS FOR THE WORK SHALL BE INTERPRETED AS A REASON FOR OMITTING THE APPURTENANCES OR ACCESSORIES NECESSARY TO COMPLETE AND REQUIRED WORK, SYSTEM, OR ITEM OF EQUIPMENT.

3. ALL ELECTRICAL WORK ON THIS PROJECT SHALL BE INSTALLED IN ACCORDANCE WITH THE 2015 VIRGINIA UNIFORM STATEWIDE BUILDING CODE AND THE NFPA 70-2018 (NATIONAL ELECTRICAL CODE).

4. MATERIALS, EQUIPMENT, AND SYSTEMS SHALL MEET ALL PERTINENT REQUIREMENTS OF THE AMERICAN SOCIETY FOR TESTING MATERIALS (ASTM), THE UNDERWRITERS LABORATORY (UL), THE NATIONAL ELECTRIC MANUFACTURER'S ASSOCIATION (NEMA), NATIONAL FIRE PROTECTION ASSOCIATION (NFPA), AMERICAN NATIONAL STANDARDS INSTITUTE (ANSI), AND OTHER NATIONALLY RECOGNIZED AGENCIES.

5. COORDINATE ARRANGEMENT, MOUNTING, AND SUPPORT OF ELECTRICAL EQUIPMENT TO AVOID INTERFERENCES WITH ELECTRICAL AND OTHER TRADES. COORDINATE WORK WITH EXISTING CONDITIONS INCLUDING BEAMS, COLUMNS, SITE FEATURES, AND OTHER CONSTRUCTION WHETHER OR NOT SUCH IS SHOWN ON THE DRAWINGS. SET SLEEVES IN CAST-IN-PLACE CONCRETE AND MASONRY WALLS, AS THEY ARE CONSTRUCTED. COORDINATE LOCATION OF ACCESS PANELS AND DOORS FOR ELECTRICAL EQUIPMENT THAT ARE BEHIND FINISHED SURFACES OR ARE OTHERWISE CONCEALED. COORDINATE AMPACITY, VOLTAGE, PHASING, OVERCURRENT PROTECTION, AND LOCAL DISCONNECT REQUIREMENTS WITH ACTUAL EQUIPMENT PROVIDED.

6. MAINTAIN A SET OF AS-BUILT RED-LINE MARKUPS INDICATING ACTUAL INSTALLATION. DELIVER TO OWNER AT CONCLUSION OF PROJECT.

7. PROVIDE PRODUCT DATA SUBMITTALS FOR THE FOLLOWING EQUIPMENT: MOTOR CONTROL CENTERS, PANELBOARDS, ENCLOSED CONTROLLERS, ENCLOSED SWITCHES, LUMINAIRES, DEVICES AND TRANSFORMERS. MATERIALS INSTALLED PRIOR TO OBTAINING AN APPROVED SUBMITTAL ARE AT CONTRACTOR'S RISK.

8. CUT EXISTING CONSTRUCTION AS NEEDED FOR DEMOLITION AND CONSTRUCTION. USE CUTTING METHODS THAT MINIMIZE DAMAGE TO FINISHED AND ADJACENT SURFACES. PATCH EXISTING AND NEW CONSTRUCTION AND REPAIR ALL DAMAGED SURFACES TO MATCH EXISTING. PATCH UNUSED AND ABANDONED PENETRATIONS.

9. CONTRACTOR SHALL ADVISE A/E IMMEDIATELY OF DISCREPANCIES WITHIN DRAWINGS. MINOR DEVIATIONS FROM THE PLANS MAY BE MADE TO AVOID MINOR CONFLICTS. WHERE MAJOR CONFLICTS ARE ENCOUNTERED, THE AFFECTED WORK SHALL NOT BE INSTALLED UNTIL THE CONFLICT HAS BEEN RESOLVED. THE A/E IS NOT RESPONSIBLE FOR THE CONSEQUENCES OF PROCEEDING WITH WORK BASED ON CONTRACTOR INTERPRETATION OR ON DIRECTION FROM OTHER PARTIES.

10. CONTACT INFORMATION:
    WWTP: TOWN OF CULPEPER:

NO.	SHEET REVISION	BY	DATE	NO.	SHEET REVISION	BY	DATE

COMMONWEALTH OF VIRGINIA
JASON A. CLARK
Lic. No. 33605
4/29/2022
PROFESSIONAL ENGINEER

WW ENGINEERS SURVEYORS PLANNERS ASSOCIATES
PO Box 4119, Lynchburg, VA 24502, Phone: 434.316.6080
968 Olympic Drive, Suite 1, Charlottesville, VA 22901, Phone: 434.984.2700
www.wwassociates.net

DESIGNED BY: WKH
DRAWN BY: STAFF
DIHR BY: HFW
WWA NUMBER: 221028.00

PROJECT: WASTEWATER TREATMENT PLANT IMPROVEMENTS TOWN OF CULPEPER, VIRGINIA

TITLE: LEGEND, ABBREVIATIONS, AND GENERAL NOTES

SET REV. NO. –

DRAWING NUMBER: E–1

FILE NAME:

DISCIPLINE: ELECTRICAL

SCALE: H: N/A V: N/A

DATE: 4/29/22

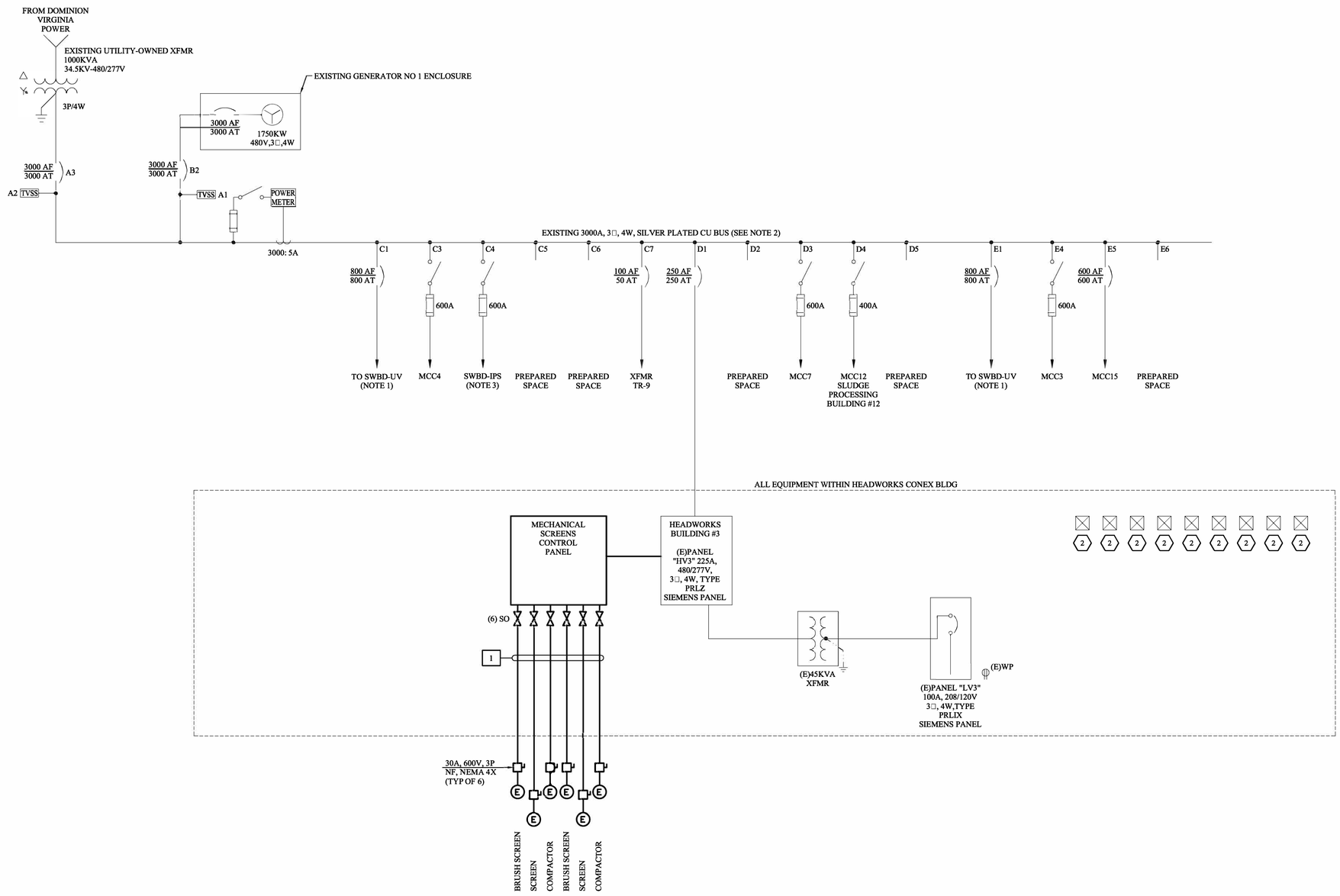

EXISTING SWITCHBOARD BUILDING AND NEW HEADWORKS BUILDING #3 POWER DISTRIBUTION DIAGRAM

SCALE: NONE

DEMOLITION NOTES:

1. EXISTING FEEDER CONDUCTORS FROM SWITCHBOARD TO HEADWORKS FACILITY. THIS WORK IS BEING PERFORMED BY THE FACILITY AND ACTUAL CONDITIONS MIGHT BE DIFFERENT FROM THIS DRAWING.
2. EXISTING LOADS TO BE REMOVED, STARTERS SHALL REMAIN. LABEL SPARE.

CONSTRUCTION NOTES:

1. 3#12, #12 EGC, 3/4"C TO EACH LOAD.
2.

NO.	SHEET REVISION	BY	DATE	NO.	SHEET REVISION	BY	DATE

COMMONWEALTH OF VIRGINIA
JASON A. CLARK
Lic. No. 33605
4/29/2022
PROFESSIONAL ENGINEER

WWA ASSOCIATES
ENGINEERS SURVEYORS PLANNERS
PO Box 4119, Lynchburg, VA 24502, Phone: 434.316.6080
968 Olympia Drive, Suite 1, Charlottesville, VA 22911, Phone: 434.994.2700
www.wwassociates.net

DESIGNED BY: WKH
DRAWN BY: STAFF
DIHR BY: HFW
WWA NUMBER: 221028.00

PROJECT: WASTEWATER TREATMENT PLANT IMPROVEMENTS TOWN OF CULPEPER, VIRGINIA
TITLE: HEADWORKS BUILDING #3 POWER DISTRIBUTION DETAILS
FILE NAME:
DISCIPLINE: ELECTRICAL
SCALE: H: N/A V: N/A
SET REV. NO. –
DRAWING NUMBER: E–2
DATE: 4/29/22

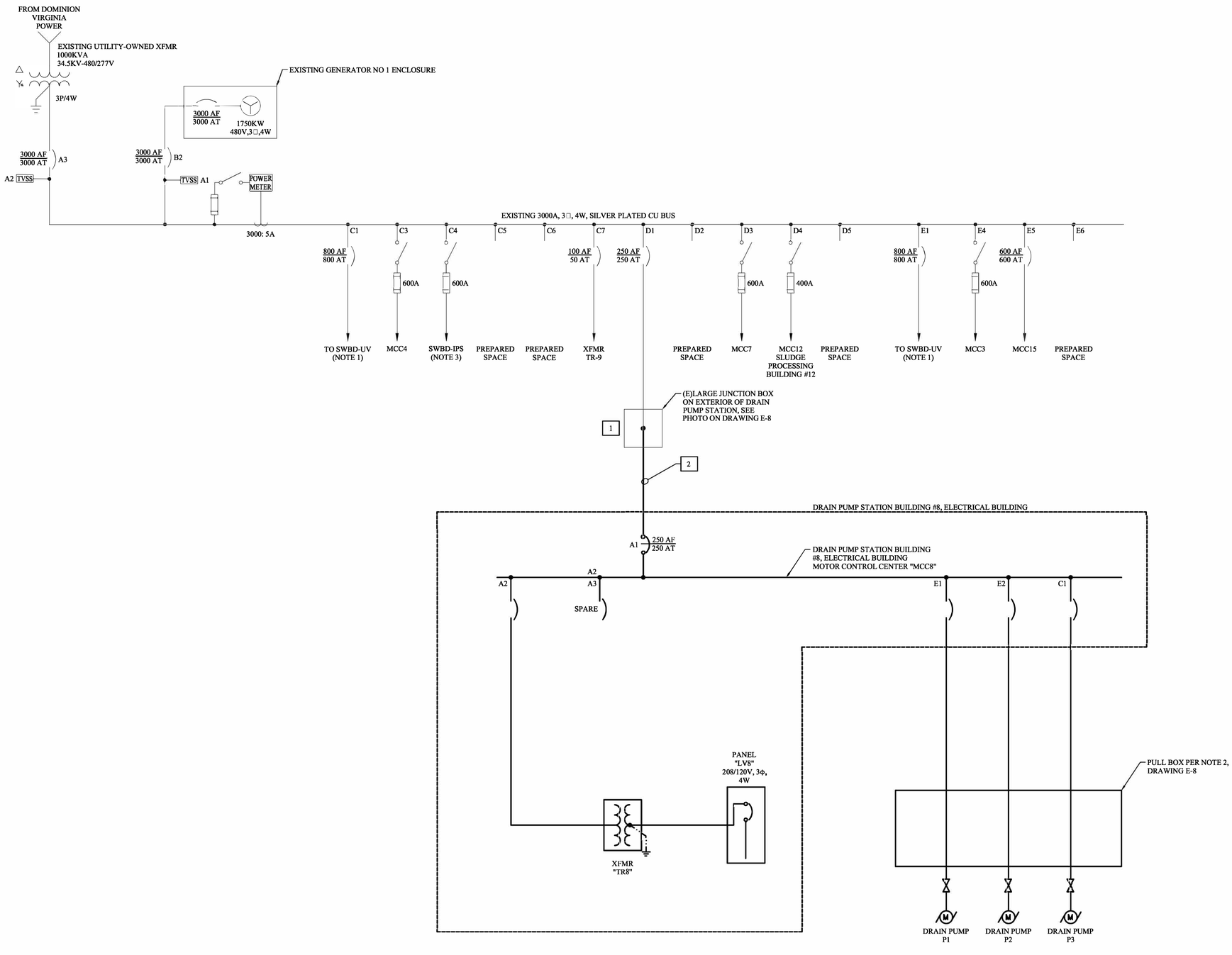

EXISTING SWITCHBOARD BUILDING AND NEW DRAIN PUMP STATION BUILDING #8 POWER DISTRIBUTION DIAGRAM

SCALE: NONE

DEMOLITION NOTES:

1. DEMO ALL ELECTRICAL GEAR, DEVICES, AND LIGHTING WITHIN DRAIN PUMP STATION BUILDING #8 PER CIVIL DRAWINGS.

CONSTRUCTION NOTES:

1. INTERCEPT EXISTING DRAIN PUMP STATION 250 AMP FEED IN EXISTING PULL BOX AND EXTEND FEEDER TO NEW DRAIN PUMP STATION VIA NEW UGE 4" SCHEDULE 80 DUCTS.
2. PROVIDE (2) 4" RSC FROM JUNCTION TO NEW "MCCS". CONDUCTORS SHALL MATCH EXISTING OR 4 #500K AND 2 #2 EGC FOR BIDDING PURPOSES.

NO.	SHEET REVISION	BY	DATE	NO.	SHEET REVISION	BY	DATE

COMMONWEALTH OF VIRGINIA
JASON A. CLARK
Lic. No. 33605
4/29/2022
PROFESSIONAL ENGINEER

WWA ASSOCIATES
ENGINEERS SURVEYORS PLANNERS
PO Box 4119 Lynchburg, VA 24502 Phone: 434.316.6080
968 Olympic Drive, Suite 1 Charlottesville, VA 22911 Phone: 434.984.2700
www.wwassociates.net

DESIGNED BY: WKH	PROJECT: WASTEWATER TREATMENT PLANT IMPROVEMENTS TOWN OF CULPEPER, VIRGINIA		SET REV. NO. –
DRAWN BY: STAFF	TITLE: DRAIN PUMP STATION BUILDING #8 POWER DISTRIBUTION DETAILS		DRAWING NUMBER: E-2.1
DIHR BY: HFW			
WWA NUMBER: 221028.00	FILE NAME:	DISCIPLINE: ELECTRICAL / SCALE: H: N/A V: N/A	DATE: 4/29/22

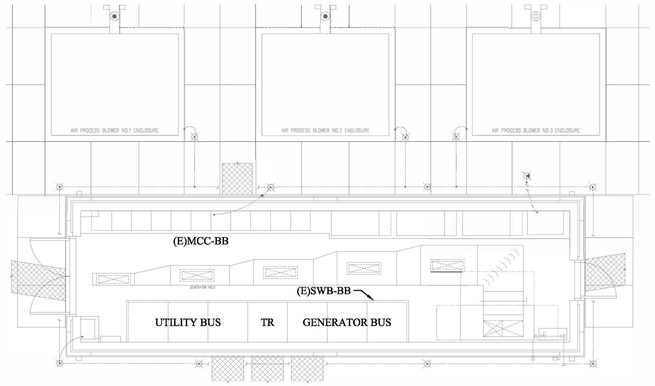

NORTH

BNR BLOWER BUILDING #6 - PARTIAL PLAN

SCALE: 1/4"=1'-0"

0 1' 5' 10'

XX CONSTRUCTION NOTES:

1. MODIFY TRIP SETTING TO 1,500 AMPS.
2. PROVIDE 600 AF / 400 AT SOLID STATE EATON FEEDER BREAKER AND ACCESSORIES AS REQUIRED TO INSTALL FEEDER BREAKER. BREAKER SHALL BE INSTALLED ON THE UTILITY POWER SIDE OF THE BUS.
3. 2 SETS OF (2) 4" DUCTS. 4# 400K, AND # 1/0 EGC.
4. PROVIDE 3 #1, 1 #6 EGC, 1 1/2" RSC.

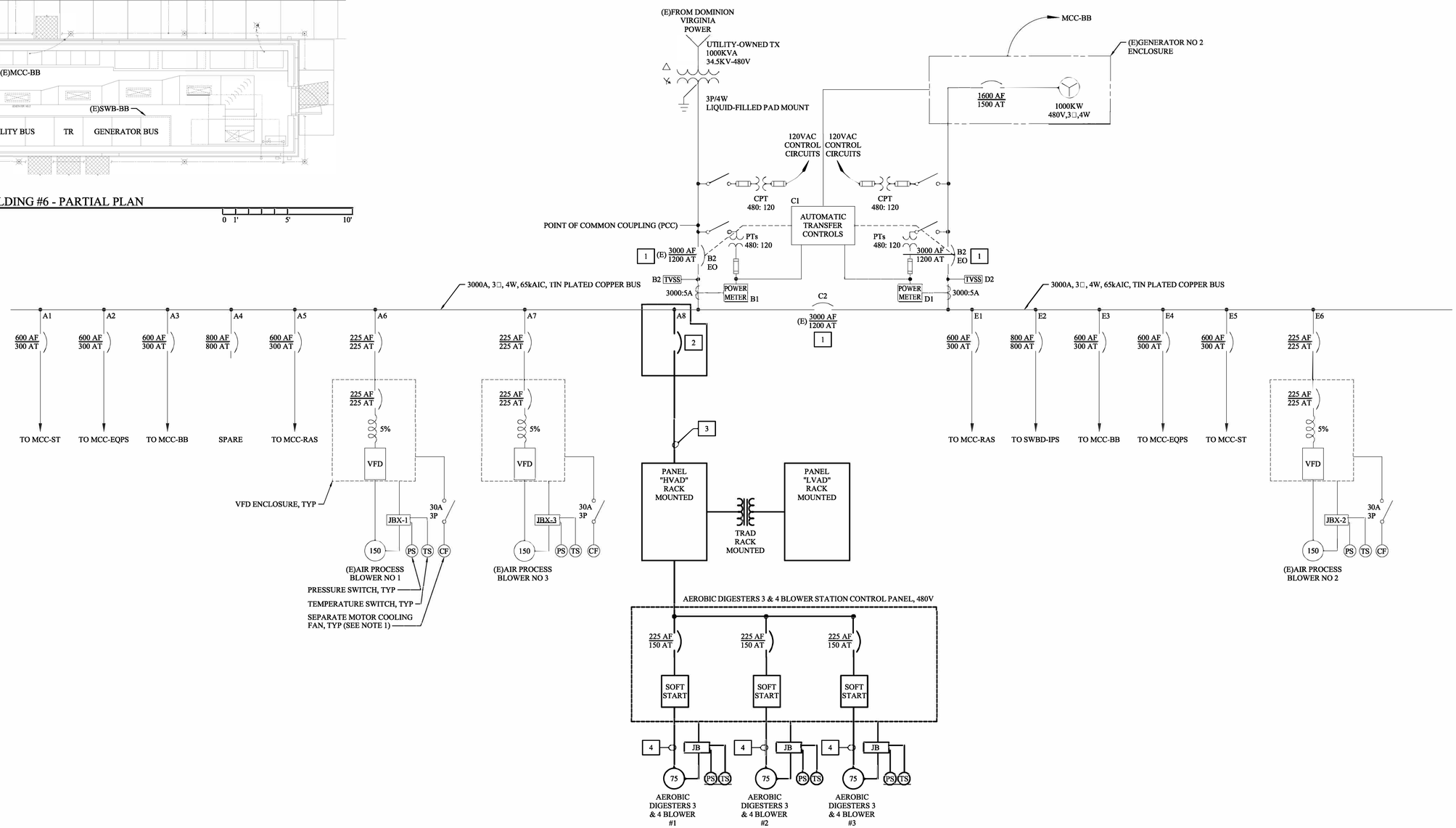

EXISTING BNR BLOWER BUILDING #6 SWBD SINGLE LINE DIAGRAM (FROM AS-BUILTS)

SCALE: NONE

(EXISTING SWBD IS REVERSED FROM AS-BUILT DRAWINGS)

NO.	SHEET REVISION	BY	DATE	NO.	SHEET REVISION	BY	DATE

COMMONWEALTH OF VIRGINIA
JASON A. CLARK
Lic. No. 33605
4/29/2022
PROFESSIONAL ENGINEER

WW ENGINEERS SURVEYORS PLANNERS ASSOCIATES
PO Box 4119 Lynchburg, VA 24502 Phone: 434.316.6080
968 Cityspring Drive, Suite 1 Charlottesville, VA 22911 Phone: 434.994.2700
www.wwassociates.net

DESIGNED BY: WKH	PROJECT: WASTEWATER TREATMENT PLANT IMPROVEMENTS TOWN OF CULPEPER, VIRGINIA		SET REV. NO. –
DRAWN BY: STAFF	TITLE: AEROBIC DIGESTERS 3 & 4 BLOWERS STATION POWER DISTRIBUTION DETAILS		DRAWING NUMBER: E–2.2
DIHR BY: HFW			
WWA NUMBER: 221028.00	FILE NAME:	DISCIPLINE: ELECTRICAL	SCALE: H: N/A V: N/A
			DATE: 4/29/22

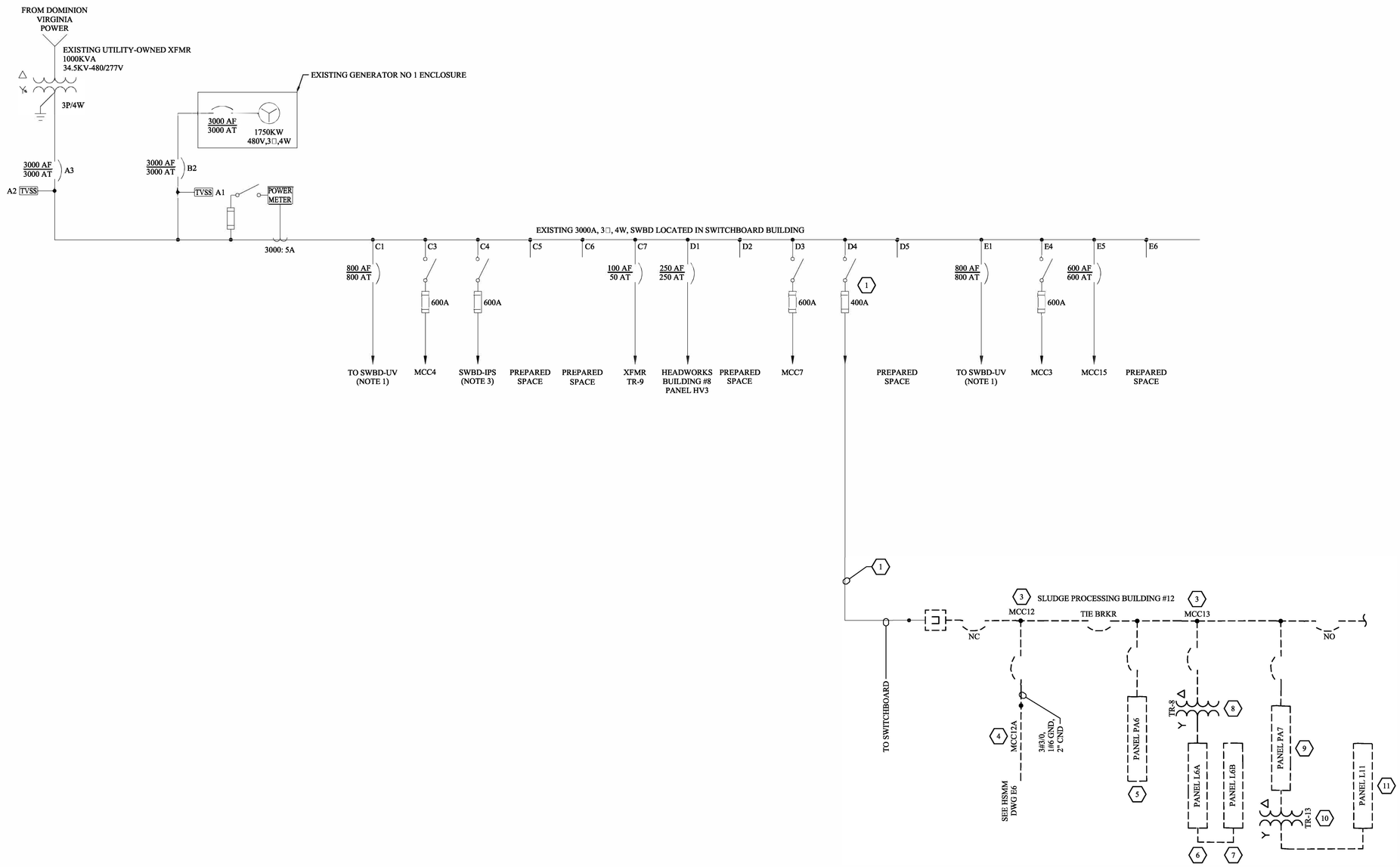

DEMOLITION NOTES:

1. EXISTING FEED FROM SWBD TO BUILDING #12. TAG OUT FEEDER SWITCH "NOT-IN-SERVICE".
2. DEMO BUILDING FEED AT EXISTING JUNCTION BOX PER DRAWING E-12.
3. DEMO MCC 12 AND MCC 13. EXISTING CIRCUITS TO REMAIN AND RE FED FROM MCC 11, BUILDING #11 SHALL BE PROTECTED AND DISCONNECT SWITCHES / STARTERS SHALL BE PROVIDED TO TERMINATE EXISTING CONDUCTORS TO NEW BRANCH CIRCUITS PER DRAWING E-13.
4. DEMO MCC 12A AND ASSOCIATED FEEDER AND BRANCH CIRCUITS TO LOADS COMPLETELY.
5. COMPLETELY REMOVE PANEL "PA6" AND REPLACE WITH NEW PANEL. RETERMINATE LOADS TO REMAIN.
6. COMPLETELY REMOVE PANEL "L6A" AND REPLACE WITH NEW PANEL. RETERMINATE LOADS TO REMAIN.
7. COMPLETELY REMOVE PANEL "L6B" AND REPLACE WITH NEW PANEL. RETERMINATE LOADS TO REMAIN.
8. DEMO TRANSFORMER "TR-8" AND REPLACE WITH NEW XFMR "TR6A" PER DRAWING E-3.
9. COMPLETELY REMOVE PANEL "PA7" AND REPLACE WITH NEW PANEL. RETERMINATE LOADS TO REMAIN.
10. DEMO TRANSFORMERS "TR-13" AND "TRL11" AND REPLACE WITH NEW XFMR "TR6A" PER DRAWING E-3.
11. COMPLETELY REMOVE PANEL "L11" AND REPLACE WITH NEW PANEL. RETERMINATE LOADS TO REMAIN.

EXISTING SWITCHBOARD AND SLUDGE PROCESSING BUILDING #12 DEMO POWER DISTRIBUTION DIAGRAM

SCALE: NONE

NO.	SHEET REVISION	BY	DATE	NO.	SHEET REVISION	BY	DATE

COMMONWEALTH OF VIRGINIA
JASON A. CLARK
Lic. No. 33605
4/29/2022
PROFESSIONAL ENGINEER

WWA ASSOCIATES
ENGINEERS SURVEYORS PLANNERS
PO Box 4119, Lynchburg, VA 24502, Phone: 434.316.6080
968 Olympia Drive, Suite 1, Charlottesville, VA 22901, Phone: 434.994.3700
www.wwassociates.net

DESIGNED BY: WKH	PROJECT: WASTEWATER TREATMENT PLANT IMPROVEMENTS TOWN OF CULPEPER, VIRGINIA		SET REV. NO. –
DRAWN BY: STAFF	TITLE: EXISTING SWBD AND SLUDGE PROCESSING BUILDING #12 POWER DISTRIBUTION DETAILS		DRAWING NUMBER: E-2.3
DIHR BY: HFW			
WWA NUMBER: 221028.00	FILE NAME:	DISCIPLINE: ELECTRICAL	SCALE: H: N/A V: N/A	DATE: 4/29/22

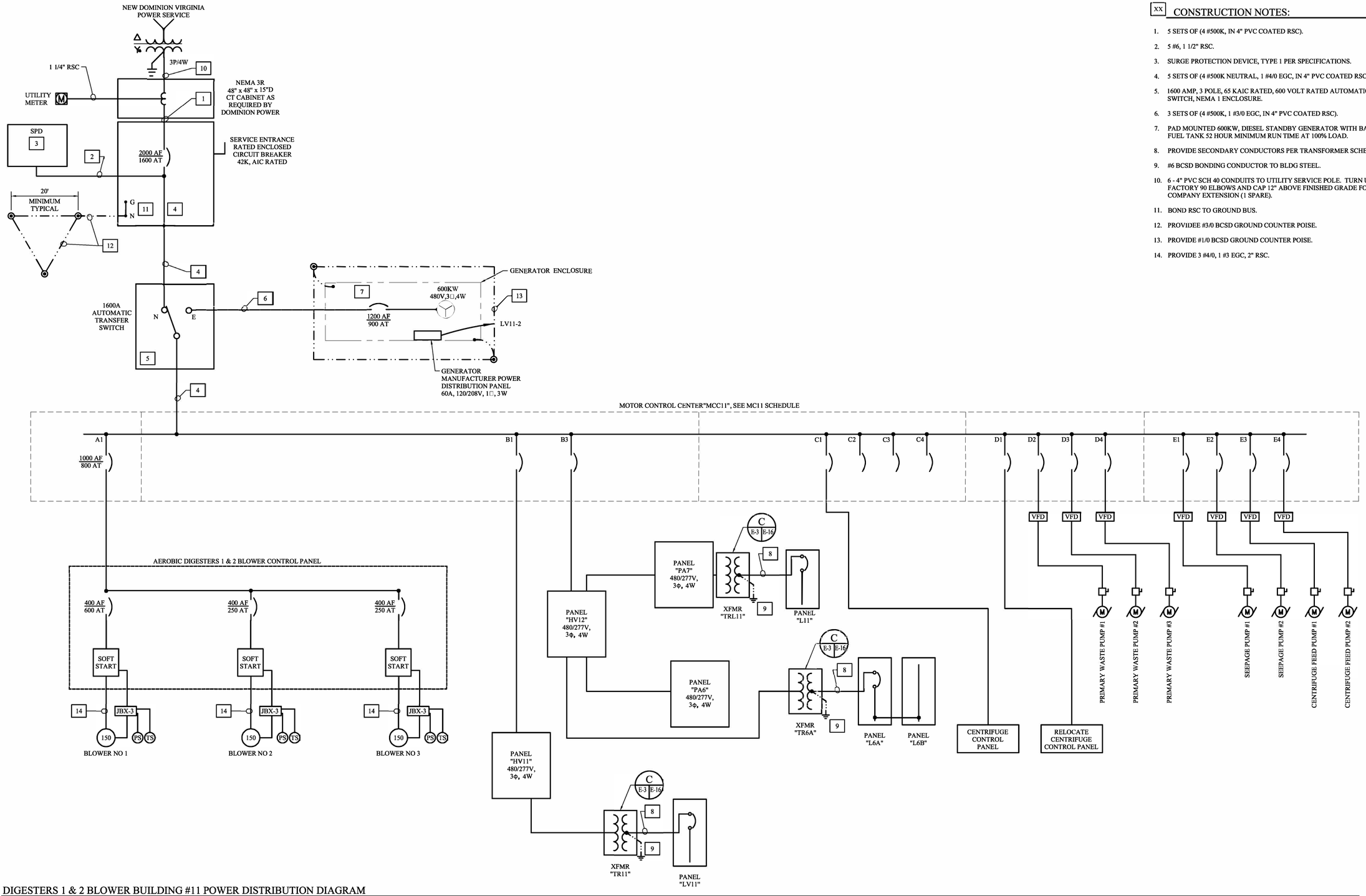

XX CONSTRUCTION NOTES:

1. 5 SETS OF (4 #500K, IN 4" PVC COATED RSC).
2. 5 #6, 1 1/2" RSC.
3. SURGE PROTECTION DEVICE, TYPE 1 PER SPECIFICATIONS.
4. 5 SETS OF (4 #500K NEUTRAL, 1 #4/0 EGC, IN 4" PVC COATED RSC).
5. 1600 AMP, 3 POLE, 65 KAIC RATED, 600 VOLT RATED AUTOMATIC TRANSFER SWITCH, NEMA 1 ENCLOSURE.
6. 3 SETS OF (4 #500K, 1 #3/0 EGC, IN 4" PVC COATED RSC).
7. PAD MOUNTED 600KW, DIESEL STANDBY GENERATOR WITH BASE MOUNTED FUEL TANK 52 HOUR MINIMUM RUN TIME AT 100% LOAD.
8. PROVIDE SECONDARY CONDUCTORS PER TRANSFORMER SCHEDULE.
9. #6 BCSD BONDING CONDUCTOR TO BLDG STEEL.
10. 6 - 4" PVC SCH 40 CONDUITS TO UTILITY SERVICE POLE. TURN UP AT POLE WITH FACTORY 90 ELBOWS AND CAP 12" ABOVE FINISHED GRADE FOR UTILITY COMPANY EXTENSION (1 SPARE).
11. BOND RSC TO GROUND BUS.
12. PROVIDEE #3/0 BCSD GROUND COUNTER POISE.
13. PROVIDE #1/0 BCSD GROUND COUNTER POISE.
14. PROVIDE 3 #4/0, 1 #3 EGC, 2" RSC.

DIGESTERS 1 & 2 BLOWER BUILDING #11 POWER DISTRIBUTION DIAGRAM

SCALE: NONE

NO.	SHEET REVISION	BY	DATE	NO.	SHEET REVISION	BY	DATE

COMMONWEALTH OF VIRGINIA
JASON A. CLARK
Lic. No. 33605
4/29/2022
PROFESSIONAL ENGINEER

WWA ENGINEERS SURVEYORS PLANNERS ASSOCIATES
PO Box 4119, Lynchburg, VA 24502, Phone: 434.316.6080
968 Cityspin Drive, Suite 1, Charlottesville, VA 22911, Phone: 434.994.2700
www.wwassociates.net

DESIGNED BY: WKH	PROJECT: WASTEWATER TREATMENT PLANT IMPROVEMENTS TOWN OF CULPEPER, VIRGINIA		SET REV. NO. —
DRAWN BY: STAFF	TITLE: DIGESTERS 1 & 2 BLOWER BUILDING #11 AND SLUDGE PROCESSING BLDG #12 POWER DISTRIBUTION DIAGRAM		DRAWING NUMBER: E-3
DIHR BY: HFW			
WWA NUMBER: 221028.00	FILE NAME:	DISCIPLINE: ELECTRICAL	SCALE: H: N/A V: N/A	DATE: 4/29/22

DEMOLITION NOTES:

1. DEMO HEADWORKS BUILDING PER DRAWING C-8, ASSOCIATED ELECTRICAL CIRCUITS COMPLETE BACK TO POWER SUPPLY.
2. DEMO SECONDARY CLARIFIER/RAS PUMP STATION No.1 ELECTRICAL COMPLETE PER DRAWING C-14.
3. DEMO DIGESTER CONTROL BUILDING PER DRAWING C-17, ASSOCIATED ELECTRICAL CIRCUITS COMPLETE BACK TO POWER SUPPLY.
4. DEMO SECONDARY CLARIFIERS PER DRAWING C-13, ASSOCIATED ELECTRICAL CIRCUITS COMPLETE BACK TO PUMP STATION.
5. DEMO ANAEROBIC DIGESTERS PER DRAWING C-15 & C-16, ELECTRICAL BRANCH CIRCUITS COMPLETE BACK TO POWER SUPPLY.
6. DEMO DRAIN PUMP STATION PER DRAWING C-10, ASSOCIATED ELECTRICAL CIRCUITS COMPLETE BACK TO POWER SUPPLY.

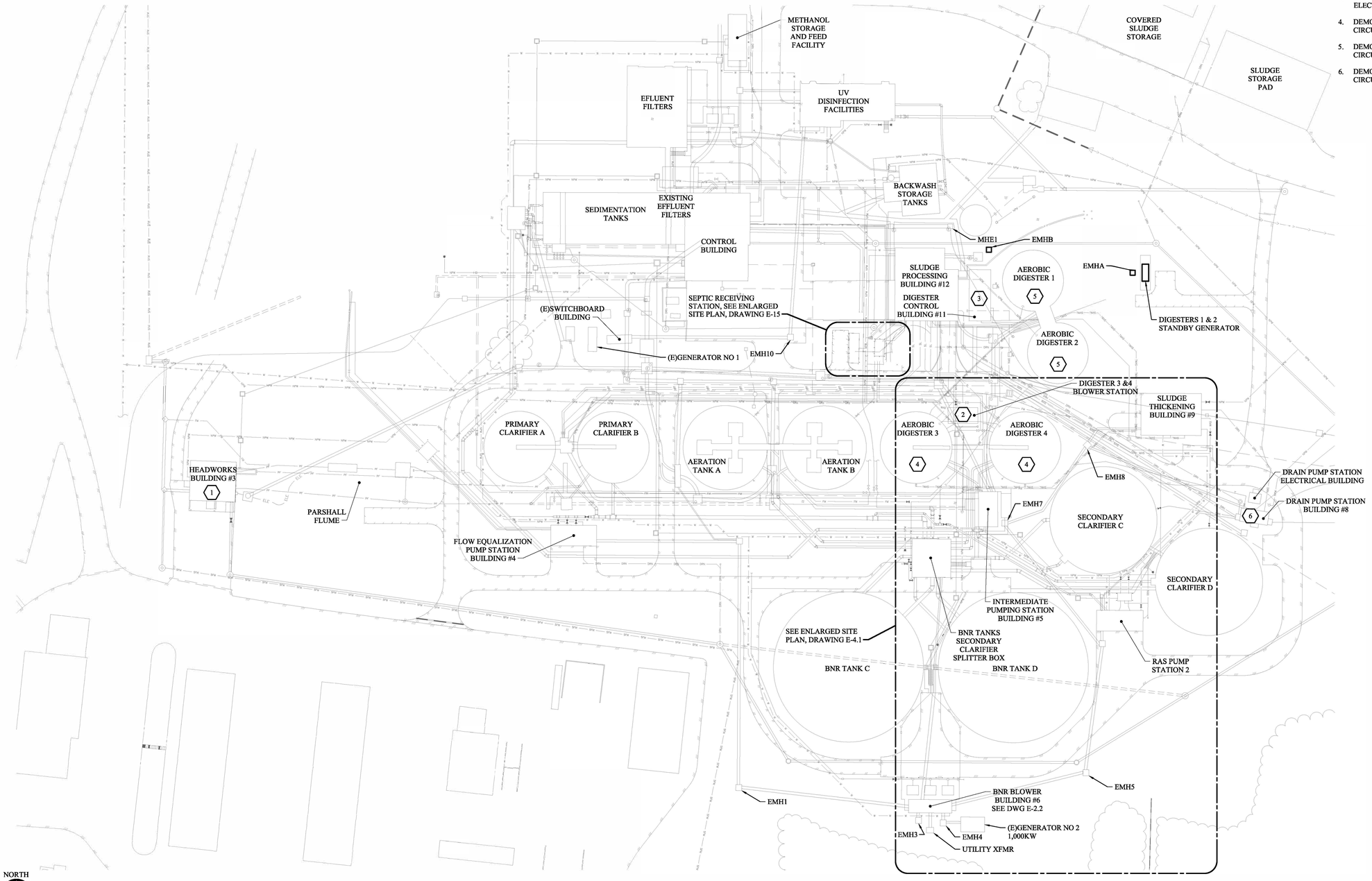

OVERALL SITE PLAN

SCALE: 1"=50'-0"

NO.	SHEET REVISION	BY	DATE	NO.	SHEET REVISION	BY	DATE

COMMONWEALTH OF VIRGINIA
JASON A. CLARK
Lic. No. 33605
4/29/2022
PROFESSIONAL ENGINEER

WW ASSOCIATES
ENGINEERS SURVEYORS PLANNERS
PO Box 4119 Lynchburg, VA 24502 Phone: 434.316.6080
968 Olympia Drive, Suite 1 Charlottesville, VA 22911 Phone: 434.984.2700
www.wwassociates.net

DESIGNED BY: WKH	PROJECT: WASTEWATER TREATMENT PLANT IMPROVEMENTS TOWN OF CULPEPER, VIRGINIA		SET REV. NO. –
DRAWN BY: STAFF	TITLE: OVERALL SITE PLAN		DRAWING NUMBER: E-4
DIHR BY: HFW			
WWA NUMBER: 221028.00	FILE NAME:	DISCIPLINE: ELECTRICAL	SCALE: H: N/A V: N/A	DATE: 4/29/22

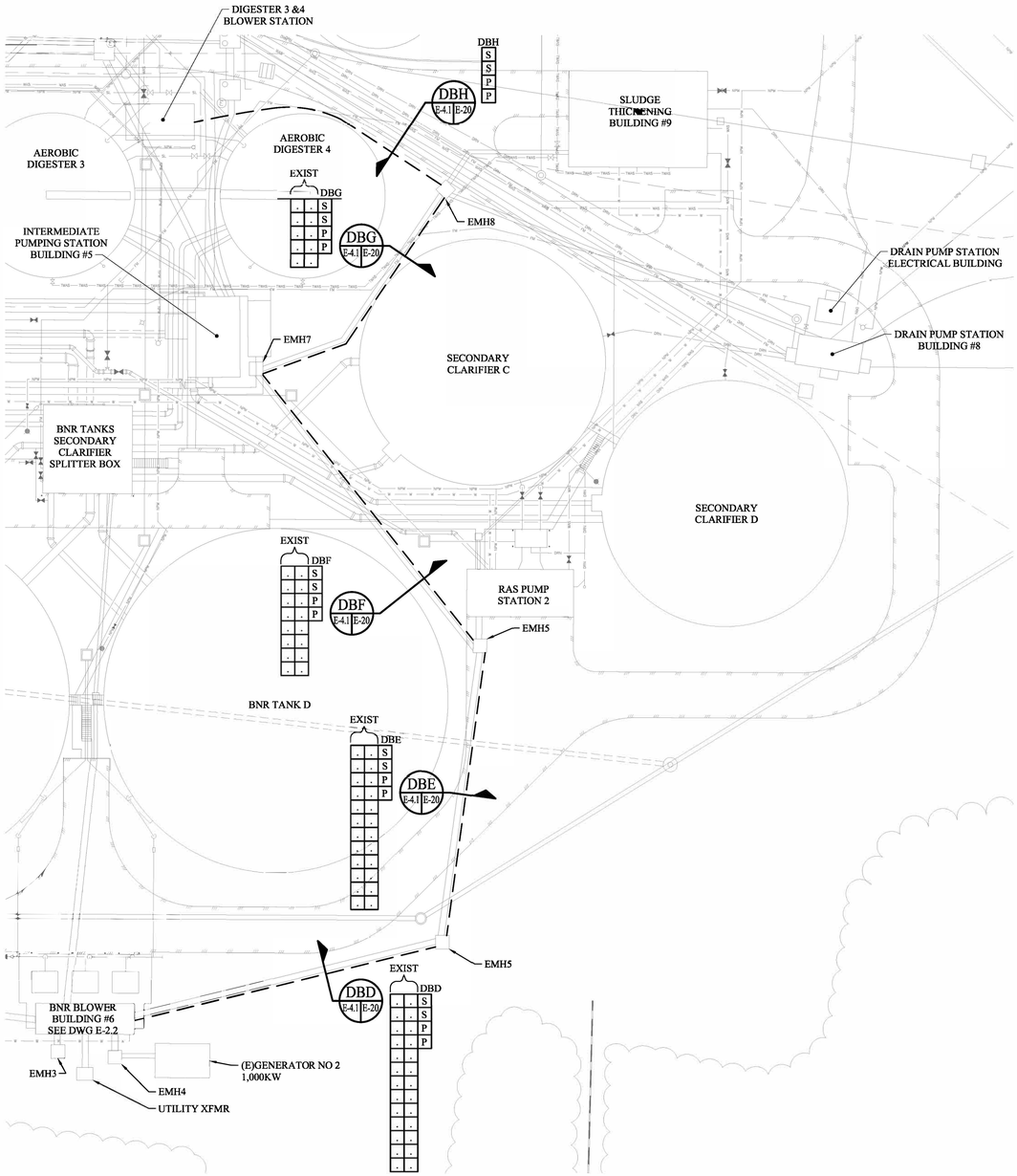

NORTH

ENLARGED SITE PLAN

SCALE: 1"=30'-0"

0 15' 30' 60'

NO.	SHEET REVISION	BY	DATE	NO.	SHEET REVISION	BY	DATE

COMMONWEALTH OF VIRGINIA
JASON A. CLARK
Lic. No. 33605
4/29/2022
PROFESSIONAL ENGINEER

WW ASSOCIATES
ENGINEERS SURVEYORS PLANNERS
PO Box 4119, Lynchburg, VA 24502, Phone: 434.316.6080
968 Olympia Drive, Suite 1, Charlottesville, VA 22911, Phone: 434.984.2700
www.wwassociates.net

DESIGNED BY: WKH	PROJECT: WASTEWATER TREATMENT PLANT IMPROVEMENTS TOWN OF CULPEPER, VIRGINIA		SET REV. NO. –
DRAWN BY: STAFF	TITLE: ENLARGED SITE PLAN		DRAWING NUMBER: E-4.1
DIHR BY: HFW			
WWA NUMBER: 221028.00	FILE NAME:	DISCIPLINE: ELECTRICAL	SCALE: H: N/A V: N/A
			DATE: 4/29/22

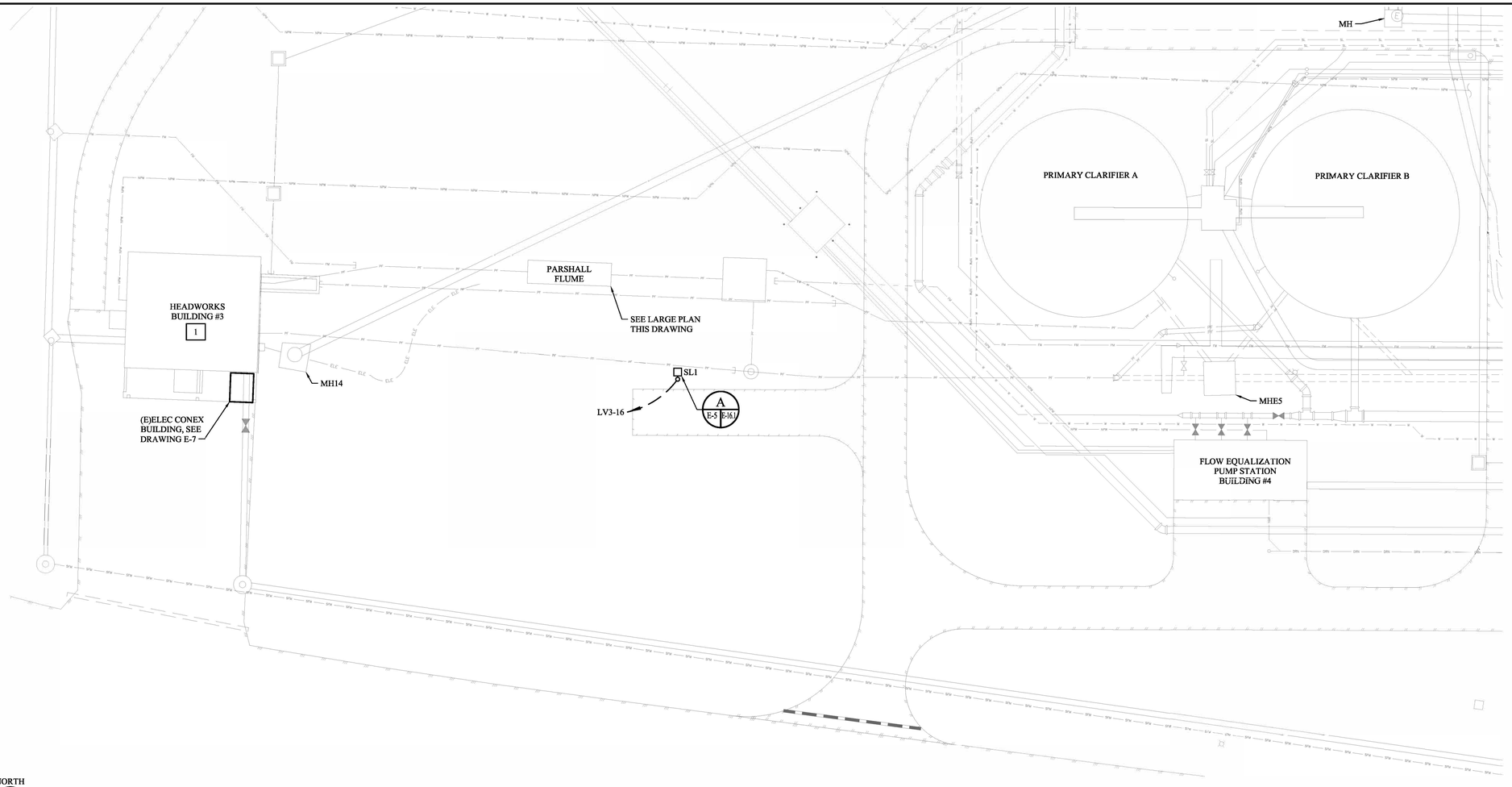

NORTH

PARTIAL WEST SITE PLAN

SCALE: 1"=20'-0"

0 10' 20' 40'

XX CONSTRUCTION NOTES:

1. SEE DRAWING E-7 FOR ELECTRICAL WORK.
2. PROVIDE (2) 3/4" PVC COATED RSC FROM INSTRUMENT TO PULL BOX. ONE FOR POWER AND ONE FOR DATA.

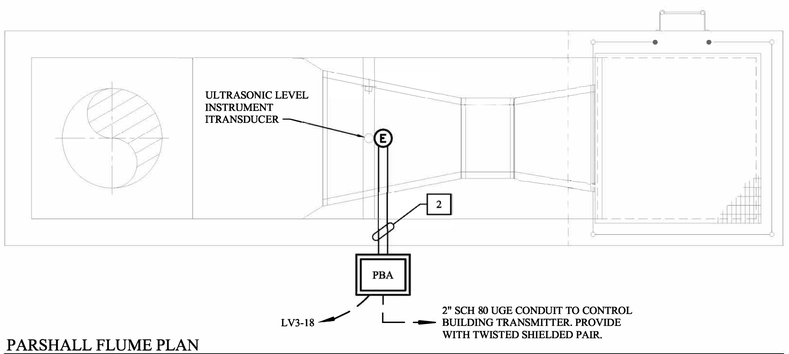

PARSHALL FLUME PLAN

SCALE: 3/8"=1'-0"

0 6" 1' 2' 3' 4' 5'

NO.	SHEET REVISION	BY	DATE	NO.	SHEET REVISION	BY	DATE

COMMONWEALTH OF VIRGINIA
JASON A. CLARK
Lic. No. 33605
4/29/2022
PROFESSIONAL ENGINEER

WW ASSOCIATES
ENGINEERS SURVEYORS PLANNERS
PO Box 4119, Lynchburg, VA 24502, Phone: 434.316.6080
968 Olympia Drive, Suite 1, Charlottesville, VA 22911, Phone: 434.984.2700
www.wwassociates.net

DESIGNED BY: WKH	PROJECT: WASTEWATER TREATMENT PLANT IMPROVEMENTS TOWN OF CULPEPER, VIRGINIA		SET REV. NO. –
DRAWN BY: STAFF	TITLE: PARTIAL WEST SIDE SITE PLAN		DRAWING NUMBER: E-5
DIHR BY: HFW			
WWA NUMBER: 221028.00	FILE NAME:	DISCIPLINE: ELECTRICAL	SCALE: H: N/A V: N/A	DATE: 4/29/22

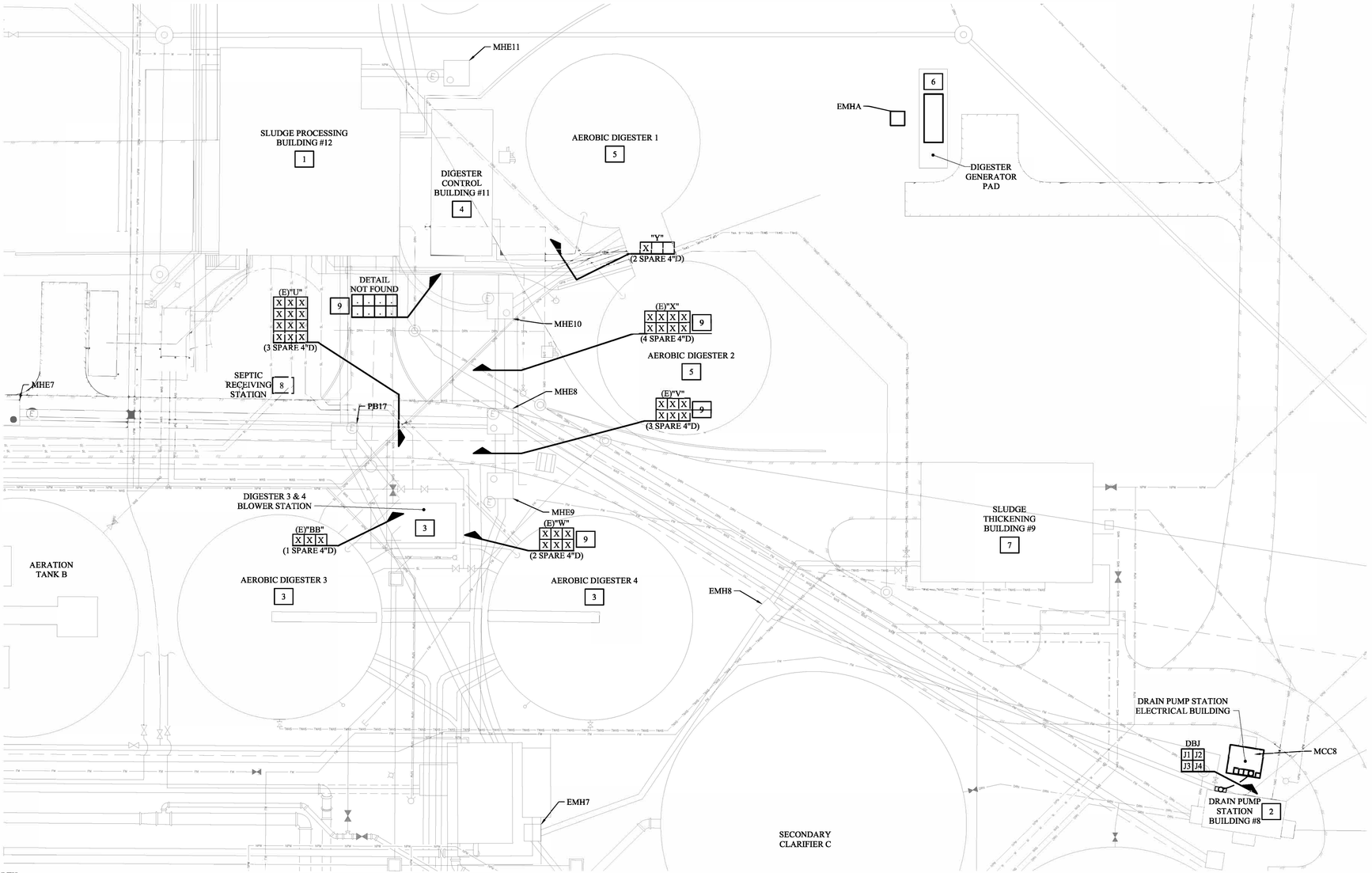

NORTH

PARTIAL EAST SITE PLAN

SCALE: 1"=20'-0"

0 10' 20' 40'

XX CONSTRUCTION NOTES:

1. SEE DRAWINGS E-12, E-13.
2. SEE DRAWING E-8.
3. SEE DRAWING E-9.
4. SEE DRAWING E-6.1 AND E-11.
5. SEE DRAWING E-10.
6. SEE DRAWING E-6.1.
7. SEE DRAWING E-14.
8. SEE DRAWING E-16.
9. UTILITIES (1) OF EXISTING SPARE 4" DUCTS FOR DATA CABLES FROM AEROBIC DIGESTERS 3 AND 4 TO SLUDGE PROCESSING BUILDING #11. THEN PROVIDE 2" CONDUIT FROM DUCT BANK ENTRANCE THROUGH BUILDING #11 TO BUILDING #12 SCADA PANEL.

NO.	SHEET REVISION	BY	DATE	NO.	SHEET REVISION	BY	DATE

COMMONWEALTH OF VIRGINIA
JASON A. CLARK
Lic. No. 33605
4/29/2022
PROFESSIONAL ENGINEER

WWA ENGINEERS SURVEYORS PLANNERS ASSOCIATES
PO Box 4119 Lynchburg, VA 24502 Phone: 434.316.6080
968 Olympia Drive, Suite 1 Charlottesville, VA 22911 Phone: 434.984.2700
www.wwassociates.net

DESIGNED BY: WKH	PROJECT: WASTEWATER TREATMENT PLANT IMPROVEMENTS TOWN OF CULPEPER, VIRGINIA		SET REV. NO. –
DRAWN BY: STAFF	TITLE: PARTIAL EAST SIDE SITE PLAN		DRAWING NUMBER: E–6
DIHR BY: HFW			
WWA NUMBER: 221028.00	FILE NAME:	DISCIPLINE: ELECTRICAL	SCALE: H: N/A V: N/A	DATE: 4/29/22

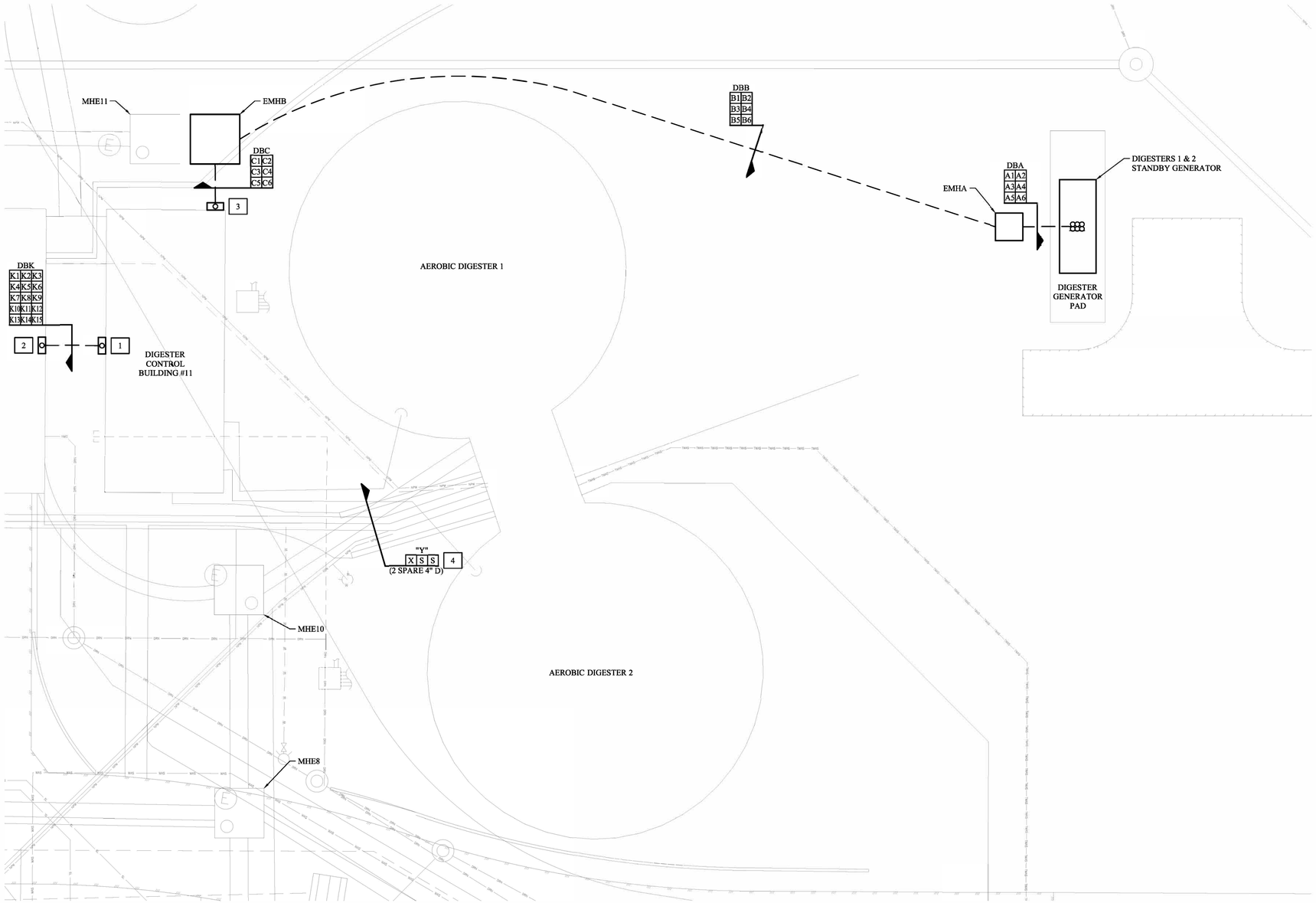

NORTH

DIGESTERS 1 & 2 STANDBY GENERATOR - PARTIAL SITE PLAN

SCALE: 1"=10'-0"

0 5' 10' 20'

XX CONSTRUCTION NOTES:

1. PROVIDE HOFFMAN OR EQUAL 36"W x 16"D x 48"H, NEMA 4X PULL BOX WITH HINGED COVER (NO SPLICES THIS BOX).
2. PROVIDE HOFFMAN OR EQUAL 36"W X 16"D X 48"H, NEMA 4X PULL BOX WITH HINGED COVER (NO SPLICES THIS BOX).
3. PROVIDE HOFFMAN OR EQUAL 36"W X 16"D X 48"H, NEMA 4X PULL BOX WITH HINGED COVER (NO SPLICES THIS BOX).
4. UTILIZE (1) SPARE 4" DUCT IN DUCT BANK "Y" TO RUN DATA CABLES FROM AEROBIC DIGESTERS 1 AND 2 TO DIGESTER CONTROL BUILDING #1 VIA BUILDING #12. PROVIDE 2" RSC FROM DUCT ENTRANCE IN BUILDING #12 THROUGH BUILDING #12 TO BUILDING #11 SCADA PANEL.

NO.	SHEET REVISION	BY	DATE	NO.	SHEET REVISION	BY	DATE

COMMONWEALTH OF VIRGINIA
JASON A. CLARK
Lic. No. 33605
4/29/2022
PROFESSIONAL ENGINEER

WWA ENGINEERS SURVEYORS PLANNERS ASSOCIATES
PO Box 4119, Lynchburg, VA 24502, Phone: 434.316.6080
968 Olympia Drive, Suite 1, Charlottesville, VA 22911, Phone: 434.984.2700
www.wwassociates.net

DESIGNED BY: WKH	PROJECT: WASTEWATER TREATMENT PLANT IMPROVEMENTS TOWN OF CULPEPER, VIRGINIA		SET REV. NO. –
DRAWN BY: STAFF	TITLE: DIGESTERS 1 & 2 STANDBY GENERATOR SITE PLAN		DRAWING NUMBER: E-6.1
DIHR BY: HFW			
WWA NUMBER: 221028.00	FILE NAME:	DISCIPLINE: ELECTRICAL / SCALE: H: N/A V: N/A	DATE: 4/29/22

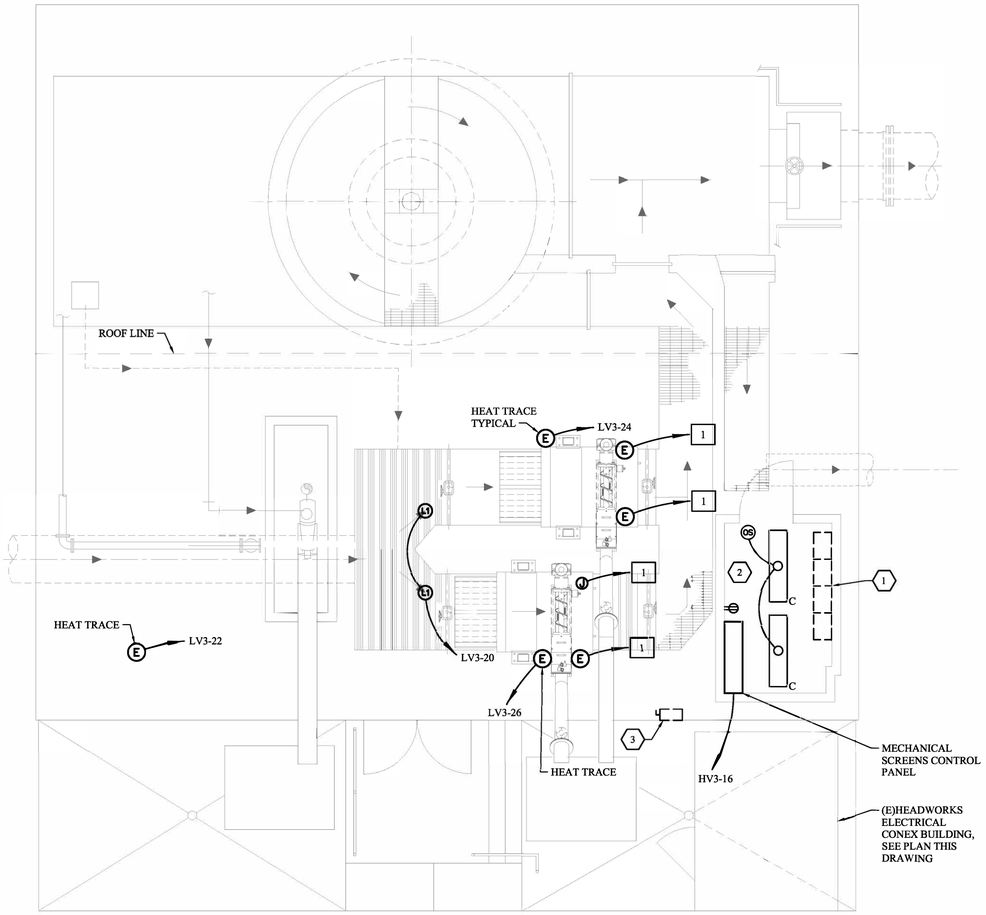

HEADWORKS BUILDING #3 FLOOR PLAN - POWER AND LIGHTING
SCALE: 1/4"=1'-0"
0 1' 5' 10'

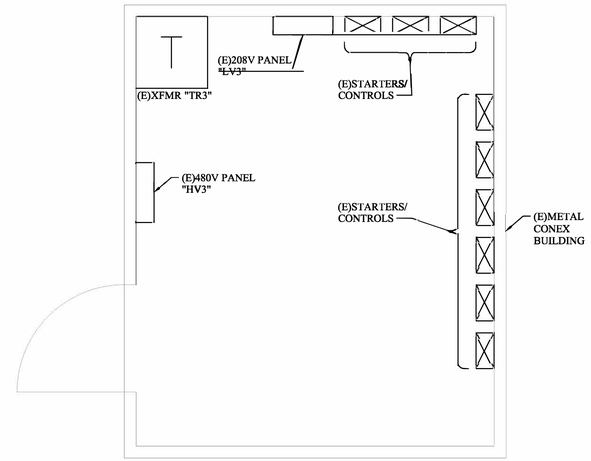

EXISTING HEADWORKS ELECTRICAL CONEX BUILDING
SCALE: 1/2"=1'-0"
0 6" 1' 2' 5'

DEMOLITION NOTES:

1. DEMO MCC14.
2. DEMO LIGHTING AND CONTROLS.
3. 200A, 600V MANUAL TRANSFER SWITCH TO REMAIN.

CONSTRUCTION NOTES:

1. PROVIDE 1" PVC COATED RSC WITH 3 #12, 1 #12 EGC FROM LOAD TO MECHANICAL SCREED CONTROL PANEL.

NO.	SHEET REVISION	BY	DATE	NO.	SHEET REVISION	BY	DATE

COMMONWEALTH OF VIRGINIA
JASON A. CLARK
Lic. No. 33605
4/29/2022
PROFESSIONAL ENGINEER

WW ASSOCIATES
ENGINEERS SURVEYORS PLANNERS
PO Box 4119 Lynchburg, VA 24502 Phone: 434.316.6080
968 Olympia Drive, Suite 1 Charlottesville, VA 22911 Phone: 434.984.2700
www.wwassociates.net

DESIGNED BY: WKH
DRAWN BY: STAFF
DIHR BY: HFW
WWA NUMBER: 221028.00

PROJECT: WASTEWATER TREATMENT PLANT IMPROVEMENTS TOWN OF CULPEPER, VIRGINIA
TITLE: HEADWORKS BUILDING ELECTRICAL PLAN
FILE NAME:
DISCIPLINE: ELECTRICAL
SCALE: H: N/A V: N/A
SET REV. NO. –
DRAWING NUMBER: E-7
DATE: 4/29/22

DEMOLITION NOTES:

1. DEMO MCC15.
2. DEMO PANEL "L10".
3. DEMO XFMR.
4. DEMO INTERIOR LIGHTING, (2) ROWS OF (3) 4' FIXTURES.
5. DEMO SCADA CABINET.
6. EXISTING BUILDING MOUNTED POWER FEED TO MCC15 JUNCTION BOX.
7. EXISTING JUNCTION BOX.

CONSTRUCTION NOTES:

1. 24"W x 16"D x 36"H MINIMUM HOFFAN ENCLOSURE WITH HINGED DOOR, NEMA 12 RATED. INSTALL 24" ABOVE FINISHED FLOOR.
2. HOFFMAN OR EQUAL 36"W x 20"D x 48"H MINIMUM WALL MOUNTED 4X STAINLESS STEEL ENCLOSURE WITH CONTINUOUS HINGED DOOR.
3. PROVIDE 3/4 " CONDUIT FOR INSTRUMENT CABLE TO THE SCADA CONTROL CABINET IN THE ELECTRICAL BUILDING.

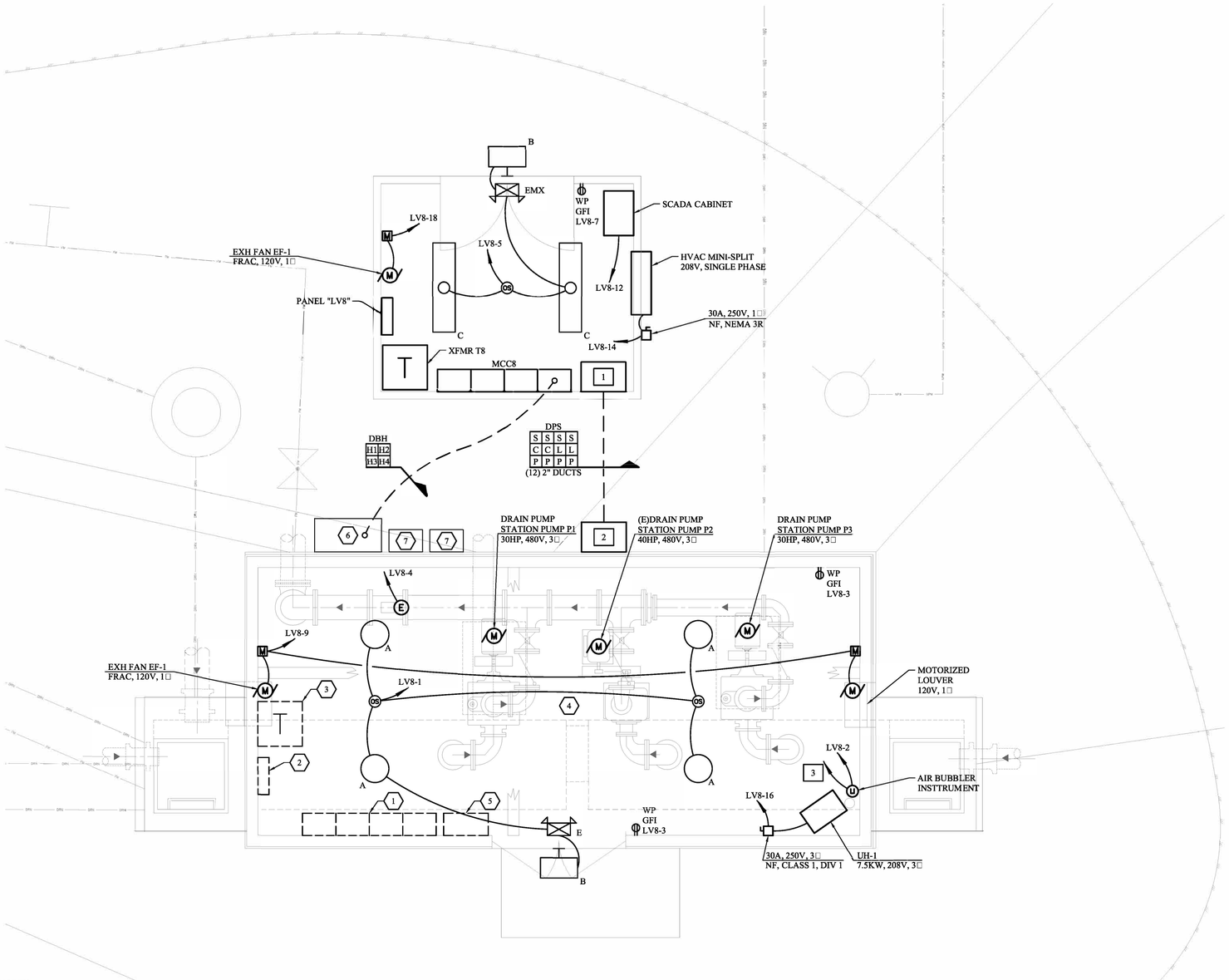

NORTH

PARTIAL SITE DRAIN PUMP STATION BUILDING #8 FLOOR PLAN - LIGHTING AND POWER

SCALE: 3/8"=1'-0"

0 6" 1' 2' 3' 4' 5'

DRAIN PUMP STATION JUNCTION BOX PHOTO

SCALE: NONE

NO.	SHEET REVISION	BY	DATE	NO.	SHEET REVISION	BY	DATE

COMMONWEALTH OF VIRGINIA
JASON A. CLARK
Lic. No. 33605
4/29/2022
PROFESSIONAL ENGINEER

WW ASSOCIATES
ENGINEERS SURVEYORS PLANNERS
PO Box 4119, Lynchburg, VA 24502, Phone: 434.316.6080
968 Olympia Drive, Suite 1, Charlottesville, VA 22911, Phone: 434.994.2700
www.wwassociates.net

DESIGNED BY: WKH	PROJECT: WASTEWATER TREATMENT PLANT IMPROVEMENTS TOWN OF CULPEPER, VIRGINIA		SET REV. NO. –
DRAWN BY: STAFF	TITLE: DRAIN PUMP STATION BUILDING #8 ELECTRICAL PLANS		DRAWING NUMBER: E-8
DIHR BY: HFW			
WWA NUMBER: 221028.00	FILE NAME:	DISCIPLINE: ELECTRICAL	SCALE: H: N/A V: N/A	DATE: 4/29/22

XX CONSTRUCTION NOTES:

1. PROVIDE ELECTRICAL RACK PER DETAIL.
2. PROVIDE 2" PVC SCH 80 FROM VALVE TO SCADA PANEL IN BUILDING #11, VIA EXISTING DUCT BANKS PER DRAWING E-6.
3. UNDERGROUND FEEDS TO BLOWERS PER DRAWING E-2.2.

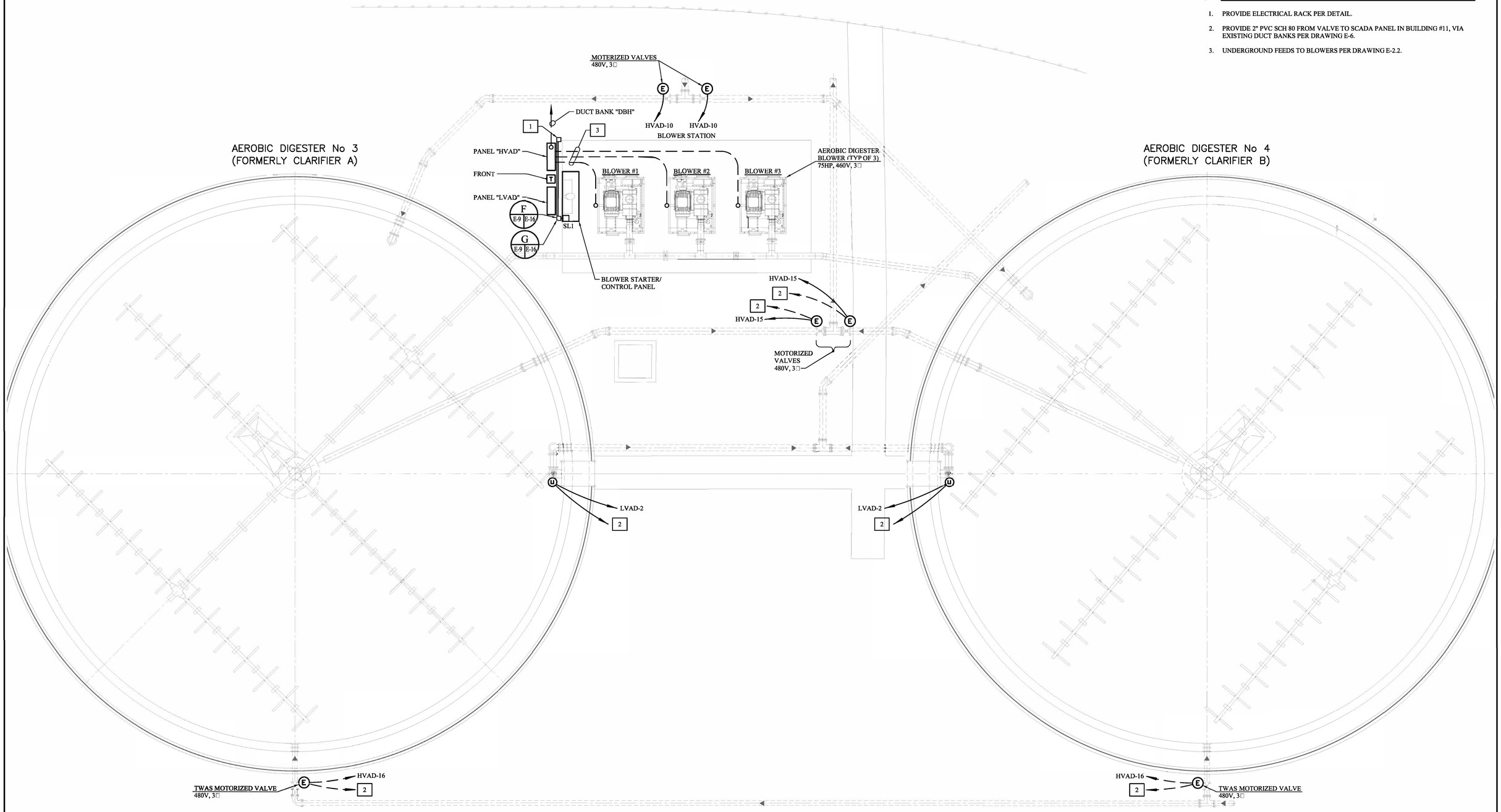

NORTH

AEROBIC DIGESTERS 3 & 4 PLAN - ELECTRICAL

SCALE: 3/16"=1'-0"

0 5' 10'

NO.	SHEET REVISION	BY	DATE	NO.	SHEET REVISION	BY	DATE

COMMONWEALTH OF VIRGINIA
JASON A. CLARK
Lic. No. 33605
4/29/2022
PROFESSIONAL ENGINEER

WW ASSOCIATES
ENGINEERS SURVEYORS PLANNERS
PO Box 4119, Lynchburg, VA 24502, Phone: 434.316.6080
968 Olympia Drive, Suite 1, Charlottesville, VA 22911, Phone: 434.984.2700
www.wwassociates.net

DESIGNED BY: WKH	PROJECT: WASTEWATER TREATMENT PLANT IMPROVEMENTS TOWN OF CULPEPER, VIRGINIA		SET REV. NO. –
DRAWN BY: STAFF	TITLE: SECONDARY CLARIFIERS A & B CONVERTED TO AEROBIC DIGESTERS 3 & 4 ELECTRICAL PLAN		DRAWING NUMBER: E-9
DIHR BY: HFW			
WWA NUMBER: 221028.00	FILE NAME:	DISCIPLINE: ELECTRICAL / SCALE: H: N/A V: N/A	DATE: 4/29/22

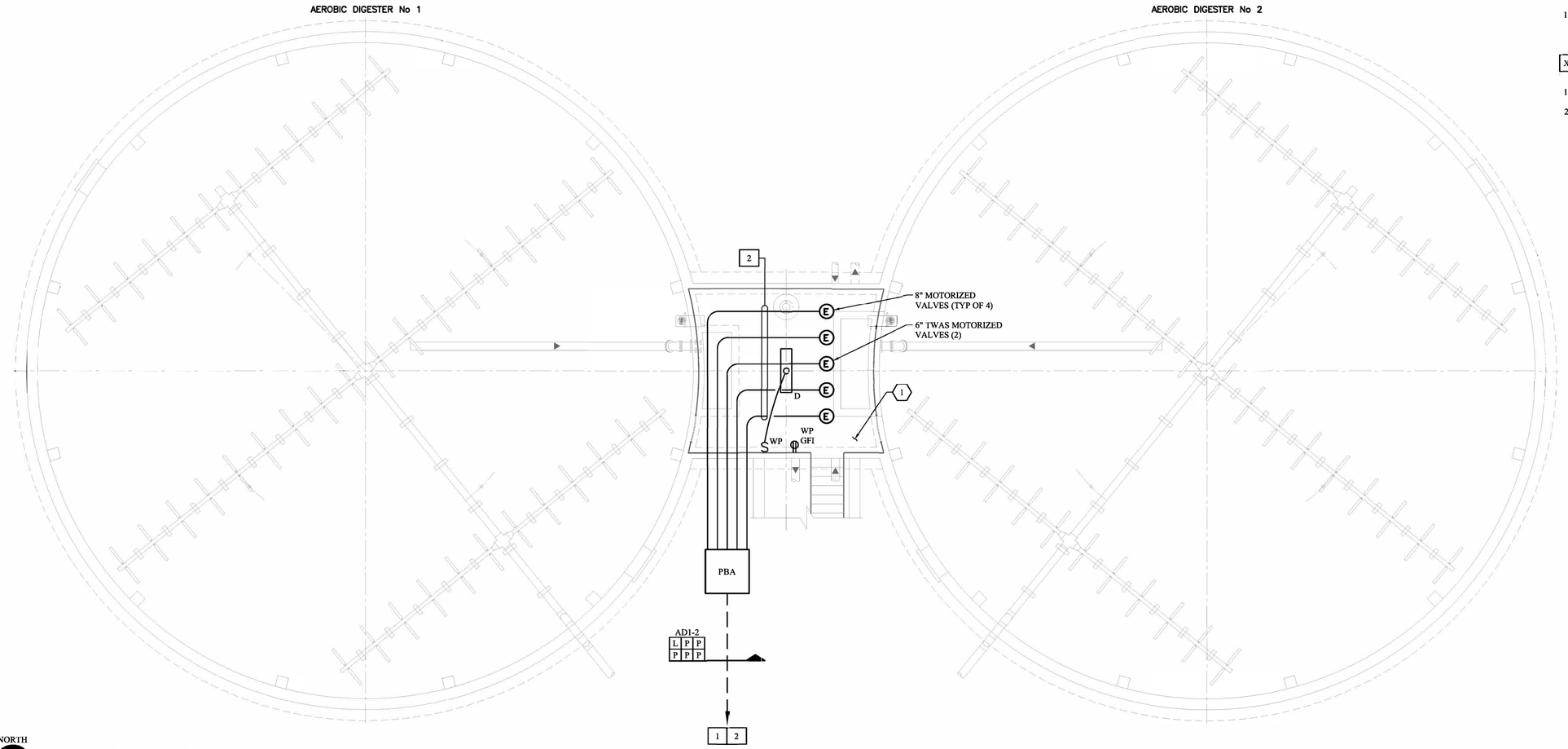

AEROBIC DIGESTERS 1 & 2 PLAN - ELECTRICAL

SCALE: 3/16"=1'-0"

0 5' 10'

(XX) DEMOLITION NOTES:

1. DEMO EXISTING LIGHTS AND RECEPTACLES.

(XX) CONSTRUCTION NOTES:

1. PROVIDE 6 WAY DUCTBANK TO DIGESTER CONTROL BUILDING #11.
2. UTILIZE (1) SPARE 4" DUCT IN DUCT BANK "Y" TO RUN DATA CABLES FROM AEROBIC DIGESTERS 1 AND 2 TO DIGESTER CONTROL BUILDING #1 VIA BUILDING #12. PROVIDE 2" RSC FROM DUCT ENTRANCE IN BUILDING #12 THROUGH BUILDING #12 TO BUILDING #11 SCADA PANEL.

NO.	SHEET REVISION	BY	DATE	NO.	SHEET REVISION	BY	DATE

COMMONWEALTH OF VIRGINIA
JASON A. CLARK
Lic. No. 33605
4/29/2022
PROFESSIONAL ENGINEER

WW ENGINEERS SURVEYORS PLANNERS ASSOCIATES
PO Box 4139 Lynchburg, VA 24502 Phone: 434.316.6080
968 Olympic Drive, Suite 1 Charlottesville, VA 22911 Phone: 434.984.2700
www.wwassociates.net

DESIGNED BY: WKH
DRAWN BY: STAFF
DIHR BY: HFW
WWA NUMBER: 221028.00

PROJECT: WASTEWATER TREATMENT PLANT IMPROVEMENTS TOWN OF CULPEPER, VIRGINIA

TITLE: ANAEROBIC DIGESTERS CONVERTED TO AEROBIC DIGESTERS 1 & 2 ELECTRICAL PLAN

FILE NAME:

DISCIPLINE: ELECTRICAL

SCALE: H: N/A V: N/A

SET REV. NO. –

DRAWING NUMBER: E–10

DATE: 4/29/22

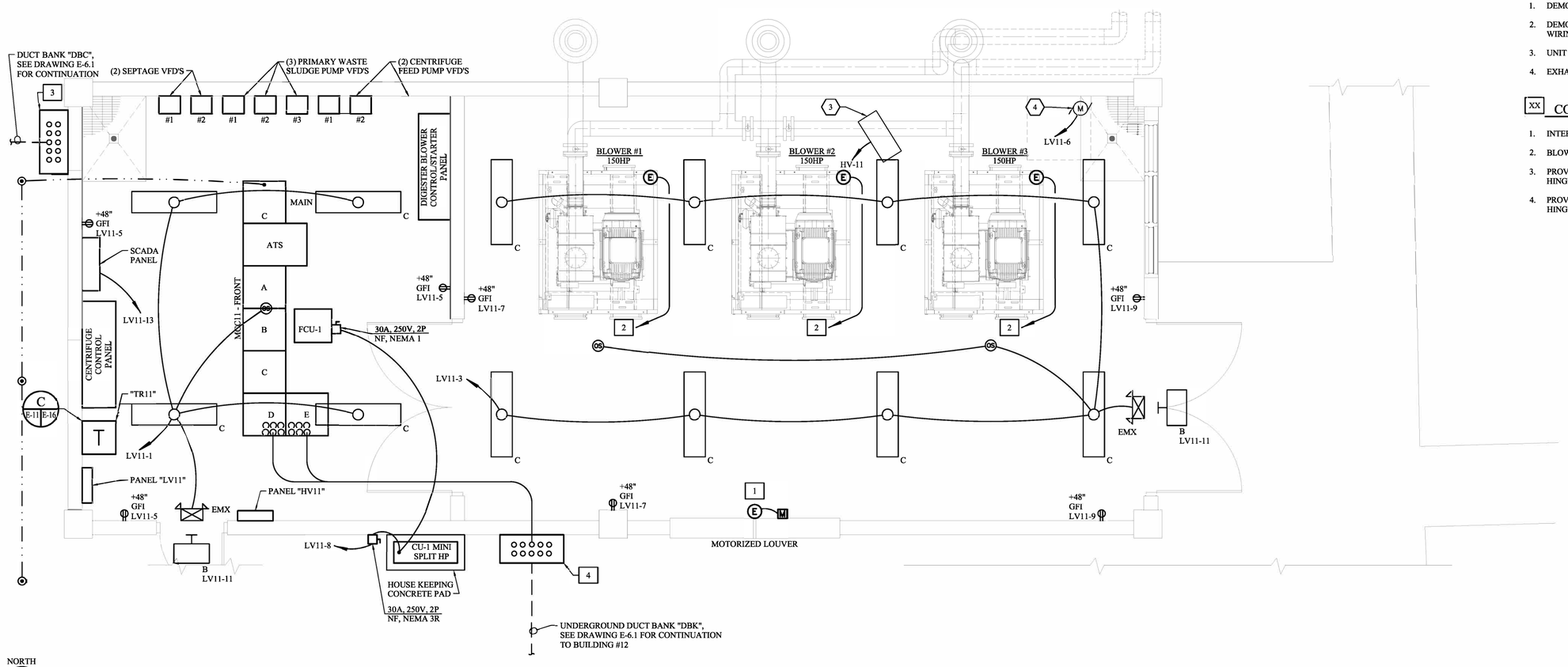

DIGESTER BLOWER 1 & 2 BUILDING #11 - POWER AND LIGHTING PLAN

SCALE: 3/8"=1'-0"

0 6" 1' 2' 3' 4' 5'

(XX) DEMOLITION NOTES:

1. DEMO LIGHTING.
2. DEMO ELECTRICAL PANELS, XFMRS AND CONTROL PANELS, CONDUIT AND WIRING COMPLETE, UON.
3. UNIT HEATER SHALL REMAIN, VERIFY VOLTAGE.
4. EXHAUST FAN TO REMAIN, SEE CONTROL DIAGRAM.

(XX) CONSTRUCTION NOTES:

1. INTERLOCK WITH EXHAUST FAN.
2. BLOWER POWER FEED FROM DIGESTER BLOWER CONTROL/STARTER PANEL.
3. PROVIDE HOFFMAN OR EQUAL 36"W x 16"D x 48"H, NEMA 4X PULL BOX WITH HINGED COVER (NO SPLICES THIS BOX).
4. PROVIDE HOFFMAN OR EQUAL 36"W x 16"D x 48"H, NEMA 4X PULL BOX WITH HINGED COVER (NO SPLICES THIS BOX).

DUCTLESS MINI SPLIT HEAT PUMP SCHEDULE

	ELECTRICAL					REFRIGERATION SYSTEM							COOLING				HEATING CAPACITY							
TAG	V	PH	HZ	MCA	MOCP	TYPE	NO/TYPE COMPRESSORS	NO REFRIG CIRCUITS	SUCTION SIZE	LIQUID SIZE	INDOOR UNIT TYPE	INDOOR FAN CFM	TOTAL BTUH	SENS BTUH	SEER	EER	47 DEG F BTUH	17 DEG F BTUH	5 DEG F BTUH	HSPF	COP	SOUND RATING dBA	WEIGHT LB	BASIS OF DESIGN (OR EQUAL)
FCU-1	208-230	1	60	12.8	15	R-401A	(1) HERMETICALLY SEALED SWING	1	3/8	1/4	CEILING CASSETTE	275-498	17400	12840	19.3	12.5	21600	14200	9610	10.1	3.36	40	39	DAIKIN FFQ18Q2VJU
HP-1												---										54	97	DAIKIN RX18RMVJU9A

1. PROVIDE REQUIRED LENGTH OF REFRIGERANT PIPING AND REFRIGERANT CHARGE.
2. PROVIDE WIRED ELECTRONIC 24 HR PROGRAMMABLE AUTO-SWITCHOVER THERMOSTAT WITH FILTER INDICATOR.
3. PROVIDE MICROPROCESSOR CONTROLS CAPABLE OF CONTROLLING FAN AND COMPRESSOR SPEED BASED ON SPACE LOAD.
4. PROVIDE INTEGRAL CONDENSATE PUMP.
5. PROVIDE BAKED EPOXY CORROSION COATING ON COPPER SURFACES SUITABLE FOR 5 PPM HYDROGEN SULFIDE.
6. PROVIDE MERV 8 FILTER.
7. PROVIDE 5 YEAR WARRANTY.
8. POWER INDOOR UNIT FROM OUTDOOR UNIT. DISCONNECT SWITCH AT BOTH UNITS BY ELECTRICAL.

NO.	SHEET REVISION	BY	DATE	NO.	SHEET REVISION	BY	DATE

COMMONWEALTH OF VIRGINIA
JASON A. CLARK
Lic. No. 33605
4/29/2022
PROFESSIONAL ENGINEER

WWA ASSOCIATES
ENGINEERS SURVEYORS PLANNERS
PO Box 4119 Lynchburg, VA 24502 Phone: 434.316.6080
968 Olympia Drive, Suite 1 Charlottesville, VA 22901 Phone: 434.984.3700
www.wwassociates.net

DESIGNED BY: WKH
DRAWN BY: STAFF
DIHR BY: HFW
WWA NUMBER: 221028.00

PROJECT: WASTEWATER TREATMENT PLANT IMPROVEMENTS TOWN OF CULPEPER, VIRGINIA

TITLE: DIGESTER CONTROL (GAS RECOVERY) BUILDING CONVERTED TO DIGESTER BLOWER BUILDING #11 ELECTRICAL PLAN

FILE NAME:
DISCIPLINE: ELECTRICAL
SCALE: H: N/A V: N/A

SET REV. NO. –
DRAWING NUMBER: E-11
DATE: 4/29/22

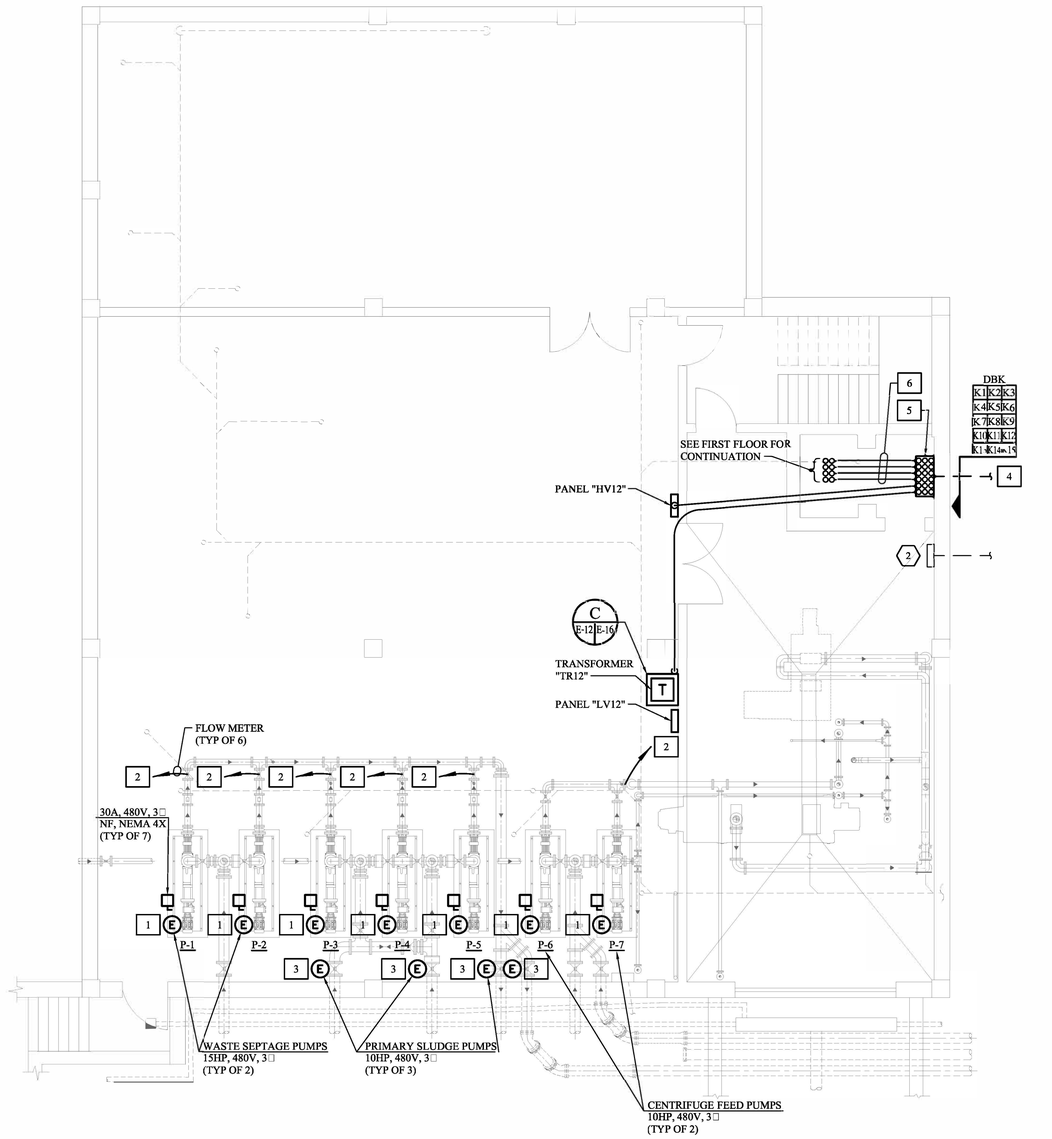

NORTH

SLUDGE PROCESSING BUILDING #12 BASEMENT - ELECTRICAL PLAN (1)

SCALE: 3/16"=1'-0"

0 5' 10'

(XX) DEMOLITION NOTES:

1. DEMO PER CIVIL DRAWING C-_.
2. DEMO MCC12 AND MCC13 480 FEED (CONDUITS AND WIRE) BACK TO THIS JUNCTION BOX. EXISTING SHALL BE TERMINATED WITH 600V TERMINATIONS AND LABELED "FED FROM EXISTING SWBD BUILDING.

[XX] CONSTRUCTION NOTES:

1. PROVIDE CONDUIT AND WIRING FROM PUMPS TO VFD'S IN BUILDING #11 VIA DUCT BANK PER DRAWING E-_.
2. SEE PANEL "LV12" FOR BRANCH CIRCUITS. PROVIDE SEPARATE 3/4" CONDUIT FOR DATA CABLE TO SCADA PANEL LOCATED IN BUILDING #11.
3. SEE PANEL "HV12" FOR BRANCH CIRCUITS. PROVIDE SEPARATE 3/4" CONDUIT FOR DATA CABLE TO SCADA PANEL LOCATED IN BUILDING #11.
4. SEE DRAWING E-6.1 FOR CONTINUATION.
5. PROVIDE HOFFMAN OR EQUAL 36"W x 16"D x 48"H, NEMA 4X PULL BOX WITH HINGED COVER (NO SPLICES THIS BOX).
6. INSTALL CONDUITS AS HIGH AS POSSIBLE AND TURN UP THROUGH SHAFT TO FIRST FLOOR CEILING AND ONTO STARTERS/DISCONNECTS SHOWN.

NO.	SHEET REVISION	BY	DATE	NO.	SHEET REVISION	BY	DATE

COMMONWEALTH OF VIRGINIA
JASON A. CLARK
Lic. No. 33605
4/29/2022
PROFESSIONAL ENGINEER

WWA ENGINEERS SURVEYORS PLANNERS ASSOCIATES
PO Box 4119 Lynchburg, VA 24502 Phone: 434.316.6080
968 Olympia Drive, Suite 1 Charlottesville, VA 22901 Phone: 434.984.2700
www.wwassociates.net

DESIGNED BY: WKH
DRAWN BY: STAFF
DIHR BY: HFW
WWA NUMBER: 221028.00

PROJECT: WASTEWATER TREATMENT PLANT IMPROVEMENTS TOWN OF CULPEPER, VIRGINIA

TITLE: SLUDGE PROCESSING BUILDING (BASEMENT) ELECTRICAL PLAN

SET REV. NO. –

DRAWING NUMBER: E–12

FILE NAME:

DISCIPLINE: ELECTRICAL

SCALE: H: N/A V: N/A

DATE: 4/29/22

DEMOLITION NOTES:

1. REPLACE PA6 WITH COMPLETE NEW PANEL PER SCHEDULE.
2. REPLACE TRANSFORMER PER DRAWING E-3.
3. DEMO MCC12, 12A AND 13.

CONSTRUCTION NOTES:

1. MOTORIZED VALVE, PROVIDE CONDUIT AND WIRING FROM PUMPS TO CENTRIFUGE CONTROL PANELS IN BUILDING #11 VIA DUCT BANK PER DRAWING E-6.1 AND E-12.
2. POLYMER BLEND/FEED SYSTEM, PROVIDE 3/4" CONDUIT TO SCADA PANEL.
3. PROVIDE 30A, 3P, 480V, COMBO STARTER, NEMA SIZE1, USE TO INTERCEPT EXISTING FAN #7 WIRING WITH NEW FROM PANEL "PA6".
4. PROVIDE 30A, 3P, 480V, COMBO STARTER, NEMA SIZE1, USE TO INTERCEPT EXISTING FAN #2 WIRING WITH NEW FROM PANEL "PA6".
5. PROVIDE 30A, 3P, 480V, COMBO STARTER, NEMA SIZE1, USE TO INTERCEPT EXISTING FAN #3 WIRING WITH NEW FROM PANEL "PA6".
6. PROVIDEE 30A, 3P, 480V, COMBO STARTER, NEMA SIZE1, USE TO INTERCEPT EXISTING AHU #1 WIRING WITH NEW FROM PANEL "PA6".
7. PROVIDE 30A, 3P, 480V, NF USE TO INTERCEPT EXISTING AIR COMPRESSOR #1 WIRING WITH NEW FROM PANEL "PA6".
8. PROVIDE 30A, 3P, 480V, NF USE TO INTERCEPT EXISTING AIR COMPRESSOR #2 WIRING WITH NEW FROM PANEL "PA6".
9. PROVIDE 30A, 3P, 480V, NF USE TO INTERCEPT EXISTING ROLL UP DOOR #1 WIRING WITH NEW FROM PANEL "PA6".
10. PROVIDE 30A, 3P, 480V, NF USE TO INTERCEPT EXISTING ROLL UP DOOR #2 WIRING WITH NEW FROM PANEL "PA6".
11. PROVIDE 480V CIRCUIT PER DRAWING E-3.

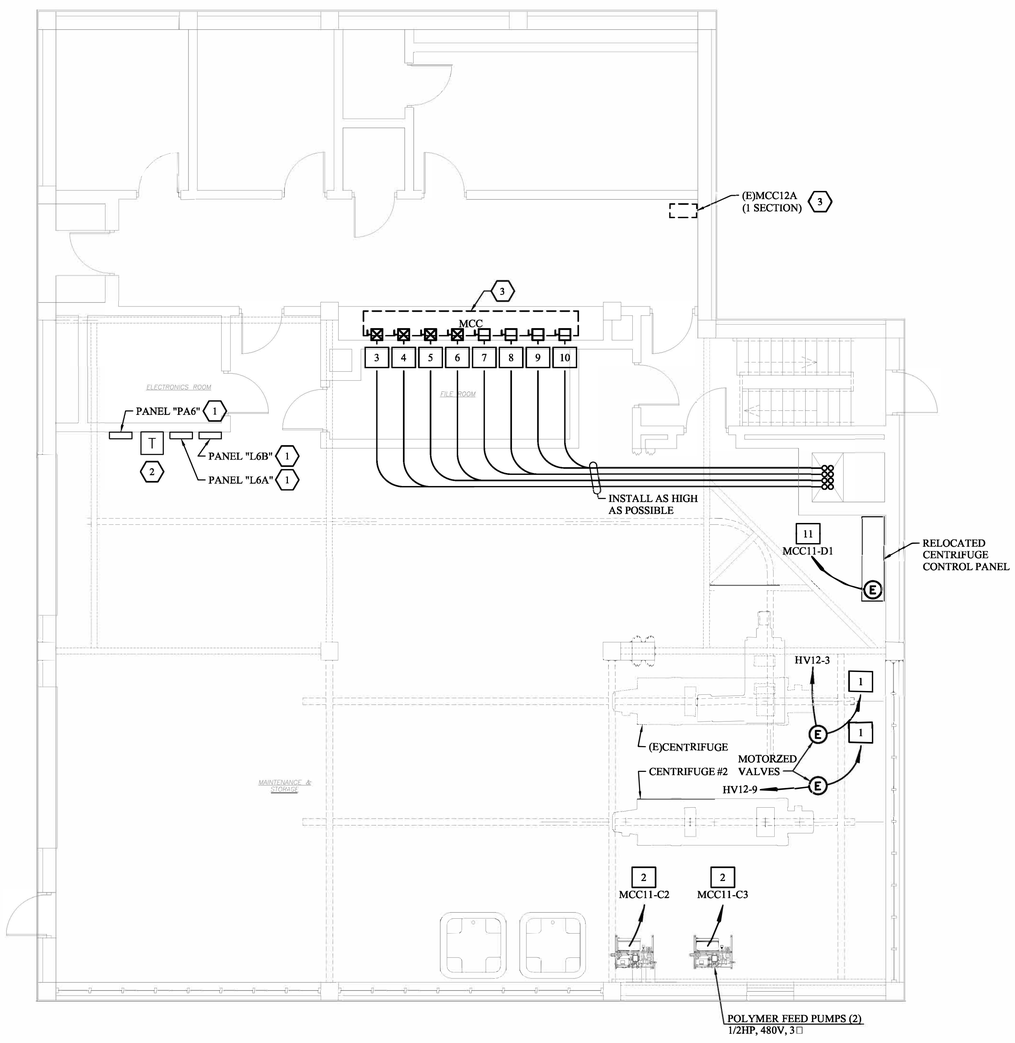

NORTH

SLUDGE PROCESSING BUILDING #12 FIRST FLOOR - POWER AND LIGHTING PLAN

SCALE: 3/16"=1'-0"

0 5' 10'

NO.	SHEET REVISION	BY	DATE	NO.	SHEET REVISION	BY	DATE

COMMONWEALTH OF VIRGINIA
JASON A. CLARK
Lic. No. 33605
4/29/2022
PROFESSIONAL ENGINEER

WW ASSOCIATES
ENGINEERS SURVEYORS PLANNERS
PO Box 4119, Lynchburg, VA 24502, Phone: 434.316.6080
968 Olympic Drive, Suite 1, Charlottesville, VA 22911, Phone: 434.984.2700
www.wwassociates.net

DESIGNED BY: WKH	PROJECT: WASTEWATER TREATMENT PLANT IMPROVEMENTS TOWN OF CULPEPER, VIRGINIA		SET REV. NO. –
DRAWN BY: STAFF	TITLE: SLUDGE PROCESSING BUILDING FIRST FLOOR (CENTRIFUGE) ELECTRICAL PLAN		DRAWING NUMBER: E-13
DIHR BY: HFW			
WWA NUMBER: 221028.00	FILE NAME:	DISCIPLINE: ELECTRICAL / SCALE: H: N/A V: N/A	DATE: 4/29/22

XX CONSTRUCTION NOTES:

1. PROVIDE 20 AMP SINGLE POLE BREAKER IN PANEL "LP-ST" AND 3 #12, 3/4" TO FLOW METER.
2. PROVIDE 3/4" DATA CONDUIT TO SCADA PANEL IN ELECTRICAL ROOM.

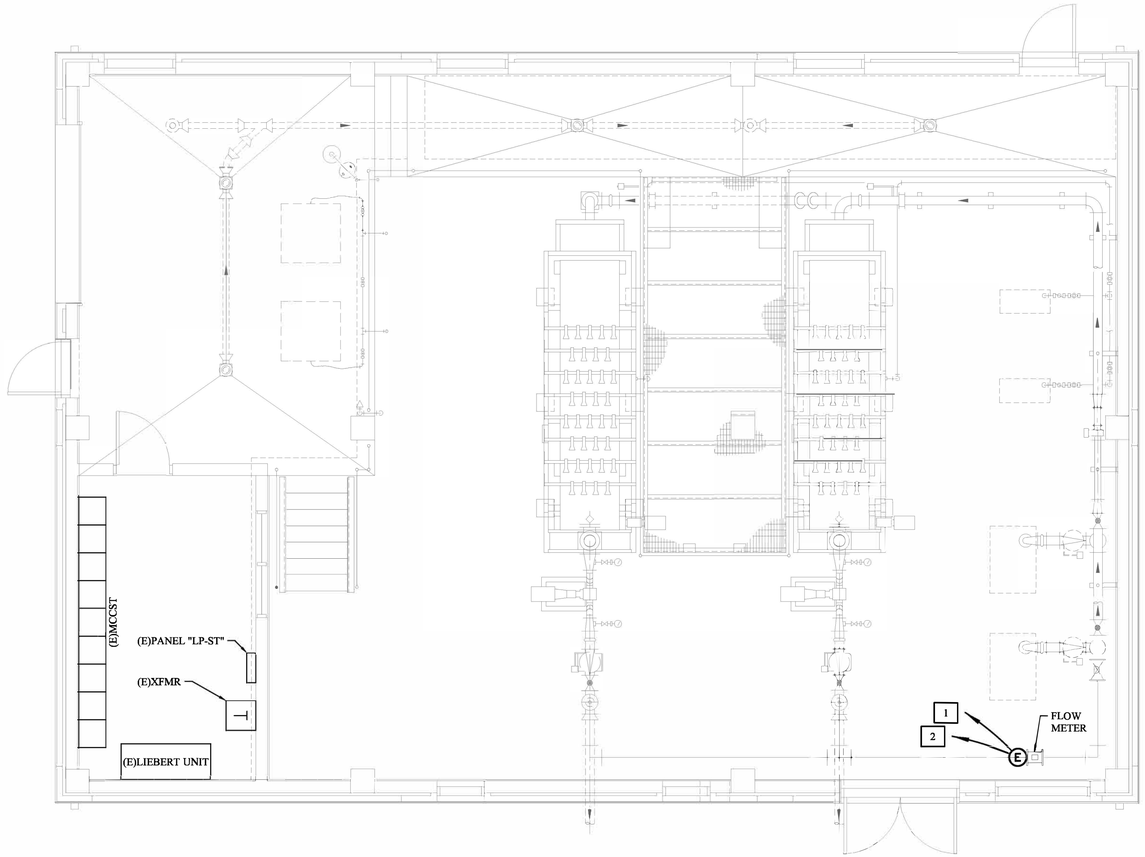

NORTH

SLUDGE THICKENING BUILDING #9 - ELECTRICAL PLAN

SCALE: 1/4"=1'-0"

0 1' 5' 10'

NO.	SHEET REVISION	BY	DATE	NO.	SHEET REVISION	BY	DATE

COMMONWEALTH OF VIRGINIA
JASON A. CLARK
Lic. No. 33605
4/29/2022
PROFESSIONAL ENGINEER

WW ASSOCIATES
ENGINEERS SURVEYORS PLANNERS
PO Box 4119, Lynchburg, VA 24502, Phone: 434.316.6080
968 Olympia Drive, Suite 1, Charlottesville, VA 22911, Phone: 434.984.2700
www.wwassociates.net

DESIGNED BY: WKH	PROJECT: WASTEWATER TREATMENT PLANT IMPROVEMENTS TOWN OF CULPEPER, VIRGINIA		SET REV. NO. –
DRAWN BY: STAFF	TITLE: SLUDGE THICKENING BUILDING ELECTRICAL PLAN		DRAWING NUMBER: E-14
DIHR BY: HFW			
WWA NUMBER: 221028.00	FILE NAME:	DISCIPLINE: ELECTRICAL	SCALE: H: N/A V: N/A	DATE: 4/29/22

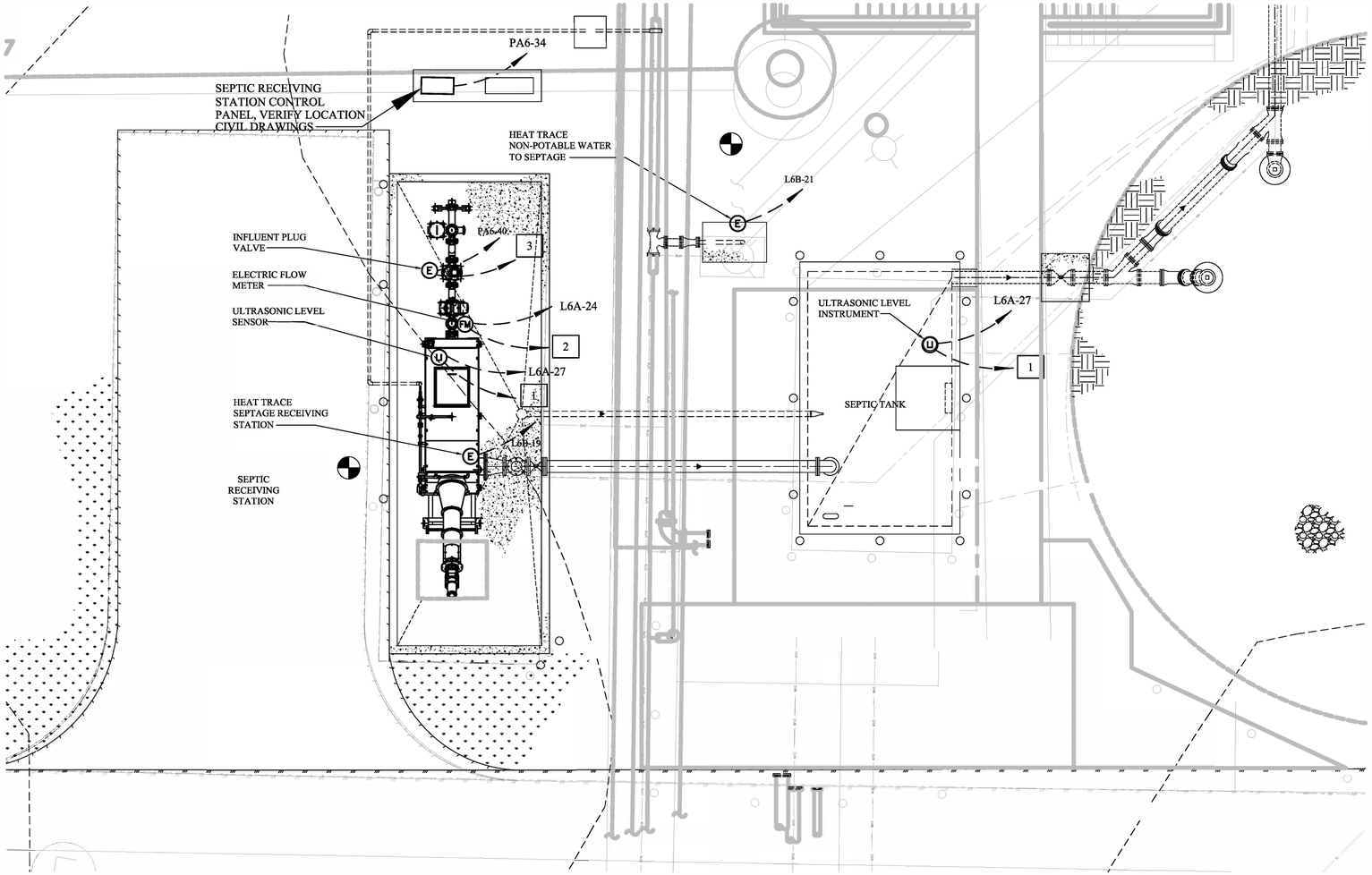

NORTH

PARTIAL SITE PLAN - WASTE SEPTIC RECEIVING STATION

SCALE: 1/4"=1'-0"

0 1' 5' 10'

XX CONSTRUCTION NOTES:

1. PROVIDE 1" PVC SCH 80 FROM TANK LEVEL INSTRUMENT TO SCADA PANEL IN BUILDING #11, VIA EXISTING DUCT BANKS PER DRAWING E-6.
2. PROVIDE 1" PVC SCH 80 FROM FLOW METER INSTRUMENT TO SCADA PANEL IN BUILDING #11, VIA EXISTING DUCT BANKS PER DRAWING E-6.
3. PROVIDE 1" PVC SCH 80 FROM INFLUENT PLUG VALVE TO SCADA PANEL IN BUILDING #11, VIA EXISTING DUCT BANKS PER DRAWING E-6.

NO.	SHEET REVISION	BY	DATE	NO.	SHEET REVISION	BY	DATE

COMMONWEALTH OF VIRGINIA
JASON A. CLARK
Lic. No. 33605
4/29/2022
PROFESSIONAL ENGINEER

WWA ENGINEERS SURVEYORS PLANNERS ASSOCIATES
PO Box 4119 Lynchburg, VA 24502 Phone: 434.316.6080
968 Glyngia Drive, Suite 1 Charlottesville, VA 22911 Phone: 434.984.2700
www.wwassociates.net

DESIGNED BY: WKH	PROJECT: WASTEWATER TREATMENT PLANT IMPROVEMENTS TOWN OF CULPEPER, VIRGINIA		SET REV. NO. –
DRAWN BY: STAFF	TITLE: SEPTIC RECEIVING STATION ELECTRICAL SITE PLAN		DRAWING NUMBER: E-15
DIHR BY: HFW			
WWA NUMBER: 221028.00	FILE NAME:	DISCIPLINE: ELECTRICAL	SCALE: H: N/A V: N/A	DATE: 4/29/22

XX CONSTRUCTION NOTES:

1. RACK SUPPORT NOTE ????????????????????
2. DUPLEX 120V, 20AMP, GFI, WP RECEPTACLE.

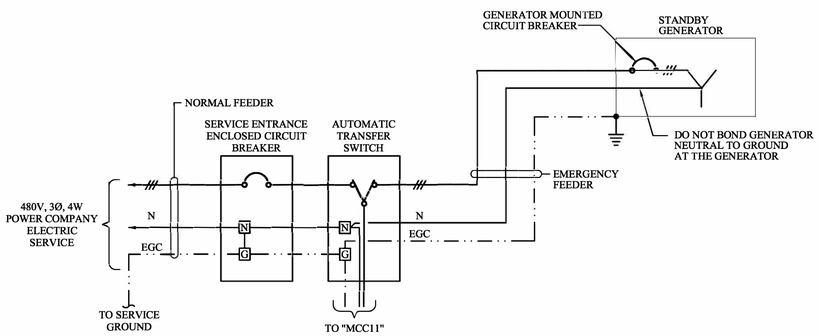

A E-3 E-16 CONNECTION DIAGRAM - NEUTRAL & GROUND CONNECTIONS
SCALE: NONE

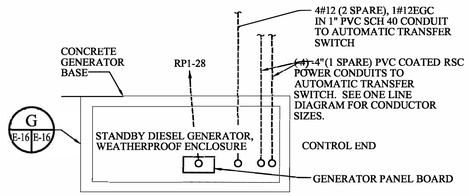

B E-3 E-16 GENERATOR PLAN
SCALE: NONE

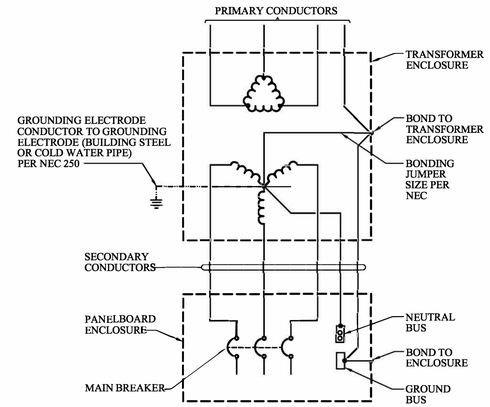

C E-2.1 E-2.2 E-3 E-2 E-16 DRY TYPE TRANSFORMER WIRING DETAIL
SCALE: NONE

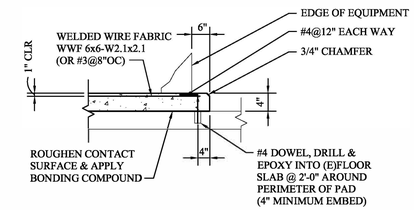

NOTES:
1. CONCRETE SHALL HAVE A MIN f'c = 3,000 PSI IN 28 DAYS.
2. REINFORCEMENT SHALL BE GRADE 60.
3. WATER AND CEMENT RATIO = .45.
4. AIR ENTRAINMENT SHALL BE 6% (±1%).
5. CONTRACTOR SHALL VERIFY MINIMUM REQUIRED HEIGHT OF EQUIPMENT ABOVE PAD FOR INSTALLATION OF CONDENSATE DRAIN.

D E-3 E-16 CONCRETE HOUSEKEEPING PAD
SCALE: NONE

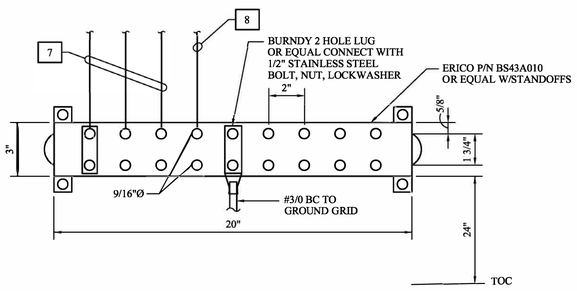

E E- E-16 DATA - TELEPHONE GROUND BUS BAR DETAIL
SCALE: NONE

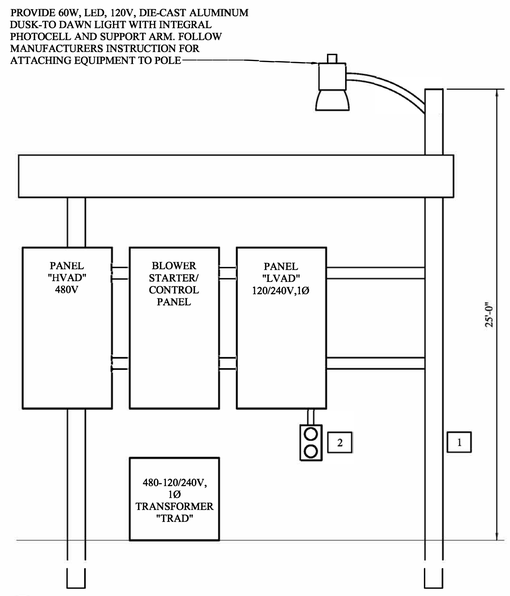

F E-9 E-16 LIFT STATION ELECTRIC SERVICE AND DISTRIBUTION RACK DETAIL
SCALE: NONE

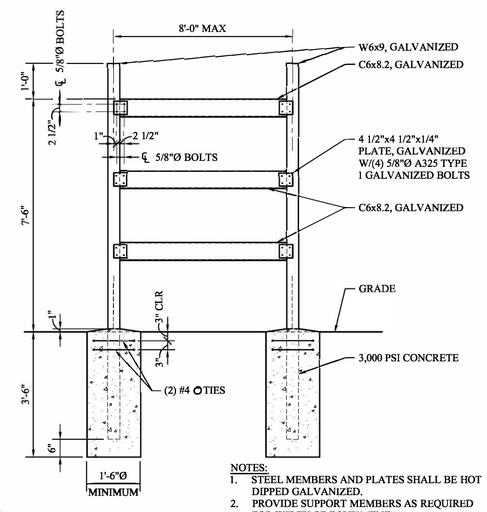

NOTES:
1. STEEL MEMBERS AND PLATES SHALL BE HOT DIPPED GALVANIZED.
2. PROVIDE SUPPORT MEMBERS AS REQUIRED FOR WIDTH OF EQUIPMENT.

G E- E-16 ELECTRICAL RACK DETAIL
SCALE: NONE

NO.	SHEET REVISION	BY	DATE	NO.	SHEET REVISION	BY	DATE

COMMONWEALTH OF VIRGINIA
JASON A. CLARK
Lic. No. 33605
4/29/2022
PROFESSIONAL ENGINEER

WWA ASSOCIATES
ENGINEERS SURVEYORS PLANNERS
PO Box 4119, Lynchburg, VA 24502, Phone: 434.316.6080
968 Olympia Drive, Suite 1, Charlottesville, VA 22911, Phone: 434.984.2700
www.wwassociates.net

DESIGNED BY: WKH	PROJECT: WASTEWATER TREATMENT PLANT IMPROVEMENTS TOWN OF CULPEPER, VIRGINIA		SET REV. NO. –
DRAWN BY: STAFF	TITLE: DETAILS		DRAWING NUMBER: E–16
DIHR BY: HFW			
WWA NUMBER: 221028.00	FILE NAME:	DISCIPLINE: ELECTRICAL	SCALE: H: N/A V: N/A	DATE: 4/29/22

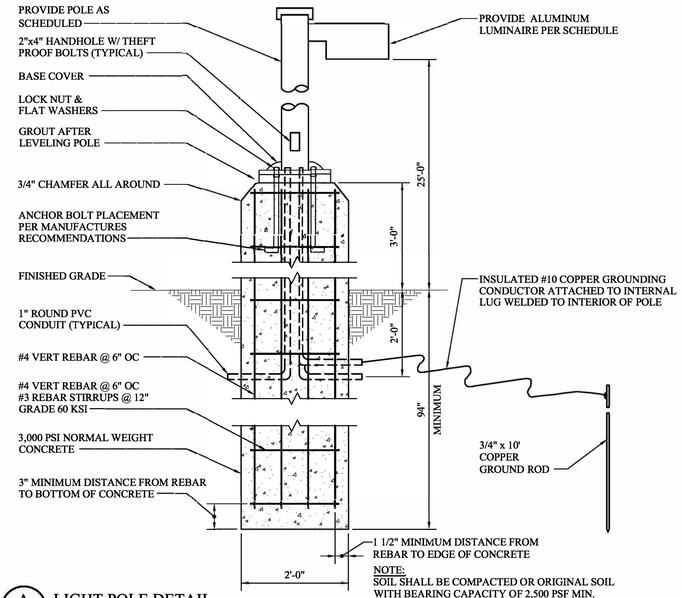

NOTE:
SOIL SHALL BE COMPACTED OR ORIGINAL SOIL WITH BEARING CAPACITY OF 2,500 PSF MIN.

A (E-5 | E-16.1) LIGHT POLE DETAIL
SCALE: NONE

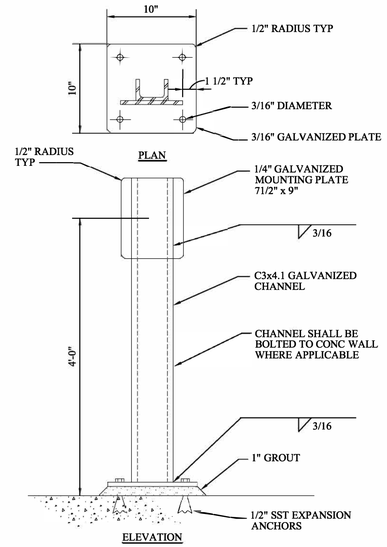

B (E- | E-16.1) LOCAL PUSH BUTTON DISCONNECT & INSTRUMENT MOUNTING PEDESTAL DETAIL
SCALE: NONE

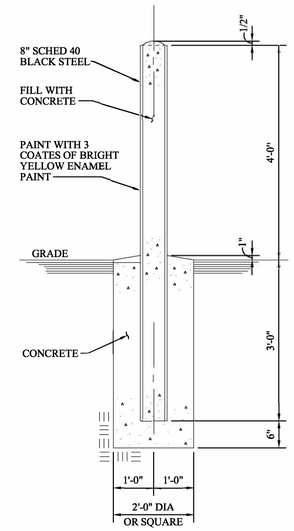

C (E- | E-16.1) BOLLARD DETAIL
SCALE: NONE

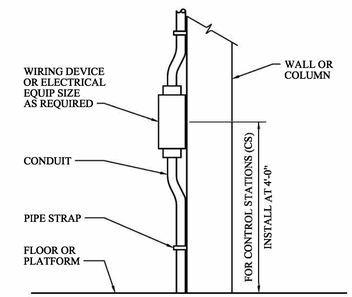

D (E- | E-16.1) WALL OR COLUMN MOUNTED DEVICE
SCALE: NONE

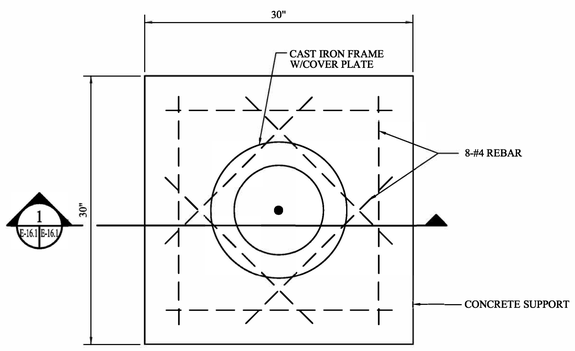

E (E- | E-16.1) DETAIL - GROUND DISCONNECT TEST WELL PLAN VIEW
SCALE: NONE

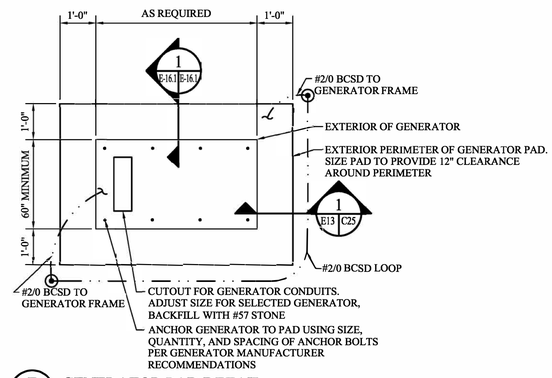

F (E- | E-16.1) GENERATOR PAD DETAIL
SCALE: NONE

CONCRETE AND REINFORCEMENT NOTES:

1. GENERATOR PAD SOIL BEARING CAPACITY SHALL BE A MINIMUM 1,500 PSF. CONTRACTOR SHALL ENGAGE INSPECTOR TO VERIFY SOIL BEARING CAPACITY AND REINFORCEMENT PLACEMENT PRIOR TO CONCRETE PLACEMENT. SUBMIT INSPECTION REPORT TO A/E FOR REVIEW.
2. CONCRETE SHALL BE NORMAL WEIGHT 145 PCF WITH A MINIMUM COMPRESSIVE STRENGTH OF 4,000 PSI AT 28 DAYS.
3. REINFORCING BARS SHALL BE ROLLED FROM NEW BILLET STEEL CONFORMING WITH ASTM A615/A615M, GRADE 60, UNLESS OTHERWISE NOTED.
4. THE FOLLOWING MINIMUM CONCRETE COVER SHALL BE PROVIDED FOR ALL REINFORCEMENT, UNLESS OTHERWISE NOTED:
   A. CONCRETE CAST AGAINST AND PERMANENTLY EXPOSED TO EARTH: 3"
   B. CONCRETE EXPOSED TO EARTH OR WEATHER: #5 BAR AND SMALLER: 1 1/2"
5. LAP ALL REINFORCING SPLICES AT LEAST 48 BAR DIAMETERS (24" MINIMUM) UNLESS OTHERWISE NOTED.
6. ALL REINFORCING SHALL BE SECURELY WIRED TOGETHER IN FORMS AS CALLED FOR IN "PLACING REINFORCING BARS" BY CRSI.
7. STONE BASE SHALL BE 4" THICK, #57 STONE.

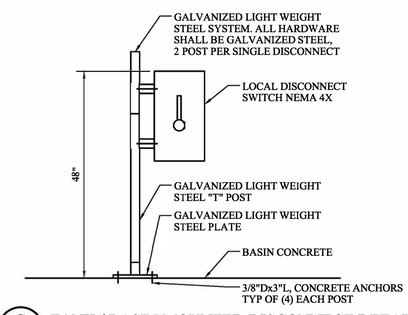

G (E- | E-16.1) TANK / BASIN MOUNTED DISCONNECT DETAIL
SCALE: NONE

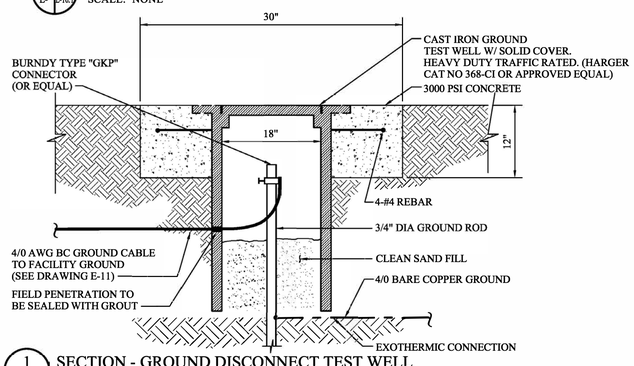

1 (E-16.1 | E-16.1) SECTION - GROUND DISCONNECT TEST WELL
SCALE: NONE

NO.	SHEET REVISION	BY	DATE	NO.	SHEET REVISION	BY	DATE

COMMONWEALTH OF VIRGINIA
JASON A. CLARK
Lic. No. 33605
4/29/2022
PROFESSIONAL ENGINEER

WWA ASSOCIATES
ENGINEERS SURVEYORS PLANNERS
PO Box 4119, Lynchburg, VA 24502, Phone: 434.316.6080
968 Olympia Drive, Suite 1, Charlottesville, VA 22911, Phone: 434.994.2700
www.wwassociates.net

DESIGNED BY: WKH	PROJECT: WASTEWATER TREATMENT PLANT IMPROVEMENTS TOWN OF CULPEPER, VIRGINIA		SET REV. NO. –
DRAWN BY: STAFF	TITLE: DETAILS		DRAWING NUMBER: E-16.1
DIHR BY: HFW			
WWA NUMBER: 221028.00	FILE NAME:	DISCIPLINE: ELECTRICAL	SCALE: H: N/A V: N/A	DATE: 4/29/22

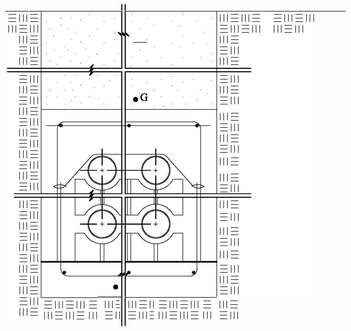

* THE DISTANCE BETWEEN ADJACENT DUCTS SHALL BE 3" IN BOTH ROWS AND COLUMNS.

NOTE: REINFORCED DUCTBANK SHALL BE INSTALLED WHERE DUCTBANKS CROSS BENEATH ROADS, PARKING LOTS AND OTHER PAVED AREAS.

A E-16.2 TYPICAL REINFORCED DUCTBANK
SCALE: NONE

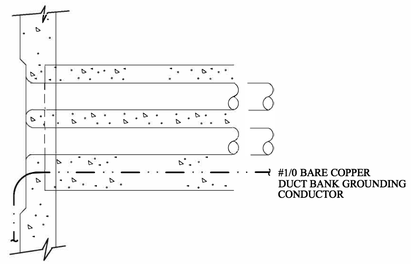

B E-16.2 TYPICAL DUCTBANK ENTRANCE INTO HANDHOLES
SCALE: NONE

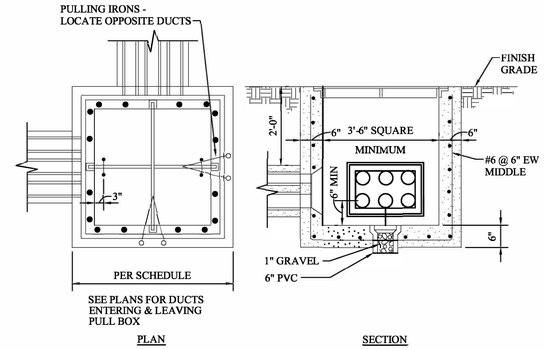

C E-16.2 TYPICAL MANHOLE BOX DETAIL (SEE SCHEDULE ON DRAWING E-17)
SCALE: NONE

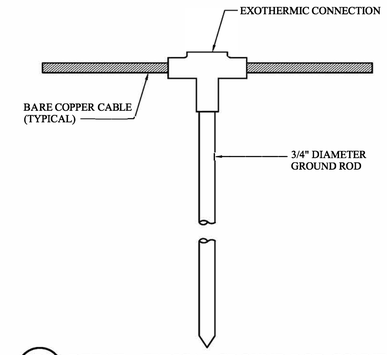

D E-16.2 DETAIL - TYPICAL GROUND ROD CONNECTION
SCALE: NONE

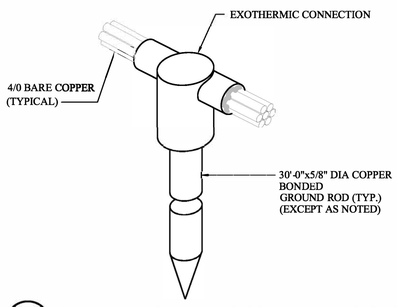

E E-16.2 DETAIL - EXOTHERMIC CONN WIRE TO GROUND ROD
SCALE: NONE

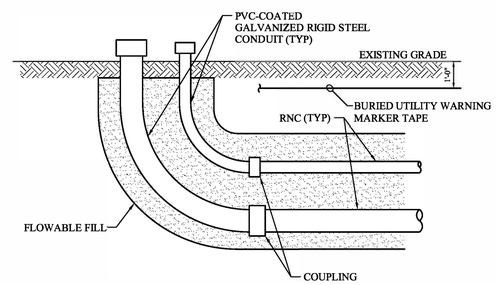

F E-16.2 MULTIPLE CONDUITS TRANSITION - TYP STUB UP DETAIL
SCALE: NONE

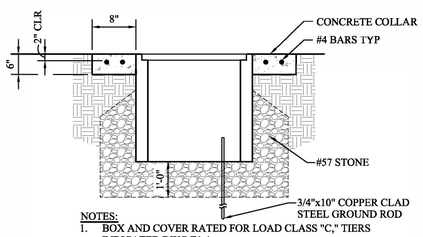

NOTES:
1. BOX AND COVER RATED FOR LOAD CLASS "C," TIERS INDICATED DWG E1.4.
2. BOXES TO BE UL LISTED.
3. COVER TO BE FULL SIZE.
4. BOX TO BE SIZED PER PLANS.
5. COVER TO BE LABELED "ELECTRICAL."
6. ENDS OF CONDUIT SHALL BE SEALED WITH ELECTRICAL PUTTY AFTER WIRING IS COMPLETE.
7. CONDUITS INTO BOTTOM OR SIDE OF BOX BASED UPON FIELD CONDITIONS (ELEVATIONS).

G E-16.2 TYPICAL PULL BOX DETAIL
SCALE: NONE

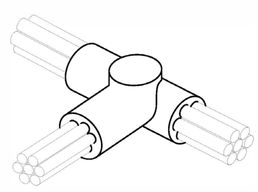

H E-16.2 DETAIL - EXOTHERMIC CONNECTION WIRE TO WIRE
SCALE: NONE

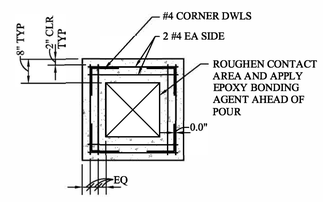

I E-16.2 PULL BOX CONCRETE COLLAR DETAIL
SCALE: NONE

NO.	SHEET REVISION	BY	DATE	NO.	SHEET REVISION	BY	DATE

COMMONWEALTH OF VIRGINIA
JASON A. CLARK
Lic. No. 33605
4/29/2022
PROFESSIONAL ENGINEER

WW ASSOCIATES
ENGINEERS SURVEYORS PLANNERS
PO Box 4130 Lynchburg, VA 24502 Phone: 434.316.6080
968 Glenpole Drive, Suite 1 Charlottesville, VA 22911 Phone: 434.984.2700
www.wwassociates.net

DESIGNED BY: WKH	PROJECT: WASTEWATER TREATMENT PLANT IMPROVEMENTS TOWN OF CULPEPER, VIRGINIA		SET REV. NO. —
DRAWN BY: STAFF	TITLE: DETAILS		DRAWING NUMBER: E-16.2
DIHR BY: HFW			
WWA NUMBER: 221028.00	FILE NAME:	DISCIPLINE: ELECTRICAL	SCALE: H: N/A V: N/A	DATE: 4/29/22

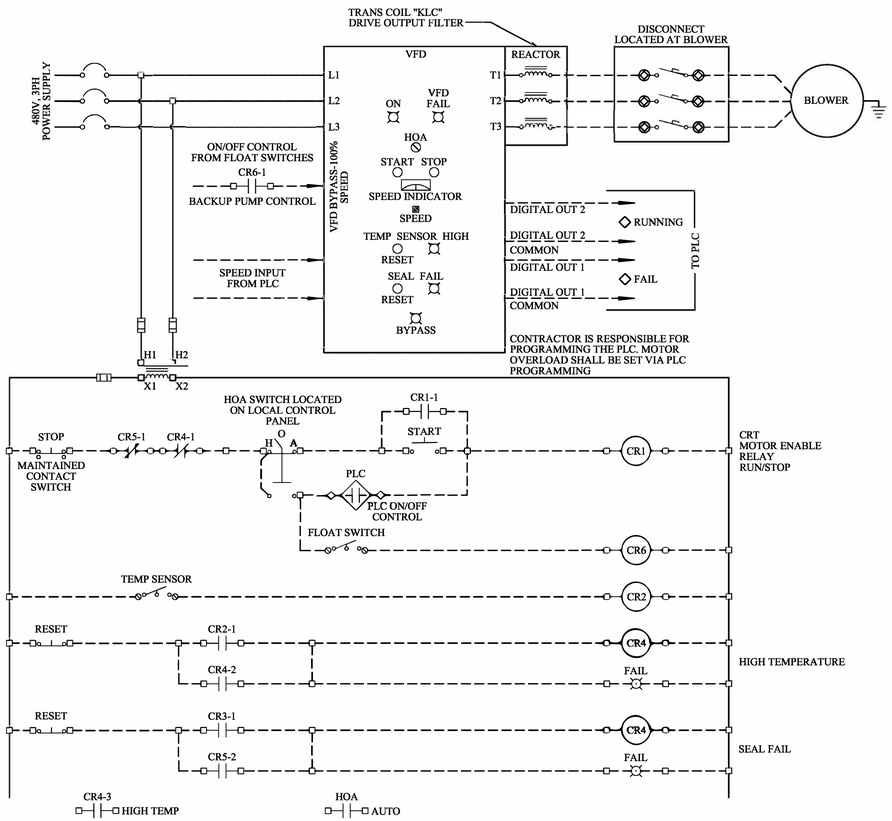

BLOWER VFD CONTROL SCHEMATIC (TYPICAL)

SCALE: NONE

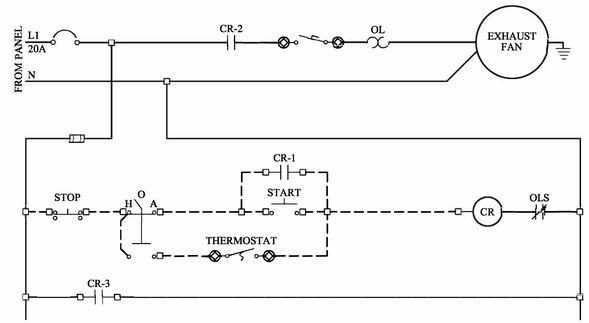

120V SINGLE PHASE EXHAUST FAN SCHEMATIC

SCALE: NONE

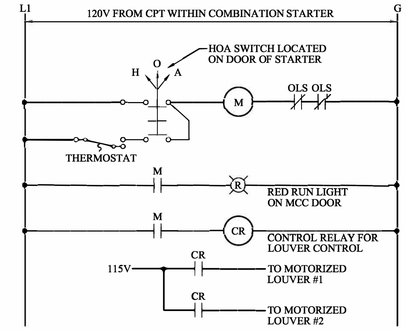

208V, 1Ø EXHAUST FAN AND LOUVER CONTROL SCHEMATIC

SCALE: NONE

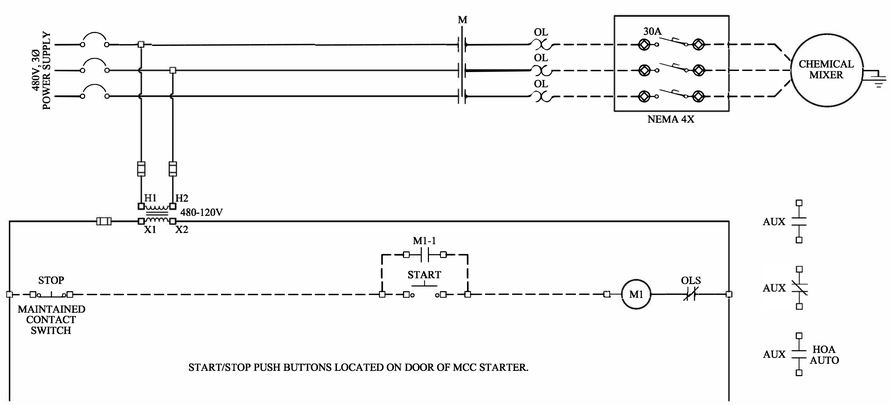

CHEMICAL MIXER SCHEMATIC

SCALE: NONE

NO.	SHEET REVISION	BY	DATE	NO.	SHEET REVISION	BY	DATE

COMMONWEALTH OF VIRGINIA
JASON A. CLARK
Lic. No. 33605
4/29/2022
PROFESSIONAL ENGINEER

WWA ASSOCIATES
ENGINEERS SURVEYORS PLANNERS
PO Box 4119, Lynchburg, VA 24502, Phone: 434.316.6080
968 Olympia Drive, Suite 1, Charlottesville, VA 22911, Phone: 434.994.2700
www.wwassociates.net

DESIGNED BY: WKH	PROJECT: WASTEWATER TREATMENT PLANT IMPROVEMENTS TOWN OF CULPEPER, VIRGINIA		SET REV. NO. –
DRAWN BY: STAFF	TITLE: DETAILS		DRAWING NUMBER: E-16.3
DIHR BY: HFW			
WWA NUMBER: 221028.00	FILE NAME:	DISCIPLINE: ELECTRICAL	SCALE: H: N/A V: N/A	DATE: 4/29/22

NEMA 12 ENCLOSURE
PROVIDE PROVISIONS FOR EXPANSION IN THE FUTURE

MOTOR CONTROL CENTER "MCC8" DRAIN PUMP STATION BLDG #8

MCC RATING: 48O VOLTS, 3 PHASE, 4 WIRE MINIMUM BUS BRACING & OVERCURRENT DEVICE
INTERRUPTING RATING: 65,000 SYM RMS AMPS
BUS RATINGS: 600 AMP MAIN BUS, 100% NEUTRAL BUS, 100% GROUND BUS, SERVICE ENTRANCE RATED

SPACE CIRCUIT NO.	LOAD DESCRIPTION	CONNECTED			STARTER		OVERCURRENT PROTECTION				BRANCH CIRCUIT					REMARKS
											CONDUCTORS				CONDUIT SIZE	
		LOAD HP	LOAD KVA	FLA	NEMA SIZE	TYPE	TYPE	MCP RATING (AMPS)	MCCB FRAME (AMPS	TRIP SETTING (AMPS)	PHASE	NEUTRAL	CONTROL	EGC		
A1	MAIN SERVICE DISCONNECT	-	-		-	-	MCCB	-	250	250						
A2	TRANSFORMER "TR8"	-	45.0	54.0	-	-	MCCB	-	150	70	4	4	-	8	1 1/2"	FEEDS PANEL "LV8"
A3	SPARE						MCCB		150							WITH ADJUSTABLE TRIPS
A4	SPACE															
A5	SPACE															
B1	T8 WASTEWATER PUMP 1	30.0	31.9	40.0	3	SS	-		150	70	6	-	-	8	1 1/2"	WITH HOA SWITCH
B2	T6 WASTEWATER PUMP 2	40.0	41.4	52.0	3	SS	-		150	100	6	-	-	8	1 1/2"	WITH HOA SWITCH
B3	SPARE				1	FVNR			150							WITH HOA SWITCH
B3	SPACE															
B4	SPACE															
B5	SPACE															
C1	T8 WASTEWATER PUMP 2	30.0	31.9	40.0	3	SS	-		150	70	6	-	-	8	1 1/2"	WITH HOA SWITCH
C2	SPARE				3	SS			150	70						WITH HOA SWITCH
C3	SPACE															
C4	SPACE															
C5	SPACE															
C6	SPACE															

PANEL "LV8" SCHEDULE

PANELBOARD CHARACTERISTICS:
VOLTS: 208/120
PHASES: 3
WIRES: 4
SOLID NEUTRAL, GROUND BAR

PHASE TO PHASE VOLTS: 208
PHASE TO NEUT. VOLTS: 120

100 AMP MAIN CIRCUIT BREAKER
MINIMUM SHORT CIRCUIT RATING: 14,000 RMS SYM AMPS
WITH DOOR-IN-DOOR ENCLOSURE

CKT. NO.	POLE NO.	DESCRIPTION	LOAD TYPE	CONN. KVA	CONN. AMPS A	CONN. AMPS B	CONN. AMPS C	BREAKER P	BREAKER AT	NO. & WIRE SIZE PHASE	NO. & WIRE SIZE NEUT.	NO. & WIRE SIZE GND	COND. SIZE
1	1	LIGHTING DRAIN PUMP STATION	L	1.0	8.3			1	20	12	12		
3	3	RECEPTACELS	R	0.4		3.3		1	20	12	12	12	2"
5	5	LIGHTING ELECTRICAL BLDG	L	0.4			3.3	1	20	12	12		
7	7	RECEPTACLES ELECTRICAL BLDG	R	0.4	3.3			1	20	12	12		
9	9	EXHAUST FAN EF-1 DRAIN PUMP STAITON	E	0.6		5.0		1	20	12	12	12	2"
11	11	SPARE						1	20				
13	13	SPARE						1	20				
15	15	SPARE						1	20				
17	17	SPARE						1	20				
19	19	SPARE						1	20				
21	21	SPARE						1	20				
23	23	SPARE						1	20				
2	2	DRAIN PUMP STATION LEVEL INSTRUMENT						1	20	12	12	12	3/4"
4	4	DRAIN PUMP STATION MAG METER						1	20	12	12		
8	6	UNIT HEATER	M	7.5			20.8	3	30	10	-	10	1"
	8				20.8					10			
	10					20.8				10			
12	12	SCADA CABINET	U	1.0			8.3	1	20	12	12	12	3/4"
14	14	SPARE						1	20				
16	16	SPARE						1	20				
18	18	SPARE						1	20				
20	20	SPARE						1	20				
22	22	SPARE						1	20				
24	24	SPARE						1	20				
		TOTALS		11.3	32.5	29.2	32.5						

EXIST PANEL "HV3" SCHEDULE

PANELBOARD CHARACTERISTICS:
VOLTS: 480/277
PHASES: 3
WIRES: 4
SOLID NEUTRAL, GROUND BAR

PHASE TO PHASE VOLTS: 480
PHASE TO NEUT. VOLTS: 277

225 AMP MAIN CIRCUIT BREAKER
MINIMUM SHORT CIRCUIT RATING: 22,000 RMS SYM AMPS
EXISTING SIEMENS TYPE PRLX PANEL

CKT. NO.	POLE NO.	DESCRIPTION	LOAD TYPE	CONN. KVA	CONN. AMPS A	CONN. AMPS B	CONN. AMPS C	BREAKER P	BREAKER AT	NO. & WIRE SIZE PHASE	NO. & WIRE SIZE NEUT.	NO. & WIRE SIZE GND	COND. SIZE
	1				20.1					EXISTING			
3	3	GRIT SLURRY PUMP #1	E	16.7		20.1		3	40	EXISTING			
	5						20.1			EXISTING			
	7				20.1					EXISTING			
9	9	GRIT SLURRY PUMP #2	E	16.7		20.1		3	40	EXISTING			
	11						20.1			EXISTING			
	13				7.3					EXISTING			
15	15	SCREEN COLLECTOR SCREW	E	6.1		7.3		3	20	EXISTING			
	17						7.3			EXISTING			
	19				1.7					EXISTING			
21	21	6-MGD BAR SCREEN BRUSH	E	1.4		1.7		3	15	EXISTING			
	23						1.7			EXISTING			
	25				1.3					EXISTING			
27	27	6-MGD BAR SCREEN BRUSH	E	1.1		1.3		3	15	EXISTING			
	29						1.3			EXISTING			
	31				1.7					EXISTING			
33	33	12-MGD BAR SCREEN BRUSH	E	1.4		1.7		3	15	EXISTING			
	35						1.7			EXISTING			
	37				1.3					EXISTING			
39	39	12-MGD BAR SCREEN BRUSH	E	1.1		1.3		3	15	EXISTING			
	41						1.3			EXISTING			
	2				1.3					EXISTING			
4	4	GRIT CLASS/DEWATERING SCREW	E	1.1		1.3		3	15	EXISTING			
	6						1.3			EXISTING			
	8				1.0					EXISTING			
10	10	GRIT CHAMBER MIXER	E	0.8		1.0		3	15	EXISTING			
	12						1.0			EXISTING			
	14				20.4					3			
16	16	MECHANICAL SCREEN CONTROL PANEL	E	17		20.4		3	60	3	3	8	2"
	18						20.4			3			
	20												
22	22							3					
	24												
	26												
28	28							3					
	30												
	32												
34	34							3					
	36												
	38												
40	40							3					
	42												
		TOTALS		63.4	76.3	76.3	76.3						

EXIST PANEL "LV3" SCHEDULE

PANELBOARD CHARACTERISTICS:
VOLTS: 208/120
PHASES: 3
WIRES: 4
SOLID NEUTRAL, GROUND BAR

PHASE TO PHASE VOLTS: 208
PHASE TO NEUT. VOLTS: 120

100 AMP MAIN CIRCUIT BREAKER
MINIMUM SHORT CIRCUIT RATING: 10,000 RMS SYM AMPS
EXIST SIEMENS TYPE PRLIX

CKT. NO.	POLE NO.	DESCRIPTION	LOAD TYPE	CONN. KVA	CONN. AMPS A	CONN. AMPS B	CONN. AMPS C	BREAKER P	BREAKER AT	NO. & WIRE SIZE PHASE	NO. & WIRE SIZE NEUT.	NO. & WIRE SIZE GND	COND. SIZE
1	1	EXISTING LOADS						1	20	EXISTING			
3	3	EXISTING LOADS						1	20	EXISTING			
5	5	EXISTING LOADS						1	20	EXISTING			
7	7	EXISTING LOADS						1	20	EXISTING			
9	9	EXISTING LOADS						1	20	EXISTING			
11	11	EXISTING LOADS						1	20	EXISTING			
13	13	EXISTING LOADS						1	20	EXISTING			
15	15	EXISTING LOADS						1	20	EXISTING			
17	17	EXISTING LOADS						1	20	EXISTING			
19	19												
21	21												
23	23												
25	25												
27	27												
29	29												
31	31												
33	33												
35	35												
37	37												
39	39												
41	41												
2	2	EXISTING LOADS						1	20	EXISTING			
4	4	EXISTING LOADS						1	20	EXISTING			
6	6	EXISTING LOADS						1	20	EXISTING			
8	8	EXISTING LOADS						1	20	EXISTING			
10	10	EXISTING LOADS						1	20	EXISTING			
12	12	EXISTING LOADS						1	20	EXISTING			
14	14	EXISTING LOADS						1	20	EXISTING			
16	16	SITE LIGHTING POLE @ PARSHALL FLUME	L	0.3		2.5		1	20	8	8	10	2"
18	18	PARSHALL FLUME LEVEL INSTRUMENT	E	0.1			0.8	1	20	12	12		
20	20	TANK LEVEL INSTRUMENT	E	0.2	1.7			1	20	12	12	12	3/4"
22	22	HEAT TRACING	E	0.5		4.2		1	20	12	12	12	3/4"
24	24	HEAT TRACING	E	0.5			4.2	1	20	12	12		
26	26	HEAT TRACING SCREEN ENCLOSURE	E	1.2	10.0			1	20	12	12	12	3/4"
28	28	HEAT TRACING SCREEN ENCLOSURE	E	1.2		10.0		1	20	12	12		
30	30	EXISTING LOADS						1	20	EXISTING			
32	32	EXISTING LOADS						1	20	EXISTING			
34	34	EXISTING LOADS						1	20	EXISTING			
36	36	EXISTING LOADS						1	20	EXISTING			
38	38	EXISTING LOADS						1	20	EXISTING			
40	40	EXISTING LOADS						1	20	EXISTING			
42	42	EXISTING LOADS						1	20	EXISTING			
		TOTALS		4	11.7	16.7	5.0						

UNDERGROUND MANHOLE SCHEDULE

HANDHOLE ID	DIMENSIONS	CONSTRUCTION RATING	COVER LABEL
EMHA	96" X 96" X 72"D	AASHTO H20	ELECTRICAL
EMHB	96" X 96" X 72"D	AASHTO H20	ELECTRICAL
EMHC	96" X 96" X 72"D	AASHTO H20	ELECTRICAL
EMHD	96" X 96" X 72"D	AASHTO H20	ELECTRICAL
EMHE	96" X 96" X 72"D	AASHTO H20	ELECTRICAL
EMHF	96" X 96" X 72"D	AASHTO H20	ELECTRICAL

NOTE: SEE DETAIL C ON DRAWING E-16.

UNDERGROUND PULLBOX SCHEDULE

PULL BOX ID	DIMENSIONS	CONSTRUCTION RATING	COVER LABEL
PBA	48" X 48" X 48"D	AASHTO H20	ELECTRICAL

NOTE:

NO.	SHEET REVISION	BY	DATE	NO.	SHEET REVISION	BY	DATE

COMMONWEALTH OF VIRGINIA
JASON A. CLARK
Lic. No. 33605
4/29/2022
PROFESSIONAL ENGINEER

WWA ASSOCIATES
ENGINEERS SURVEYORS PLANNERS
PO Box 4119 Lynchburg, VA 24502 Phone: 434.316.6080
968 Olympia Drive, Suite 1 Charlottesville, VA 22911 Phone: 434.984.2700
www.wwassociates.net

DESIGNED BY: WKH
DRAWN BY: STAFF
DIHR BY: HFW
WWA NUMBER: 221028.00

PROJECT: WASTEWATER TREATMENT PLANT IMPROVEMENTS TOWN OF CULPEPER, VIRGINIA
TITLE: SCHEDULES
FILE NAME:
DISCIPLINE: ELECTRICAL
SCALE: H: N/A V: N/A
SET REV. NO. –
DRAWING NUMBER: E-17
DATE: 4/29/22

NEMA 12 ENCLOSURE
PROVIDE PROVISIONS FOR EXPANSION IN THE FUTURE

MOTOR CONTROL CENTER "MCC11"
DIGESTERS 1 & 2 BLDG #11

MCC RATING: 48O VOLTS, 3 PHASE, 4 WIRE MINIMUM BUS BRACING & OVERCURRENT DEVICE
INTERRUPTING RATING: 65,000 SYM RMS AMPS
BUS RATINGS: 1600 AMP MAIN BUS, 100% NEUTRAL BUS, 100% GROUND BUS, SERVICE ENTRANCE RATED

SPACE CIRCUIT NO.	LOAD DESCRIPTION	CONNECTED			STARTER		OVERCURRENT PROTECTION				BRANCH CIRCUIT					REMARKS
											CONDUCTORS					
		LOAD HP	LOAD KVA	FLA	NEMA SIZE	TYPE	TYPE	MCP RATING (AMPS)	MCCB FRAME (AMPS	TRIP SETTING (AMPS)	PHASE	NEUTRAL	CONTROL	EGC	CONDUIT SIZE	
A1	DIGESTERS 1, 2, 3 BLOWERS CONTROL PANEL	300.0	286.0	360.0	-	-	SS	-	1,000	600	2-350K	2-350K	-	2 #1	2-3 1/2'	
A2	MAIN LUGS ONLY															
B1	PANEL "HV11"		51.0		-	-	SS	-	250	200	3/0	3/0	-	6	2"	
B2	SPARE				-	2	SS	-	250	200						
B3	PANEL "HV12"		154.0	185.0	-	-	SS	-	400	400	500K	500K	-	2	4"	
B3	SPARE				-	1	SS	-	250	200						
B4	SPARE				-	1	SS	-	100	100						
B5	SPACE				-	-										
C1	CENTRIFUGE #2 CONTROL PANEL	60.0	61.3	69.0	-	-			250	175	4/0	4/0	-	4	3"	
C2	POLYMER FEED PUMP #1	0.5	0.8	1.0	1	FVNR			100	15	12	12	-	12	3/4"	
C3	POLYMER FEED PUMP #2	0.5	0.8	1.0	1	FVNR			100	15	12	12	-	12	3/4"	
C4	POLYMER MIXER #1	0.5	0.8	1.0	1	FVNR			100	15	12	12	-	12	3/4"	
C5	POLYMER MIXER #2	0.5	0.8	1.0	1	FVNR			100	15	12	12	-	12	3/4"	
C6	SPARE				2	SS										
D1	EXIST CENTRIFUGE CONTROL PANEL	60.0	61.3	69.0	-	-			250	175	4/0	4/0	-	4	3"	
D2	PRIMARY WASTE SLUDGE PUMP #1	10.0	11.2	14.0	-	-			150	40	10	-	-	10	1"	REMOTE VFD
D3	PRIMARY WASTE SLUDGE PUMP #2	10.0	11.2	14.0	-	-			150	40	10	-	-	10	1"	REMOTE VFD
D4	PRIMARY WASTE SLUDGE PUMP #3	10.0	11.2	14.0	-	-			150	40	10	-	-	10	1"	REMOTE VFD
D5	SPACE															
D6	SPACE															
E1	WASTE SEPTAGE PUMP #1	15.0	16.7	21.0	-	-			150	40	8	-	-	10	1"	REMOTE VFD
E2	WASTE SEPTAGE PUMP #2	15.0	16.7	21.0	-	-			150	40	8	-	-	10	1"	REMOTE VFD
E3	CENTRIFUGE FEED PUMP #1	10.0	11.2	14.0	-	-			150	40	10	-	-	10	1"	REMOTE VFD
E4	CENTRIFUGE FEED PUMP #2	10.0	11.2	14.0	-	-			150	40	10	-	-	10	1"	REMOTE VFD
E5	SPARE				2	FVNR			150	40						WITH HOA
E6	SPARE				1	FVNR			150	30						WITH HOA

PANEL "HV11" SCHEDULE

PANELBOARD CHARACTERISTICS:
VOLTS: 480/277
PHASES: 3
WIRES: 4
SOLID NEUTRAL, GROUND BAR

PHASE TO PHASE VOLTS: 480
PHASE TO NEUT. VOLTS: 277

225 AMP MAIN LUGS ONLY
MINIMUM SHORT CIRCUIT RATING: 42,000 RMS SYM AMPS
WITH DOOR-IN-DOOR ENCLOSURE

CKT. NO.	POLE NO.	DESCRIPTION	LOAD TYPE	CONN. KVA	CONN. AMPS A	CONN. AMPS B	CONN. AMPS C	BREAKER P	BREAKER AT	NO. & WIRE SIZE PHASE	NO. & WIRE SIZE NEUT.	NO. & WIRE SIZE GND	COND. SIZE
	1												
3	3	UNIT HEATER						3					
	5												
	7				1.2					12	12		
9	9	AEROBIC DIGESTER 8" VALVE	E	1.0		1.2		3	20	12	12		
	11						1.2			12	12	12	2"
	13				1.2					12	12		
15	15	AEROBIC DIGESTER 8" VALVE	E	1.0		1.2		3	20	12	12		
	17						1.2			12	12		
	19				1.2					12	12		
21	21	AEROBIC DIGESTER 8" VALVE	E	1.0		1.2		3	20	12	12		
	23						1.2			12	12	12	2"
	25				1.2					12	12		
27	27	AEROBIC DIGESTER 8" VALVE	E	1.0		1.2		3	20	12	12		
	29						1.2			12	12		
	31				1.2					12	12		
33	33	TWAS VALVE	E	1.0		1.2		3	20	12	12		
	35						1.2			12	12	12	2"
	37				1.2					12	12		
39	39	TWAS VALVE	E	1.0		1.2		3	20	12	12		
	41						1.2			12	12		
	2				54.1					4			
4	4	TRANSFORMER "TR11"	E	45.0		54.1		3	70	4	-	8	1 1/2"
	6						54.1			4			
	8												
10	10	SPARE						3	20				
	12												
	14												
16	16	SPARE						3	20				
	18												
	20												
22	22	SPARE						3	30				
	24												
	26												
28	28	SPARE						3	30				
	30												
	32												
34	34	SPARE						3	15				
	36												
	38												
40	40	SPARE						3	15				
	42												
		TOTALS		51	61.3	61.3	61.3						

LOCATED IN ROOM: BNR BLOWER BLDG

FRONT ONLY MAINTENANCE ACCESS

EXIST BNR BLOWER BLDG SWITCHBOARD
"SWBD-BB" SCHEDULE

SWBD RATING: 48O VOLTS, 3 PHASE, 4 WIRE
MINIMUM BUS BRACING & OVERCURRENT DEVICE
INTERRUPTING RATING: 65,000 SYM RMS AMPS
BUS RATINGS: 3000 AMP MAIN BUS, 3000 AMP NEUTRAL BUS, 3000 AMP GROUND BUS

SPACE CIRCUIT NO.	LOAD DESCRIPTION	ESTIMATED KVA	ESTIMATED CONN AMPERES			POLE	OVERCURRENT DEVICE RATING		OVERCURRENT DEVICE SETTING					DEVICE MOUNTING	FEEDER CIRCUIT			
									PHASE			GROUND FAULT						
			ØA	ØB	ØC		FRAME	SENSOR	LONG TIME	SHORT TIME	INSTANT	PICKUP	TIME		PHASE	NEUTRAL	EGC	CONDUIT
1	E MCC-ST			210		3		300										
2	E MCC-EQPS			210		3		300										
3	E MCCBB			210		3		300										
4	E SPARE					3		800										
5	E MCC-RAS			210		3		300										
6	E PROCESS BLOWER NO. 1			180		3		225										
7	E PROCESS BLOWER NO. 3	ONLY 2 REQUIRED TO RUN				3		225										
A8	NEW CIRCUIT BREAKER IN EXIST SPACE FOR PANEL "HVAD"	175	263	263	263	3	800	600	FACTORY SETTING					EXIST SPACE	(2) 400K	(2) 400K	(2)1/0	(2) 4"
M1	E MAIN FROM UTILITY					3	3,000	1,200										
TIE	E TIE BREAKER					3	3,000	1,200										
M2	E MAIN FROM 1,000KW GEN SET					3	3,000	1,200										
1	E MCC-RAS					3		300										
2	E SWBD IPS			560		3		800										
3	E MCC-BB					3		300										
4	E MCC-EQPS					3		300										
5	E MCC-ST					3		300										
6	E PROCESS BLOWER NO. 2			160		3		225										
7	E SPACE																	
8	E SPACE																	

PANEL "LV11" SCHEDULE

PANELBOARD CHARACTERISTICS:
VOLTS: 208/120
PHASES: 3
WIRES: 4
SOLID NEUTRAL, GROUND BAR

PHASE TO PHASE VOLTS: 208
PHASE TO NEUT. VOLTS: 120

150 AMP MAIN CIRCUIT BREAKER
MINIMUM SHORT CIRCUIT RATING: 10,000 RMS SYM AMPS
WITH DOOR-IN-DOOR ENCLOSURE

CKT. NO.	POLE NO.	DESCRIPTION	LOAD TYPE	CONN. KVA	CONN. AMPS A	CONN. AMPS B	CONN. AMPS C	BREAKER P	BREAKER AT	NO. & WIRE SIZE PHASE	NO. & WIRE SIZE NEUT.	NO. & WIRE SIZE GND	COND. SIZE
1	1	LIGHTING	L	1.0	8.3			1	20	12	12		
3	3	LIGHTING	L	1.0		8.3		1	20	12	12	12	3/4"
5	5	RECEPTACLES	R	0.6			5.0	1	20	12	12		
7	7	RECEPTACLES	R	0.6	5.0			1	20	12	12		
9	9	RECEPTACLES	R	0.6		5.0		1	20	12	12	12	3/4"
11	11	EXTERIOR LIGHITNG	L	0.2			1.7	1	20	12	12		
13	13	SCADA PANEL	E	1.0	8.3			1	20	12	12	12	3/4"
15	15	AEROBIC DIGESTER VALVE VAULT LTG & RCPT	E	1.0		8.3		1	20	8	8	10	1"
17	17	SPARE						1	20				
19	19	SPARE						1	20				
21	21	SPARE						1	20				
23	23	SPARE						1	20				
25	25	SPARE						1	20				
27	27	SPARE						1	20				
29	29	SPARE						1	20				
31	31	SPARE						1	20				
33	33	SPARE						1	20				
35	35	SPARE						1	20				
37	37	SPARE						1	20				
39	39	SPARE						1	20				
41	41	SPARE						1	20				
2	2	GENERATOR PANELBOARD	E	5.0	24.0			2	60	4	4	8	2"
	4					24.0				4			
6	6	EXHAUST FAN AND LOUVER	E	1.0			8.3	1	20	12	12	12	3/4"
8	8	MINI SPLIT HVAC UNIT	M	2.2	10.6			2	15	12	12	12	3/4"
	10					10.6				12			
12	12	SPARE						1	20				
14	14	SPARE						1	20				
16	16	SPARE						1	20				
18	18	SPARE						1	20				
20	20	SPARE						1	20				
22	22	SPARE						1	20				
24	24	SPARE						1	20				
26	26	SPARE						1	20				
28	28	SPARE						1	20				
30	30	SPARE						1	20				
32	32	SPARE						1	20				
34	34	SPARE						1	20				
36	36	SPARE						1	20				
38	38	SPARE						1	20				
40	40	SPARE						1	20				
42	42	SPARE						1	20				
		TOTALS		14.2	56.3	56.3	15.0						

NO.	SHEET REVISION	BY	DATE	NO.	SHEET REVISION	BY	DATE

COMMONWEALTH OF VIRGINIA
JASON A. CLARK
Lic. No. 33605
4/29/2022
PROFESSIONAL ENGINEER

WWA ASSOCIATES
ENGINEERS SURVEYORS PLANNERS
PO Box 4119 Lynchburg, VA 24502 Phone: 434.316.6080
968 Olympia Drive, Suite 1 Charlottesville, VA 22911 Phone: 434.984.2700
www.wwassociates.net

DESIGNED BY: WKH
DRAWN BY: STAFF
DIHR BY: HFW
WWA NUMBER: 221028.00

PROJECT: WASTEWATER TREATMENT PLANT IMPROVEMENTS TOWN OF CULPEPER, VIRGINIA
TITLE: SCHEDULES
FILE NAME:
DISCIPLINE: ELECTRICAL
SCALE: H: N/A V: N/A
SET REV. NO. –
DRAWING NUMBER: E-18
DATE: 4/29/22

PANEL "HV12" SCHEDULE

PANELBOARD CHARACTERISTICS:
VOLTS: 480/277
PHASES: 3
WIRES: 4
SOLID NEUTRAL, GROUND BAR

PHASE TO PHASE VOLTS: 480
PHASE TO NEUT. VOLTS: 277
400 AMP MAIN CIRCUIT BREAKER
MINIMUM SHORT CIRCUIT RATING: 42,000 RMS SYM AMPS
NEMA 4X ENCLOSURE

CKT. NO.	POLE NO.	DESCRIPTION	LOAD TYPE	CONN. KVA	CONN. AMPS A	CONN. AMPS B	CONN. AMPS C	BREAKER P	BREAKER AT	NO. & WIRE SIZE PHASE	NO. & WIRE SIZE NEUT.	NO. & WIRE SIZE GND	COND. SIZE
	1				1.2					12			
3	3	MOTORIZED VALVE	E	1.0		1.2		3	20	12	-	12	3/4"
	5						1.2			12			
	7				1.2					12			
9	9	MOTORIZED VALVE	E	1.0		1.2		3	20	12	-	12	3/4"
	11						1.2			12			
	13				1.2					12			
15	15	MOTORIZED VALVE	E	1.0		1.2		3	20	12	-	12	3/4"
	17						1.2			12			
	19				1.2					12			
21	21	MOTORIZED VALVE	E	1.0		1.2		3	20	12	-	12	3/4"
	23						1.2			12			
	25												
27	27	SPARE						3	20				
	29												
	31												
33	33	SPARE						3	20				
	35												
	37												
39	39	SPARE						3	30				
	41												
	2				54.1					4			
4	4	TRANSFORMER "TR12"	E	45.0		54.1		3	70	4	-	8	1 1/2"
	6						54.1			4			
	8				36.1					1			
10	10	PANEL "P6A"	E	30		36.1		3	100	1	1	6	2"
	12						36.1			1			
	14				90.2					1			
16	16	TRANSFORMER "TR6A (BLDG 12)"	E	75		90.2		3	110	1	-	6	2"
	18						90.2			1			
	20												
22	22	SPACE						3					
	24												
	26												
28	28	SPACE						3					
	30												
	32												
34	34	SPACE						3					
	36												
	38												
40	40	SPACE						3					
	42												
		TOTALS		154	185.2	185.2	185.2						

PANEL "PA6" SCHEDULE

PANELBOARD CHARACTERISTICS:
VOLTS: 480/277
PHASES: 3
WIRES: 4
SOLID NEUTRAL, GROUND BAR

PHASE TO PHASE VOLTS: 480
PHASE TO NEUT. VOLTS: 277
225 AMP MAIN CIRCUIT BREAKER
MINIMUM SHORT CIRCUIT RATING: 32,000 RMS SYM AMPS
WITH DOOR-IN-DOOR ENCLOSURE

CKT. NO.	POLE NO.	DESCRIPTION	LOAD TYPE	CONN. KVA	CONN. AMPS A	CONN. AMPS B	CONN. AMPS C	BREAKER P	BREAKER AT	NO. & WIRE SIZE PHASE	NO. & WIRE SIZE NEUT.	NO. & WIRE SIZE GND	COND. SIZE	NOTES
1	1	LIGHTING						1	20	RECONNECT EXISTING				
3	3	LIGHTING						1	20	RECONNECT EXISTING				
5	5	LIGHTING						1	20	RECONNECT EXISTING				
7	7	EMERGENCY POWER PACK						1	20	RECONNECT EXISTING				
9	9	LIGHTING						1	20	RECONNECT EXISTING				
11	11	LIGHTING						1	20	RECONNECT EXISTING				
13	13	LIGHTING						1	20	RECONNECT EXISTING				
15	15	SPARE						1	20	RECONNECT EXISTING				
17	17	SPARE						1	20	RECONNECT EXISTING				
19	19	WELDING RECEPTACLE						2	60	RECONNECT EXISTING				
	21									RECONNECT EXISTING				
	23						1.0			12				
25	25	FAN 7		0.8	1.0			3	15	12	-	12	3/4"	1, 2
	27					1.0				12				
	29						1.0			12				
31	31	FAN 2		0.8	1.0			3	15	12	-	12	3/4"	1, 2
	33					1.0				12				
	35						1.3			12				
37	37	FAN 3		1.1	1.3			3	15	12	-	12	3/4"	1, 2
	39					1.3				12				
41	41	SPACE												
	2				1.3					12				
4	4	AHU 1		1.1		1.3		3	15	12	-	12	3/4"	1, 2
	6						1.3			12				
	8				26.1					8				
10	10	AIR COMPRESSOR		21.7		26.1		3	40	8	-	10	1"	1
	12						26.1			8				
	14				26.1					8				
16	16	AIR COMPRESSOR		21.7		26.1		3	40	8	-	10	1"	1
	18						26.1			8				
	20				6.0					12				
22	22	ROLL UP DOOR		5		6.0		3	20	12	-	12	3/4"	1
	24						6.0			12				
	26				6.0					12				
28	28	ROLL UP DOOR		5		6.0		3	20	12	-	12	3/4"	1
	30						6.0			12				
	32				10.8					8				
34	34	SEPTIC RECEIVING STATION CONTROL PNL	E	9		10.8		3	30	8	8	10	2"	3
	36						10.8			8				
	38				1.2					10				
40	40	INFLUENT PLUG VALVE ACTUATOR	E	1.0		1.2		3	20	10	10	10	1"	3
	42						1.2			10				
		TOTALS		67.2	80.8	80.8	80.8							TOTALS

NOTES
1. EXISTING LOADS SHALL BE REFED 2. PROVIDE COMBINATION STARTERS FOR FANS AND AHU LOCAL TO UNITS. 3. NEW LOADS

PANEL "L6A" SCHEDULE

PANELBOARD CHARACTERISTICS:
VOLTS: 208/120
PHASES: 3
WIRES: 4
SOLID NEUTRAL, GROUND BAR

PHASE TO PHASE VOLTS: 208
PHASE TO NEUT. VOLTS: 120
WITH FEED THRU LUGS
250 AMP MAIN CIRCUIT BREAKER
MINIMUM SHORT CIRCUIT RATING: 14,000 RMS SYM AMPS
WITH DOOR-IN-DOOR ENCLOSURE

CKT. NO.	POLE NO.	DESCRIPTION	LOAD TYPE	CONN. KVA	CONN. AMPS A	CONN. AMPS B	CONN. AMPS C	BREAKER P	BREAKER AT	NO. & WIRE SIZE PHASE	NO. & WIRE SIZE NEUT.	NO. & WIRE SIZE GND	COND. SIZE
1	1	LABEL FOR EXISTING CIRCUIT						1	20	RECONNECT EXIST CONDUCTORS			
3	3	LABEL FOR EXISTING CIRCUIT						1	20	RECONNECT EXIST CONDUCTORS			
5	5	LABEL FOR EXISTING CIRCUIT						1	20	RECONNECT EXIST CONDUCTORS			
7	7	LABEL FOR EXISTING CIRCUIT						1	20	RECONNECT EXIST CONDUCTORS			
9	9	LABEL FOR EXISTING CIRCUIT						1	20	RECONNECT EXIST CONDUCTORS			
11	11	LABEL FOR EXISTING CIRCUIT						1	20	RECONNECT EXIST CONDUCTORS			
13	13	LABEL FOR EXISTING CIRCUIT						1	20	RECONNECT EXIST CONDUCTORS			
15	15	LABEL FOR EXISTING CIRCUIT						1	20	RECONNECT EXIST CONDUCTORS			
17	17	LABEL FOR EXISTING CIRCUIT						1	20	RECONNECT EXIST CONDUCTORS			
19	19	LABEL FOR EXISTING CIRCUIT						1		RECONNECT EXIST CONDUCTORS			
21	21	LABEL FOR EXISTING CIRCUIT						1		RECONNECT EXIST CONDUCTORS			
23	23	LABEL FOR EXISTING CIRCUIT						1		RECONNECT EXIST CONDUCTORS			
25	25	LABEL FOR EXISTING CIRCUIT						2	30	RECONNECT EXIST CONDUCTORS			
	27	LABEL FOR EXISTING CIRCUIT								RECONNECT EXIST CONDUCTORS			
29	29	LABEL FOR EXISTING CIRCUIT						1	20	RECONNECT EXIST CONDUCTORS			
	31	LABEL FOR EXISTING CIRCUIT						2	30	RECONNECT EXIST CONDUCTORS			
33	33	LABEL FOR EXISTING CIRCUIT								RECONNECT EXIST CONDUCTORS			
35	35	LABEL FOR EXISTING CIRCUIT						1	20	RECONNECT EXIST CONDUCTORS			
37	37	LABEL FOR EXISTING CIRCUIT						1	20	RECONNECT EXIST CONDUCTORS			
39	39	SPACE,UTILIZE TO FEED SEPTAGE INSTRU						1	20	10	10	12	1"
41	41	SPACE,UTILIZE TO FEED SEPTAGE INSTRU						1	20	10	10		
2	2	LABEL FOR EXISTING CIRCUIT						1	20	RECONNECT EXIST CONDUCTORS			
4	4	LABEL FOR EXISTING CIRCUIT						1	20	RECONNECT EXIST CONDUCTORS			
6	6	LABEL FOR EXISTING CIRCUIT						1	20	RECONNECT EXIST CONDUCTORS			
8	8	LABEL FOR EXISTING CIRCUIT						1	20	RECONNECT EXIST CONDUCTORS			
	10	LABEL FOR EXISTING CIRCUIT								RECONNECT EXIST CONDUCTORS			
12	12	LABEL FOR EXISTING CIRCUIT						3	15	RECONNECT EXIST CONDUCTORS			
	14	LABEL FOR EXISTING CIRCUIT								RECONNECT EXIST CONDUCTORS			
16	16	LABEL FOR EXISTING CIRCUIT						2	30	RECONNECT EXIST CONDUCTORS			
	18	LABEL FOR EXISTING CIRCUIT								RECONNECT EXIST CONDUCTORS			
	20	LABEL FOR EXISTING CIRCUIT								RECONNECT EXIST CONDUCTORS			
22	22	LABEL FOR EXISTING CIRCUIT						3	15	RECONNECT EXIST CONDUCTORS			
	24	LABEL FOR EXISTING CIRCUIT								RECONNECT EXIST CONDUCTORS			
26	26	LABEL FOR EXISTING CIRCUIT						2	15	RECONNECT EXIST CONDUCTORS			
	28	LABEL FOR EXISTING CIRCUIT								RECONNECT EXIST CONDUCTORS			
30	30	LABEL FOR EXISTING CIRCUIT						1	20	RECONNECT EXIST CONDUCTORS			
32	32	LABEL FOR EXISTING CIRCUIT						1	20	RECONNECT EXIST CONDUCTORS			
34	34	LABEL FOR EXISTING CIRCUIT						1	20	RECONNECT EXIST CONDUCTORS			
36	36	LABEL FOR EXISTING CIRCUIT						1	20	RECONNECT EXIST CONDUCTORS			
38	38	LABEL FOR EXISTING CIRCUIT						1	20	RECONNECT EXIST CONDUCTORS			
40	40	LABEL FOR EXISTING CIRCUIT						1	20	RECONNECT EXIST CONDUCTORS			
42	42	SPACE,UTILIZE TO FEED SEPTAGE INSTRU						1	20	10	10	12	1"
		TOTALS											

PANEL "LV12" SCHEDULE

PANELBOARD CHARACTERISTICS:
VOLTS: 208/120
PHASES: 3
WIRES: 4
SOLID NEUTRAL, GROUND BAR

PHASE TO PHASE VOLTS: 208
PHASE TO NEUT. VOLTS: 120
150 AMP MAIN CIRCUIT BREAKER
MINIMUM SHORT CIRCUIT RATING: 14,000 RMS SYM AMPS
NEMA 4X ENCLOSURE

CKT. NO.	POLE NO.	DESCRIPTION	LOAD TYPE	CONN. KVA	CONN. AMPS A	CONN. AMPS B	CONN. AMPS C	BREAKER P	BREAKER AT	NO. & WIRE SIZE PHASE	NO. & WIRE SIZE NEUT.	NO. & WIRE SIZE GND	COND. SIZE
1	1	FLOW METER	E	0.2	1.7			1	20	12	12		
3	3	FLOW METER	E	0.2		1.7		1	20	12	12	12	3/4"
5	5	FLOW METER	E	0.2			1.7	1	20	12	12		
7	7	FLOW METER	E	0.2	1.7			1	20	12	12		
9	9	FLOW METER	E	0.2		1.7		1	20	12	12	12	3/4"
11	11	FLOW METER	E	0.2			1.7	1	20	12	12		
13	13	SPARE						1	20				
15	15	SPARE						1	20				
17	17	SPARE						1	20				
19	19	SPARE						1	20				
21	21	SPARE						1	20				
23	23	SPARE						1	20				
25	25	SPARE						1	20				
27	27	SPARE						1	20				
29	29	SPARE						1	20				
2	2	SPARE						1	20				
4	4	SPARE						1	20				
6	6	SPARE						1	20				
8	8	SPARE						1	20				
10	10	SPARE						1	20				
12	12	SPARE						1	20				
14	14	SPARE						1	20				
16	16	SPARE						1	20				
18	18	SPARE						1	20				
20	20	SPARE						1	20				
22	22	SPARE						1	20				
24	24	SPARE						1	20				
26	26	SPARE						1	20				
28	28	SPARE						1	20				
30	30	SPARE						1	20				
		TOTALS		1.2	3.3	3.3	3.3						

PANEL "L6B" SCHEDULE

PANELBOARD CHARACTERISTICS:
VOLTS: 208/120
PHASES: 3
WIRES: 4
SOLID NEUTRAL, GROUND BAR

PHASE TO PHASE VOLTS: 208
PHASE TO NEUT. VOLTS: 120
250 AMP MAIN LUGS ONLY
MINIMUM SHORT CIRCUIT RATING: 14,000 RMS SYM AMPS
WITH DOOR-IN-DOOR ENCLOSURE

CKT. NO.	POLE NO.	DESCRIPTION	LOAD TYPE	CONN. KVA	CONN. AMPS A	CONN. AMPS B	CONN. AMPS C	BREAKER P	BREAKER AT	NO. & WIRE SIZE PHASE	NO. & WIRE SIZE NEUT.	NO. & WIRE SIZE GND	COND. SIZE
1	1	LABEL FOR EXISTING CIRCUIIT						1	20	RECONNECT EXIST CONDUCTORS			
3	3	LABEL FOR EXISTING CIRCUIIT						1	20	RECONNECT EXIST CONDUCTORS			
5	5	LABEL FOR EXISTING CIRCUIIT						1	20	RECONNECT EXIST CONDUCTORS			
7	7	SPACE						1					
9	9	LABEL FOR EXISTING CIRCUIIT						1	20	RECONNECT EXIST CONDUCTORS			
11	11	LABEL FOR EXISTING CIRCUIIT						1	20	RECONNECT EXIST CONDUCTORS			
13	13	LABEL FOR EXISTING CIRCUIIT						1	20	RECONNECT EXIST CONDUCTORS			
15	15	LABEL FOR EXISTING CIRCUIIT						1	20	RECONNECT EXIST CONDUCTORS			
17	17	LABEL FOR EXISTING CIRCUIIT						1	20	RECONNECT EXIST CONDUCTORS			
19	19	HEAT TRACING SEPTAGE RECEIVING						1	20	10	10	10	1"
21	21	HEAT TRACING SEPTAGE RECEIVING						1	20	10	10		
23	23	SPACE						1					
25	25	LABEL FOR EXISTING CIRCUIIT						1	20	RECONNECT EXIST CONDUCTORS			
27	27	LABEL FOR EXISTING CIRCUIIT						1	20	RECONNECT EXIST CONDUCTORS			
29	29	LABEL FOR EXISTING CIRCUIIT						1	20	RECONNECT EXIST CONDUCTORS			
31	31	LABEL FOR EXISTING CIRCUIIT						1	20	RECONNECT EXIST CONDUCTORS			
33	33	LABEL FOR EXISTING CIRCUIIT						1	20	RECONNECT EXIST CONDUCTORS			
35	35	LABEL FOR EXISTING CIRCUIIT						1	20	RECONNECT EXIST CONDUCTORS			
37	37	LABEL FOR EXISTING CIRCUIIT						1	20	RECONNECT EXIST CONDUCTORS			
39	39	LABEL FOR EXISTING CIRCUIIT						1	20	RECONNECT EXIST CONDUCTORS			
41	41	LABEL FOR EXISTING CIRCUIIT						1	20	RECONNECT EXIST CONDUCTORS			
2	2	LABEL FOR EXISTING CIRCUIIT						2	30	RECONNECT EXIST CONDUCTORS			
	4									RECONNECT EXIST CONDUCTORS			
6	6	LABEL FOR EXISTING CIRCUIIT						2	30	RECONNECT EXIST CONDUCTORS			
	8									RECONNECT EXIST CONDUCTORS			
10	10	LABEL FOR EXISTING CIRCUIIT						2	30	RECONNECT EXIST CONDUCTORS			
	12									RECONNECT EXIST CONDUCTORS			
14	14	LABEL FOR EXISTING CIRCUIIT						2	30	RECONNECT EXIST CONDUCTORS			
	16									RECONNECT EXIST CONDUCTORS			
18	18	LABEL FOR EXISTING CIRCUIIT						2	30	RECONNECT EXIST CONDUCTORS			
	20									RECONNECT EXIST CONDUCTORS			
22	22	LABEL FOR EXISTING CIRCUIIT						2	30	RECONNECT EXIST CONDUCTORS			
	24									RECONNECT EXIST CONDUCTORS			
	26									RECONNECT EXIST CONDUCTORS			
28	28	LABEL FOR EXISTING CIRCUIIT						3	30	RECONNECT EXIST CONDUCTORS			
	30									RECONNECT EXIST CONDUCTORS			
	32									RECONNECT EXIST CONDUCTORS			
34	34	LABEL FOR EXISTING CIRCUIIT						3	30	RECONNECT EXIST CONDUCTORS			
	36									RECONNECT EXIST CONDUCTORS			
38	38	SPACE						1					
40	40	SPACE						1					
42	42	SPACE						1					
		TOTALS											

NO.	SHEET REVISION	BY	DATE	NO.	SHEET REVISION	BY	DATE

COMMONWEALTH OF VIRGINIA
JASON A. CLARK
Lic. No. 33605
4/29/2022
PROFESSIONAL ENGINEER

WWA ASSOCIATES
ENGINEERS SURVEYORS PLANNERS
PO Box 4119 Lynchburg, VA 24502 Phone: 434.316.6080
968 Olympia Drive, Suite 1 Charlottesville, VA 22911 Phone: 434.984.2700
www.wwassociates.net

DESIGNED BY: WKH
DRAWN BY: STAFF
DIHR BY: HFW
WWA NUMBER: 221028.00

PROJECT: WASTEWATER TREATMENT PLANT IMPROVEMENTS TOWN OF CULPEPER, VIRGINIA
TITLE: SCHEDULES
FILE NAME:
DISCIPLINE: ELECTRICAL
SCALE: H: N/A V: N/A
SET REV. NO. –
DRAWING NUMBER: E–19
DATE: 4/29/22

PANEL "HVAD" SCHEDULE

PANELBOARD CHARACTERISTICS:
VOLTS: 480/277
PHASES: 3
WIRES: 4
SOLID NEUTRAL, GROUND BAR

PHASE TO PHASE VOLTS: 480
PHASE TO NEUT. VOLTS: 277

400 AMP MAIN CIRCUIT BREAKER
MINIMUM SHORT CIRCUIT RATING: 65,000 RMS SYM AMPS
NEMA 4X ENCLOSURE

CKT. NO.	POLE NO.	DESCRIPTION	LOAD TYPE	CONN. KVA	CONN. AMPS A	CONN. AMPS B	CONN. AMPS C	BREAKER P	BREAKER AT	NO. & WIRE SIZE PHASE	NO. & WIRE SIZE NEUT.	NO. & WIRE SIZE GND	COND. SIZE
	1				192.5					350			
3	3	AEROBIC DIGESTER 3 & 4	E	160.0		192.5		3	300	350	350	3	3 1/2"
	5	CONTROL PANEL					192.5			350			
	7												
9	9	SPARE						3					
	11												
	13				1.2					1			
15	15	MOTORIZED VALVES	E	1.0		1.2		3	20	1	-	12	3/4"
	17						1.2			1			
2	2	TRANSFORMER "TRAD"	E	15.0	31.3			2	40	8	-	10	1 1/2"
	4					31.3				8			
6	6	SPARE											
	8				1.2					12			
10	10	MOTORIZED VALVE AD3	E	1		1.2		3	20	12	-	12	3/4"
	12						1.2			12			
	14				1.2					12			
16	16	MOTORIZED VALVE AD4	E	1		1.2		3	20	12	-	12	3/4"
	18						1.2			12			
		TOTALS		178	227.3	227.3	196.1						

PANEL "LVAD" SCHEDULE

PANELBOARD CHARACTERISTICS:
VOLTS: 120/240
PHASES: 1
WIRES: 3
SOLID NEUTRAL, GROUND BAR

PHASE TO PHASE VOLTS: 240
PHASE TO NEUT. VOLTS: 120

60 AMP MAIN CIRCUIT BREAKER
MINIMUM SHORT CIRCUIT RATING: 14,000 RMS SYM AMPS
NEMA 4X ENCLOSURE

CKT. NO.	POLE NO.	DESCRIPTION	LOAD TYPE	CONN. KVA	CONN. AMPS A	CONN. AMPS B	BREAKER P	BREAKER AT	NO. & WIRE SIZE PHASE	NO. & WIRE SIZE NEUT.	NO. & WIRE SIZE GND	COND. SIZE
1	1	SITE LIGHTING					1	20	12	12	12	3/4"
3	3	RECEPTACLE					1	20	12	12		
5	5	SPARE					1	20				
7	7	SPARE					1	20				
9	9	SPARE					1	20				
11	11	SPARE					1	20				
2	2	AEROBIC DIGESTER LEVEL INSTRUMENT	E	0.2	1.7		1	20	12	12	12	3/4"
4	4	SPARE					1	20				
6	6	SPARE					1	20				
8	8	SPARE					1	20				
10	10	SPARE					1	20				
12	12	SPARE					1	20				
		TOTALS		0.2	1.7							

LIGHTING FIXTURE SCHEDULE

SYM	BASIS OF DESIGN MANUFACTURER AND MODEL	VOLTS	VOLT-AMPS	MOUNTING	LAMPS LUMENS	LAMPS TYPE	REMARKS
A	APPLETON PN APMSO50C135HD10, MLLED-A-4-2-N-P5-BU	120	50	PENDANT	5500	LED'S	CLASS 1, DIV 2, GROUPS A, B, C, D, UL LISTED
B	LITHONIA WDGE2 LED P3 40K 80CRI VF MVOLT	120	23	WALL	3200	LED'S	EXTERIOR WALL MOUNTED, NIGHT TIME/DARK SKY RATED
C	LITHONIA FEM L48 8000LM LPPCL MD MVOLT GZ10 40K 80CRI	120	50	SURFACE	7200	LED'S	PROCESS ROOMS, ENCLOSED AND GASKETED
D	LITHONIA CSVT-L48-3000LM-MVOLT-40K-80CRI	120	24	CEILING	3000	LED'S	VALVE VAULTS, VAPOR TIGHT STRIP LIGHT
E	TLS, TLSVXH H12N R D 2 LI	120	5	WALL		LED'S	CLASS 1, DIVISION 2 LED EXIT COMBO UNIT
EMX	LITHONIA LHQM-LED-R-HO	120	0.04	WALL		LED'S	EXIT EGRESS COMBO UNIT
SL1	LITHONIA FIXTURE: DSX1-LED-P7-40K-TFTM-208-SPA-PER-DF-DD BXD-WITH PHOTO CELL LITHONIA POLE: SSS-25-5G-DM19AS-UL-DDBXD-WITH BASE COVER	208	183	POLE MOUNTED	19000	LED'S	SITE LIGHTING, POLE MOUNTED 25'

NOTES:

POWER TRANSFORMER SCHEDULE

DESIGNATION	TYPE	NUMBER PHASES	KVA	MINIMUM IMPEDENCE IN %	VOLTAGE PRIMARY	VOLTAGE SECONDARY	LOAD CIRCUIT DATA (SECONDARY) WIRE NUMBER & SIZE PHASE	NEUTRAL	EGC	CONDUIT NO. & SIZE	REMARKS
TR8	DRY	3	45.0	3.75	480	208/120	#2	#2	#8	2"	FEEDS PANEL "LV8"
TR11	DRY	3	45.0	3.75	480	208/120	#2	#2	#8	2"	FEEDS PANEL "LV11"
TR12	DRY	3	75.0	5.75	480	208/120	300K	300K	#3	2 1/2"	FEEDS PANEL "LV12"
TR6A	DRY	3	75.0	5.75	480	208/120	300K	300K	#3	2 1/2"	FEEDS PANEL "LVA6"
TRAD	DRY	3	15	3.75	480	120/240	#2	#2	#8	2"	FEEDS PANEL "LVAD"

DUCTBANK SCHEDULE

DUCTBANK	DUCT NAME	DUCT SIZE	FILL ORIGIN	FILL DESTINATION	CABLE FILL
DBA	A1	4"	BUILDING #11 STUB UP	GENERATOR	SPARE
	A2	4"	BUILDING #11 STUB UP	GENERATOTR	SPARE
	A3	4"	BUILDING #11 PANEL "LV11"	GENERATOR	GENERATOR PANEL FEEDER
	A4	4"	BUILDING #11 ATS	GENERATOR	EMERGENCY FEED FROM GENERATOR
	A5	4"	BUILDING #11 ATS	GENERATOR	EMERGENCY FEED FROM GENERATOR
	A6	4"	BUILDING #11 ATS	GENERATOR	EMERGENCY FEED FROM GENERATOR
DBB	B1	4"	BUILDING #11 STUB UP	GENERATOR	SPARE
	B2	4"	BUILDING #11 STUB UP	GENERATOTR	SPARE
	B3	4"	BUILDING #11 PANEL "LV11"	GENERATOR	GENERATOR PANEL FEEDER
	B4	4"	BUILDING #11 ATS	GENERATOR	EMERGENCY FEED FROM GENERATOR
	B5	4"	BUILDING #11 ATS	GENERATOR	EMERGENCY FEED FROM GENERATOR
	B6	4"	BUILDING #11 ATS	GENERATOR	EMERGENCY FEED FROM GENERATOR
DBC	C1	4"	BUILDING #11 STUB UP	GENERATOR	SPARE
	C2	4"	BUILDING #11 STUB UP	GENERATOTR	SPARE
	C3	4"	BUILDING #11 PANEL "LV11"	GENERATOR	GENERATOR PANEL FEEDER
	C4	4"	BUILDING #11 ATS	GENERATOR	EMERGENCY FEED FROM GENERATOR
	C5	4"	BUILDING #11 ATS	GENERATOR	EMERGENCY FEED FROM GENERATOR
	C6	4"	BUILDING #11 ATS	GENERATOR	EMERGENCY FEED FROM GENERATOR
DBD	D1	4"	BNR BLOWER SWGR BLDG	AEROBIC DIGESTER BLOWER STATION PANEL "HVAD"	SPARE
	D2	4"	BNR BLOWER SWGR BLDG	AEROBIC DIGESTER BLOWER STATION PANEL "HVAD"	SPARE
	D3	4"	BNR BLOWER SWGR BLDG	AEROBIC DIGESTER BLOWER STATION PANEL "HVAD"	PANEL "HVAD" FEEDER
	D4	4"	BNR BLOWER SWGR BLDG	AEROBIC DIGESTER BLOWER STATION PANEL "HVAD"	PANEL "HVAD" FEEDER
DBE	E1	4"	BNR BLOWER SWGR BLDG	AEROBIC DIGESTER BLOWER STATION PANEL "HVAD"	SPARE
	E2	4"	BNR BLOWER SWGR BLDG	AEROBIC DIGESTER BLOWER STATION PANEL "HVAD"	SPARE
	E3	4"	BNR BLOWER SWGR BLDG	AEROBIC DIGESTER BLOWER STATION PANEL "HVAD"	PANEL "HVAD" FEEDER
	E4	4"	BNR BLOWER SWGR BLDG	AEROBIC DIGESTER BLOWER STATION PANEL "HVAD"	PANEL "HVAD" FEEDER
DBF	F1	4"	BNR BLOWER SWGR BLDG	AEROBIC DIGESTER BLOWER STATION PANEL "HVAD"	SPARE
	F2	4"	BNR BLOWER SWGR BLDG	AEROBIC DIGESTER BLOWER STATION PANEL "HVAD"	SPARE
	F3	4"	BNR BLOWER SWGR BLDG	AEROBIC DIGESTER BLOWER STATION PANEL "HVAD"	PANEL "HVAD" FEEDER
	F4	4"	BNR BLOWER SWGR BLDG	AEROBIC DIGESTER BLOWER STATION PANEL "HVAD"	PANEL "HVAD" FEEDER
DBG	G1	4"	BNR BLOWER SWGR BLDG	AEROBIC DIGESTER BLOWER STATION PANEL "HVAD"	SPARE
	G2	4"	BNR BLOWER SWGR BLDG	AEROBIC DIGESTER BLOWER STATION PANEL "HVAD"	SPARE
	G3	4"	BNR BLOWER SWGR BLDG	AEROBIC DIGESTER BLOWER STATION PANEL "HVAD"	PANEL "HVAD" FEEDER
	G4	4"	BNR BLOWER SWGR BLDG	AEROBIC DIGESTER BLOWER STATION PANEL "HVAD"	PANEL "HVAD" FEEDER
DBH	H1	4"	BNR BLOWER SWGR BLDG	AEROBIC DIGESTER BLOWER STATION PANEL "HVAD"	SPARE
	H2	4"	BNR BLOWER SWGR BLDG	AEROBIC DIGESTER BLOWER STATION PANEL "HVAD"	SPARE
	H3	4"	BNR BLOWER SWGR BLDG	AEROBIC DIGESTER BLOWER STATION PANEL "HVAD"	PANEL "HVAD" FEEDER
	H4	4"	BNR BLOWER SWGR BLDG	AEROBIC DIGESTER BLOWER STATION PANEL "HVAD"	PANEL "HVAD" FEEDER
DBJ	J1	4"	DRAIN PUMP STATION JUNCTION BOX	DRAIN PUMP STATION ELEC BLDG MCC8	SPARE
	J2	4"	DRAIN PUMP STATION JUNCTION BOX	DRAIN PUMP STATION ELEC BLDG MCC8	SPARE
	J3	4"	DRAIN PUMP STATION JUNCTION BOX	DRAIN PUMP STATION ELEC BLDG MCC8	SPARE
	J4	4"	DRAIN PUMP STATION JUNCTION BOX	DRAIN PUMP STATION ELEC BLDG MCC8	MOTOR CONTROL CENTER "MCC8" FEEDER
DBK	K1	4"	DIGESTER CONTROL BLDG JUNCTION BOX	BLDG #12 JUNCTION BOX	SPARE
	K2	4"	DIGESTER CONTROL BLDG JUNCTION BOX	BLDG #12 JUNCTION BOX	SPARE
	K3	4"	DIGESTER CONTROL BLDG JUNCTION BOX	BLDG #12 JUNCTION BOX	SPARE
	K4	4"	DIGESTER CONTROL BLDG JUNCTION BOX	BLDG #12 JUNCTION BOX	SPARE
	K5	4"	DIGESTER CONTROL BLDG JUNCTION BOX	BLDG #12 JUNCTION BOX	DATA CABLES
	K6	4"	DIGESTER CONTROL BLDG JUNCTION BOX	BLDG #12 JUNCTION BOX	DATA CABLES
	K7	4"	DIGESTER CONTROL BLDG JUNCTION BOX	BLDG #12 JUNCTION BOX	DATA CABLES
	K8	4"	DIGESTER CONTROL BLDG JUNCTION BOX	BLDG #12 JUNCTION BOX	480 VOLT FEEDS
	K9	4"	DIGESTER CONTROL BLDG JUNCTION BOX	BLDG #12 JUNCTION BOX	480 VOLT FEEDS
	K10	4"	DIGESTER CONTROL BLDG JUNCTION BOX	BLDG #12 JUNCTION BOX	480 VOLT FEEDS
	K11	4"	DIGESTER CONTROL BLDG JUNCTION BOX	BLDG #12 JUNCTION BOX	480 VOLT FEEDS
	K12	4"	DIGESTER CONTROL BLDG JUNCTION BOX	BLDG #12 JUNCTION BOX	480 VOLT FEEDS
	K13	4"	DIGESTER CONTROL BLDG JUNCTION BOX	BLDG #12 JUNCTION BOX	480 VOLT FEEDS
	K14	4"	DIGESTER CONTROL BLDG JUNCTION BOX	BLDG #12 JUNCTION BOX	480 VOLT FEEDS
	K15	4"	DIGESTER CONTROL BLDG JUNCTION BOX	BLDG #12 JUNCTION BOX	480 VOLT FEEDS
DPS	S	4"	DRAIN PUMP STATION JUNCTION BOX	DRAIN PUMP STATION ELEC BLDG JUNCTION BOX	SPARE
	S	4"	DRAIN PUMP STATION JUNCTION BOX	DRAIN PUMP STATION ELEC BLDG JUCTION BOX	SPARE
	S	4"	DRAIN PUMP STATION JUNCTION BOX	DRAIN PUMP STATION ELEC BLDG JUCTION BOX	SPARE
	S	4"	DRAIN PUMP STATION JUNCTION BOX	DRAIN PUMP STATION ELEC BLDG JUCTION BOX	SPARE
	C	4"	DRAIN PUMP STATION JUNCTION BOX	DRAIN PUMP STATION ELEC BLDG JUCTION BOX	DATA CABLES
	C	4"	DRAIN PUMP STATION JUNCTION BOX	DRAIN PUMP STATION ELEC BLDG JUCTION BOX	DATA CABLES
	L	4"	DRAIN PUMP STATION JUNCTION BOX	DRAIN PUMP STATION ELEC BLDG JUNCTION BOX	120 & 208 VOLT CIRCUITS
	L	4"	DRAIN PUMP STATION JUNCTION BOX	DRAIN PUMP STATION ELEC BLDG JUCTION BOX	120 & 208 VOLT CIRCUITS
	P	4"	DRAIN PUMP STATION JUNCTION BOX	DRAIN PUMP STATION ELEC BLDG JUCTION BOX	480 VOLT CIRCUITS
	P	4"	DRAIN PUMP STATION JUNCTION BOX	DRAIN PUMP STATION ELEC BLDG JUCTION BOX	480 VOLT CIRCUITS
	P	4"	DRAIN PUMP STATION JUNCTION BOX	DRAIN PUMP STATION ELEC BLDG JUCTION BOX	480 VOLT CIRCUITS
	P	4"	DRAIN PUMP STATION JUNCTION BOX	DRAIN PUMP STATION ELEC BLDG JUCTION BOX	480 VOLT CIRCUITS
AD1-2	L	2"	DRAIN PUMP STATION JUNCTION BOX	DRAIN PUMP STATION ELEC BLDG JUNCTION BOX	120 VOLT CIRCUITS
	S	2"	DRAIN PUMP STATION JUNCTION BOX	DRAIN PUMP STATION ELEC BLDG JUCTION BOX	SPARE
	P	2"	DRAIN PUMP STATION JUNCTION BOX	DRAIN PUMP STATION ELEC BLDG JUCTION BOX	480 VOLT CIRCUITS
	P	2"	DRAIN PUMP STATION JUNCTION BOX	DRAIN PUMP STATION ELEC BLDG JUCTION BOX	480 VOLT CIRCUITS

NOTE: SEE DETAIL ON DRAWING E-14

NO.	SHEET REVISION	BY	DATE	NO.	SHEET REVISION	BY	DATE

COMMONWEALTH OF VIRGINIA
JASON A. CLARK
Lic. No. 33605
4/29/2022
PROFESSIONAL ENGINEER

WWA ASSOCIATES
ENGINEERS SURVEYORS PLANNERS
PO Box 4119 Lynchburg, VA 24502 Phone: 434.316.6080
968 Glenguin Drive, Suite 1 Charlottesville, VA 22911 Phone: 434.984.2700
www.wwassociates.net

DESIGNED BY: WKH
DRAWN BY: STAFF
DIHR BY: HFW
WWA NUMBER: 221028.00

PROJECT: WASTEWATER TREATMENT PLANT IMPROVEMENTS TOWN OF CULPEPER, VIRGINIA
TITLE: SCHEDULES
FILE NAME:
DISCIPLINE: ELECTRICAL
SCALE: H: N/A V: N/A
SET REV. NO. –
DRAWING NUMBER: E-20
DATE: 4/29/22