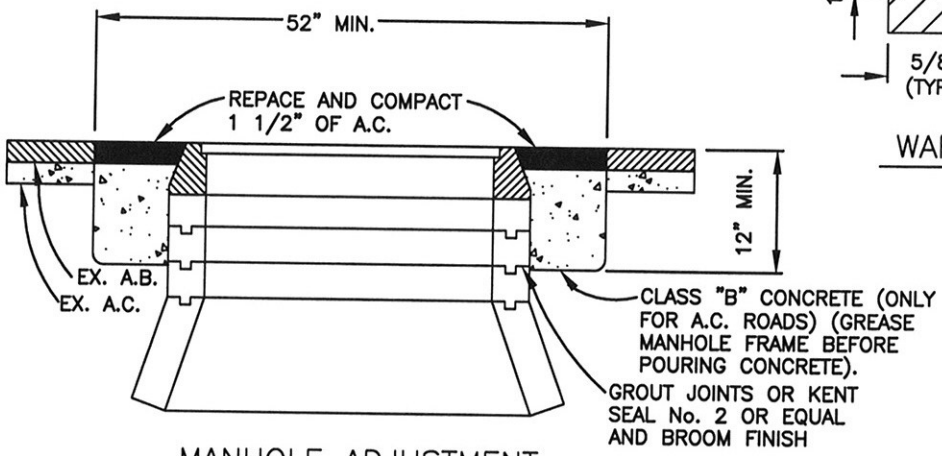

MANHOLE ADJUSTMENT

NOT TO SCALE

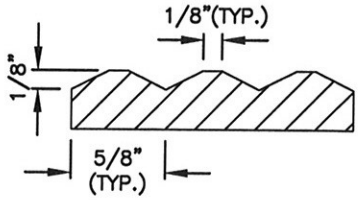

WAFFLE PATTERN

NOT TO SCALE

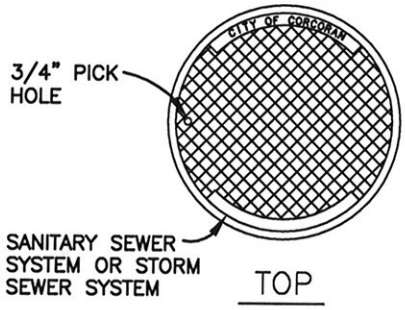

TOP

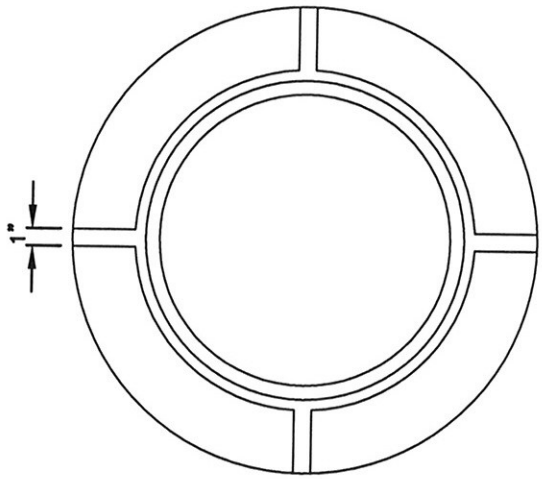

PLAN

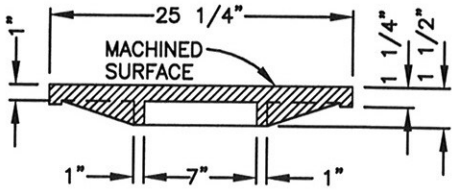

CROSS SECTION

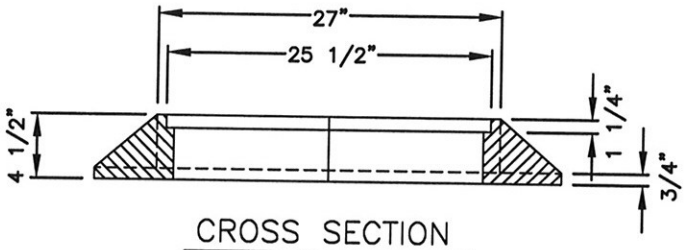

CROSS SECTION

MANHOLE FRAME

NOT TO SCALE

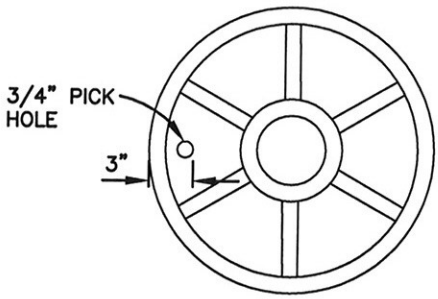

BOTTOM

MANHOLE COVER

NOT TO SCALE

CITY of CORCORAN • Department of Public Works

Standard Drawing for:

MANHOLE FRAME AND COVER

APPROVED: City Engineer — 05/19/08 Date

Revised:

SS-5